CF80 CASE IH CROSS FLOW COMBINE

A010(01) FEEDER - HOUSING [CF80P]

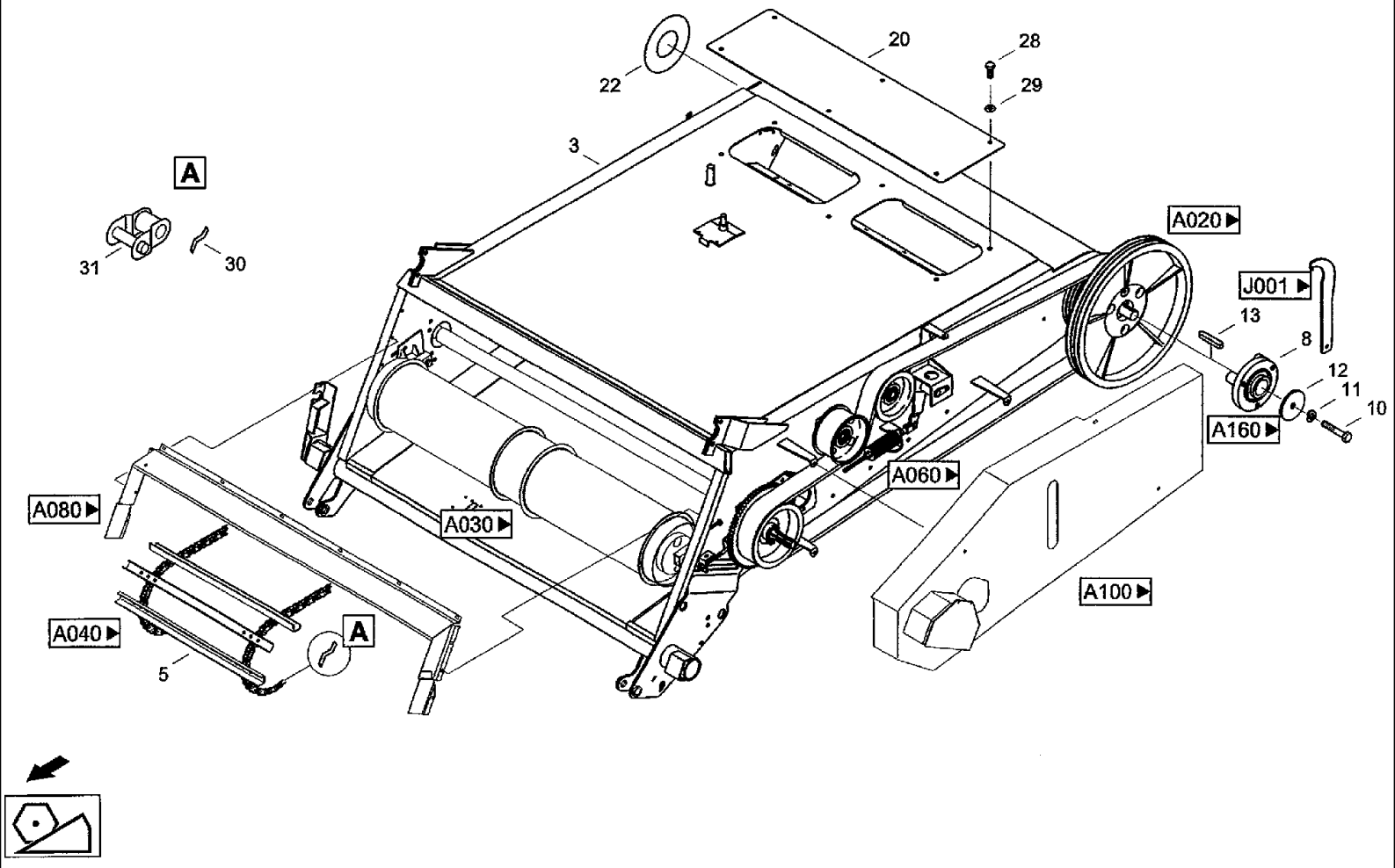

CF80 CASE IH CROSS FLOW COMBINE

A010(01) FEEDER - HOUSING [CF80P]

Ref	Part Number	Qty	Description
1	072034273	2	SHIN, Bracket 545-32000:103/04 СКОБА
3	31319445	1	HOUSING, Shaft housing 528-50303:000 КОРПУС
5	061063457	2	CONVEYOR, Belt conveyor 528-50305:000 ТРАНСПОРТЕР
6	06577011	4	PLATE, LOCKING, Locking washer M12
8			**A010(03)**
10	614-10035	1	SCREW, Hex, M10 x 35, 8.8, Full Thd,
11	06577003	1	WASHER, SPECIAL, Locking washer M10
12	060162315	1	DISC, End washer C11x50 006602385 ШАЙБА
13	03501447	1	KEY, BUCKET TOOTHRT, Flat key A1 0x8x56 DIN6885 ШПОНКА
20	061065024	1	COVER, Shaft cover 528-50300:020 КРЫШКА
22	31343605	2	PLATE, LOCKING, Spacer washer CF80-50300:022 ШАЙБА
28	614-12025	6	BOLT, Hex, M12 x 25, 8.8, Hex bolt M 12x25180401 7 8.8
29	06577060	6	WASHER, Locking washer B12
30	020497247	12	FUSE, Locking
31	06026924	4	LINK, OFFSET, Link K-213BGEKROPFT
40	614-12045	1	BOLT, Hex, M12 x 45, 8.8, Hex bolt M12x45 ISO4017 8.8
41	31318821	1	ACCUMULATOR, Spring accumulator ЭНЕРГОАККУМУЛЯТОР
42	825-1408	1	NUT, M8, Cl 8,
43	06577044	2	WASHER, SPECIAL, Locking washer B8
45	31299794	1	PROTECTION PLATE, Trim 528-50313:050 ОБШИВКА
51	614-8030	1	BOLT, Hex, M8 x 30, 8.8, Hex bolt M8X30ISO40178.8
55	614-12030	4	BOLT, Hex, M12 x 30, 8.8, Hex bolt M12x30ISO40178.8

A010(02) FEEDER - HOUSING [CF80P]

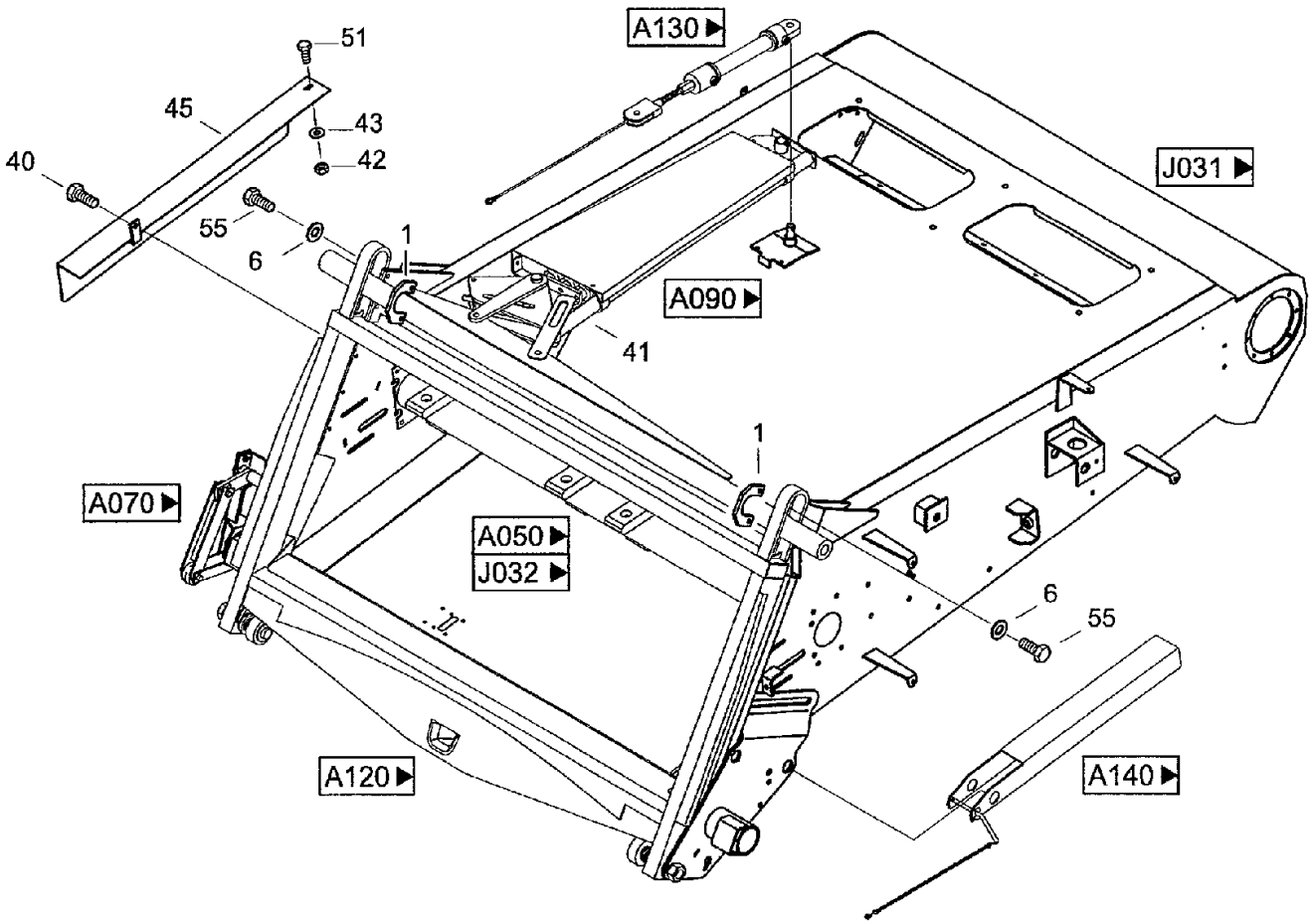

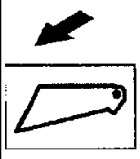

CF80 CASE IH CROSS FLOW COMBINE

A010(02) FEEDER - HOUSING [CF80P]

Ref	Part Number	Qty	Description
1	072034273	2	SHIN, Bracket
3	31319445	1	HOUSING, Shaft housing
5	061063457	2	CONVEYOR, Belt conveyor
6	06577011	4	PLATE, LOCKING, Locking washer M12
8		**A010(03)**	
10	614-10035	1	SCREW, Hex, M10 x 35, 8.8, Full Thd,
11	06577003	1	WASHER, SPECIAL, Locking washer M10
12	060162315	1	DISC, End washer C11x50
13	03501447	1	KEY, BUCKET TOOTHRT, Flat key A1 0x8x56 DIN6885
20	061065024	1	COVER, Shaft cover
22	31343605	2	PLATE, LOCKING, Spacer washer
28	614-12025	6	BOLT, Hex, M12 x 25, 8.8, Hex bolt M12x25 ISO4017 8.8
29	06577060	6	WASHER, Locking washer B12
30	020497247	12	FUSE, Locking
31	06026924	4	LINK, OFFSET, Link K-213BGEKROPFT
40	614-12045	1	BOLT, Hex, M12 x 45, 8.8, Hex bolt M12x45ISO40178.8
41	31318821	1	ACCUMULATOR, Spring accumulator
42	825-1408	1	NUT, M8, CI 8,
43	06577044	2	WASHER, SPECIAL, Locking washer B8
45	31299794	1	PROTECTION PLATE, Trim
51	614-8030	1	BOLT, Hex, M8 x 30, 8.8, Hex bolt M8x30ISO40178.8
55	614-12030	4	BOLT, Hex, M12 x 30, 8.8, Hex bolt M12x30 ISO4017 8.8

CF80 CASE IH CROSS FLOW COMBINE

A010(03) FEEDER - HOUSING [CF80K/CF80Q]

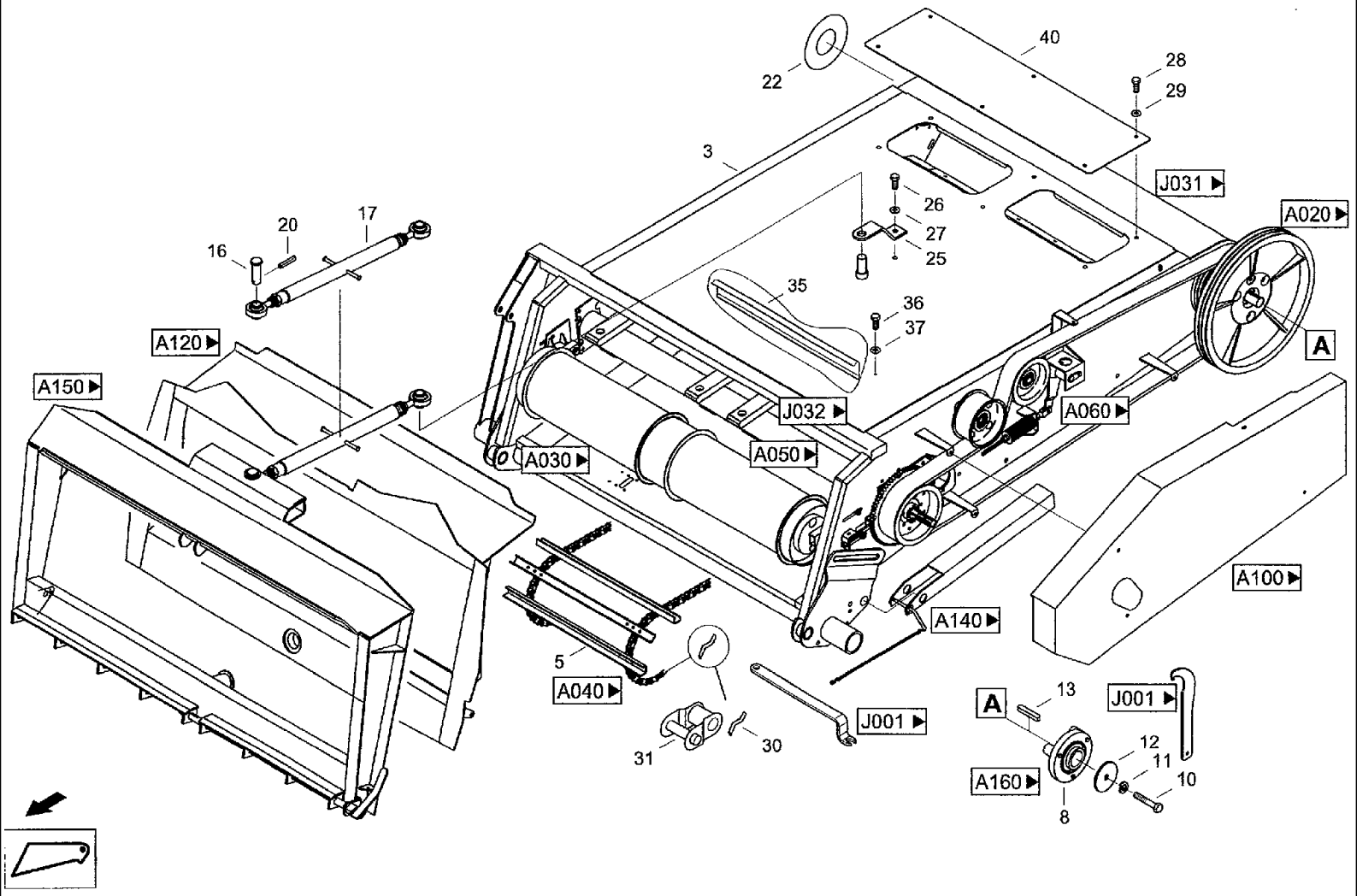

CF80 CASE IH CROSS FLOW COMBINE
A010(03) FEEDER - HOUSING [CF80K/CF80Q]

Ref	Part Number	Qty	Description
3	31316178	1	HOUSING, Shaft housing
5	061063457	2	CONVEYOR, Belt conveyor
8	31298785	1	CLUTCH, Slip clutch (31298785N1) OLD старая муфта
8	31271244N1	1	CLUTCH, Slip clutch 528-50330:000 NEW новая муфта фрикционная
10	614-10035	1	SCREW, Hex, M10 x 35, 8.8, Full Thd,
11	06577003	1	WASHER, SPECIAL, Locking washer M10
12	060162315	1	DISC, End washer C11x50
13	03501447	1	KEY, BUCKET TOOTHRT, Flat key A10x8x56 DIN6885
16	31317740	1	PIN, LARGE, Bolt
17	02803805	1	PITMAN, Upper link
20	060533542	1	SPLIT PIN/SAFETY PIN, Roll pin 8X40-A3C DIN 1481
22	31343605	2	PLATE, LOCKING, Spacer washer
25	31343590	1	HOLDER, Support
26	614-16045	1	SCREW, Hex, M16 x 45, 8.8, Bolt, Hex, M16 x 45, 8.8, IS04017
27	06562183	1	WASHER, Washer 17DIN7349ST
28	614-12025	6	BOLT, Hex, M12 x 25, 8.8, Hex bolt M12x25ISO40178.8
29	06577060	6	WASHER, Locking washer B12
30	020497247	12	FUSE, Locking
31	06026924	4	LINK, OFFSET, Link K-213BGEKROPFT
35	31347826	1	STRIP, SEALING, Sealing strip
36	614-10020	4	BOLT, Hex, M10 x 20, 8.8, Full Thd,
37	06577052	4	WASHER, SPECIAL, Locking washer B10
40	061065024	1	COVER, Shaft cover

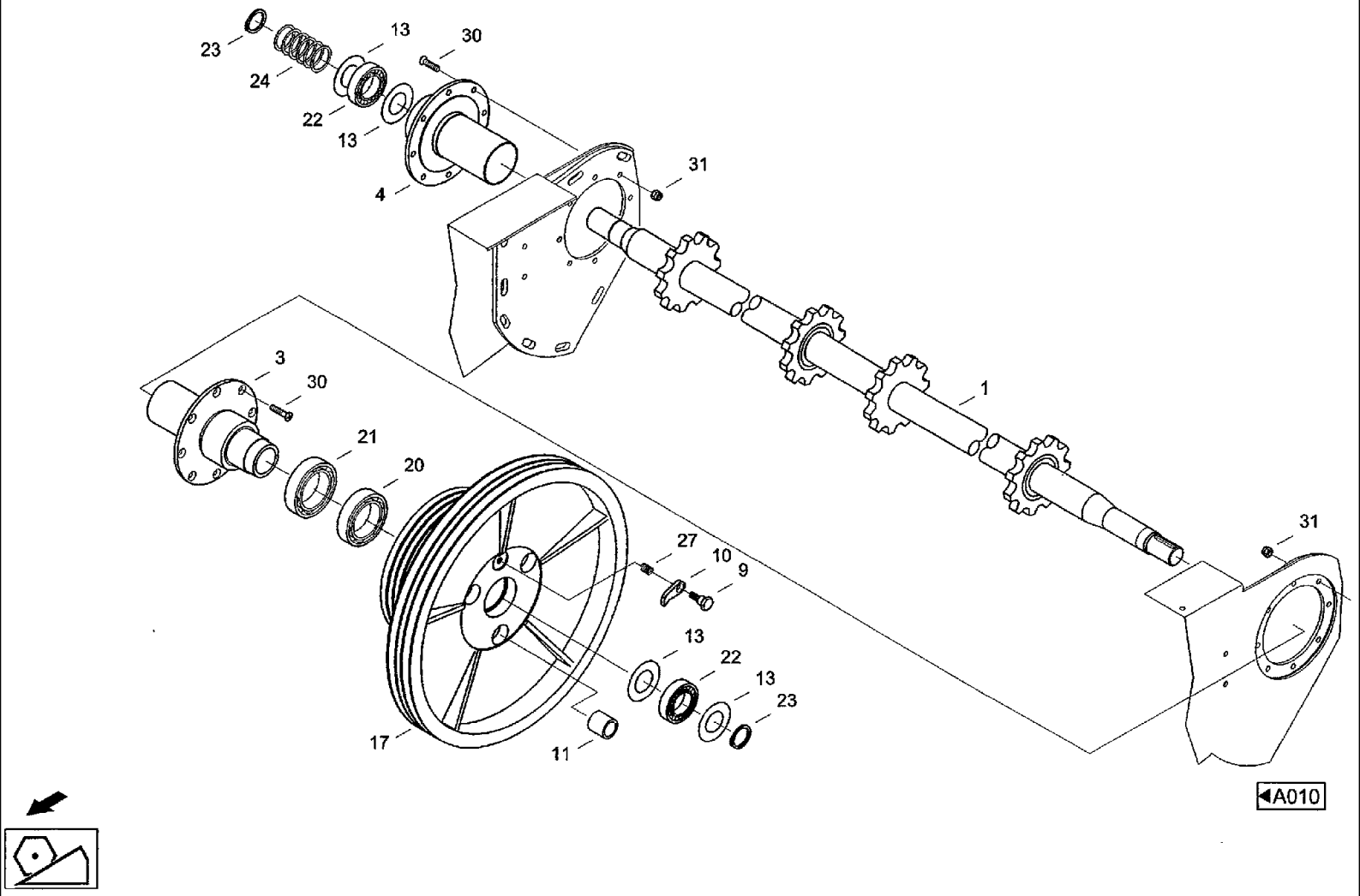
23
24
13
22
13
30
4
31
3
30
21
20
17
11
27
10
9
13
22
13
23
1
31
A010

CF80 CASE IH CROSS FLOW COMBINE

A020 FEEDER- SHAFT, TOP

Ref	Part Number	Qty	Description
1	061064827	1	SHAFT, Drive shaft 528-50302:210B ПРИВОДНОЙ ВАЛ
3	31289132	1	FLANGE, Bearing flange l 528-50302:230 ФЛАНЕЦ ЛЕВ.
4	31289157	1	FLANGE, Bearing flange r 528-50302:240 ФЛАНЕЦ ПР.
9	061064843	1	PIN, LARGE, Pivot bolt 528-50302:009 ПОВОРОТНЫЙ БОЛТ
10	061064851	1	PAWL, Pawl 528-50302:010 ЗАЩЕЛКА
11	31301694	3	BUSHING, Sleeve 528-50302:011/1 ВТУЛКА
13	060032564	4	SEAL WASHER, Seal ring 45,5x84,5x0,3 524-50102:203/04 УПЛОТН. ШАЙБА
17	31318637	1	GROOVED PULLEY, V-belt pulley 528-50302:018/1 ШКИВ
20	03680640	1	BEARING, Grooved ball bearing 6014-RS DIN625
21	003790976	1	BEARING, Grooved ball bearing 6015-RS DIN625
22	003659756	2	BEARING ASSY, Self-alinging ball bearing 1209 DIN630
23	800-1145	2	RING, SNAP, M45, Ext, Snap ring 45X1.75DIN471 FST
24	06608831	6	SHIM, Shim 45x55x1 DIN988 ШАЙБА
27	060534238	1	TORSION SPRING, Torsion spring
30	06078156	16	SCREW, Countersunk screw M10x30 DIN7991 8.8
31	006269000	16	NUT, Hex nut M10DIN6924SW16-8
32		1	528-50302:211 ВАЛ
33		4	003784898 ШПОНКА 14*9*90
34		2	524-99911:011AB ЗВЕЗДОЧКА
35		2	524-99911:011B ЗВЕЗДОЧКА

{- 528-50302:210B ПРИВОДНОЙ ВАЛ }

CF80 CASE IH CROSS FLOW COMBINE

A030 FEEDER- SHAFT, BOTTOM

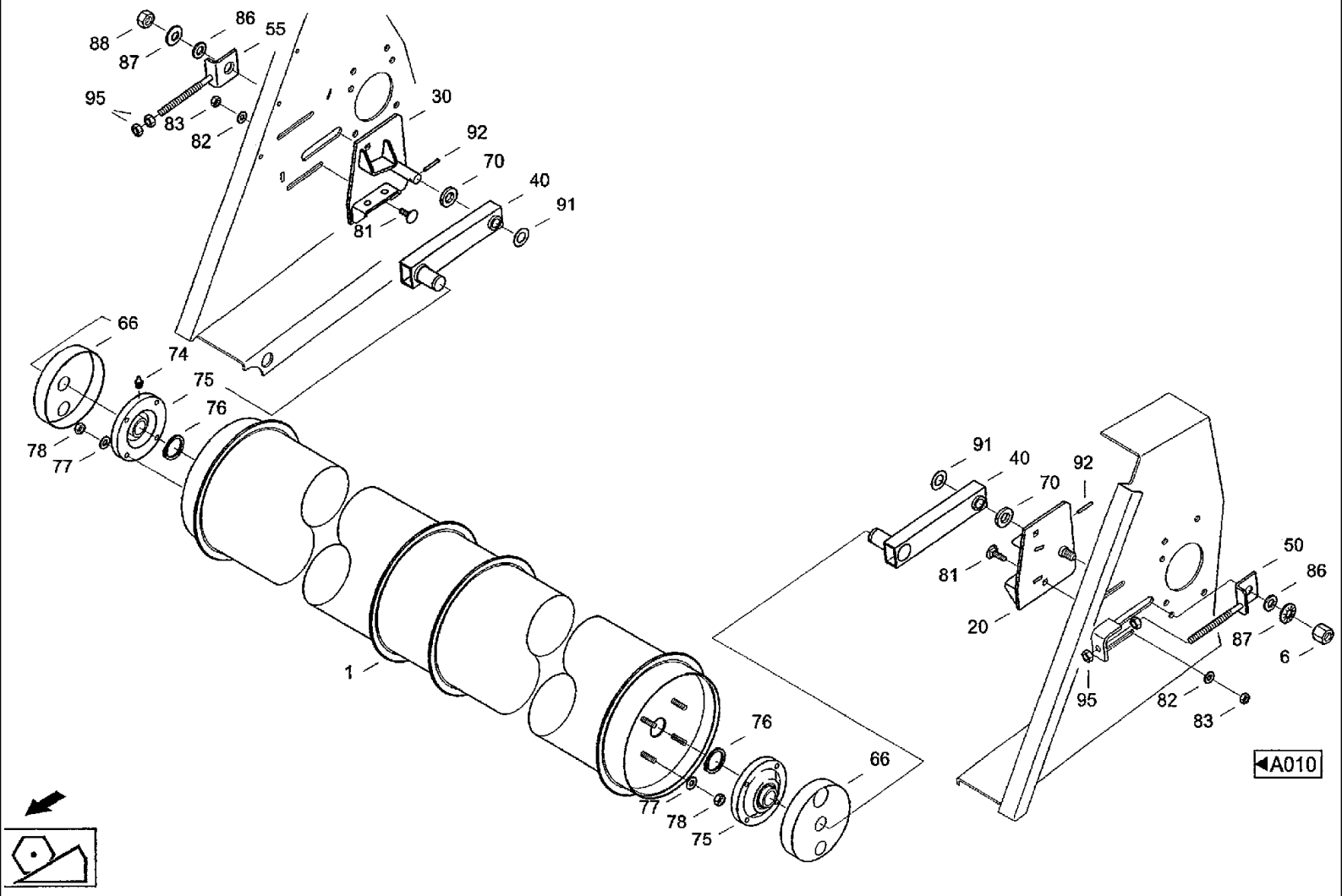

CF80 CASE IH CROSS FLOW COMBINE

A030 FEEDER- SHAFT, BOTTOM

Ref	Part Number	Qty	Description
1	31301661	1	SHAFT, Guide shaft 528-50304:100/1 ВЕДУЩИЙ ВАЛ
6	31301700	1	NUT, Nut 528-50304:006 гайка
20	061064964	1	PLATE, Clamping plate l 528-50304:800 КРЕПЕЖНАЯ ПЛИТА ЛЕВ.
30	061064980	1	PLATE, Clamping plate r 528-50304:800-01 КРЕПЕЖНАЯ ПЛИТА ПР.
40	31301604	2	ROD, CONNECTING, Rocker 528-50304:700 БАЛАНСИР
50	31289614	1	ANGLE, Clamp bracket l 528-50304:500 ЗАЖИМНОЙ УГОЛЬНИК ЛЕВ.
55	31289630	1	ANGLE, Clamp bracket r 528-50304:550 ЗАЖИМНОЙ УГОЛЬНИК ПР.
66	31301557	2	HOOD, Trim 528-50304:660 ОБШИВКА.
70	060033934	2	WASHER, Washer 22x40x6 RST37-2 528-50104:008/04 шайба
74	03640746	1	NIPPLE, LUBE, Grease nippel BM8X1 DIN71412
75	060501978	2	CARRIER, BEARING, Flange bearing housing FWS30U MIT KEGELS CHMIERNIP
76	800-1130	2	RING, SNAP, M30, Ext, Snap ring 30x1,5DIN471 FST
78	832-46410	8	NUT, LOCK, M10 x 1.5, Cl 8, Hex nut 10DIN9808
81	07755576	4	SCREW, Flat-round-head screw M1 0x25 DIN603 8.8
82	06577052	4	WASHER, SPECIAL, Locking washer B10
83	825-1410	4	NUT, M10, Cl 8,
86	021431125	2	WASHER, Washer MDW-N14510-18x32x 4-RST
87	06577093	2	WASHER, LOCK, Locking washer M16
88	825-1416	1	NUT, M16, Cl 8,
91	060523950	2	WASHER, Washer MDW-N14510-22x40x 1-RST
92	06402730	2	PIN, SPLIT (COTTER), Splint pin 5x32 DIN94 ST
95	825-1412	4	NUT, M12, Cl 8, Hex nut M12 IS04032 8
77	895-11010	8	WASHER, M10 x 20 x 2, Washer 10.5DIN125ST 646981 шайба
78		4	ПЛАСТИНА ПРУЖИННАЯ
79		2	ПЛАСТИНА ПРИЖИМНАЯ
40A		1	528-50304:700-01 БАЛАНСИР

A040 FEEDER- BELT CONVEYOR

ТРАНСПОРТЕР 528-50305:000

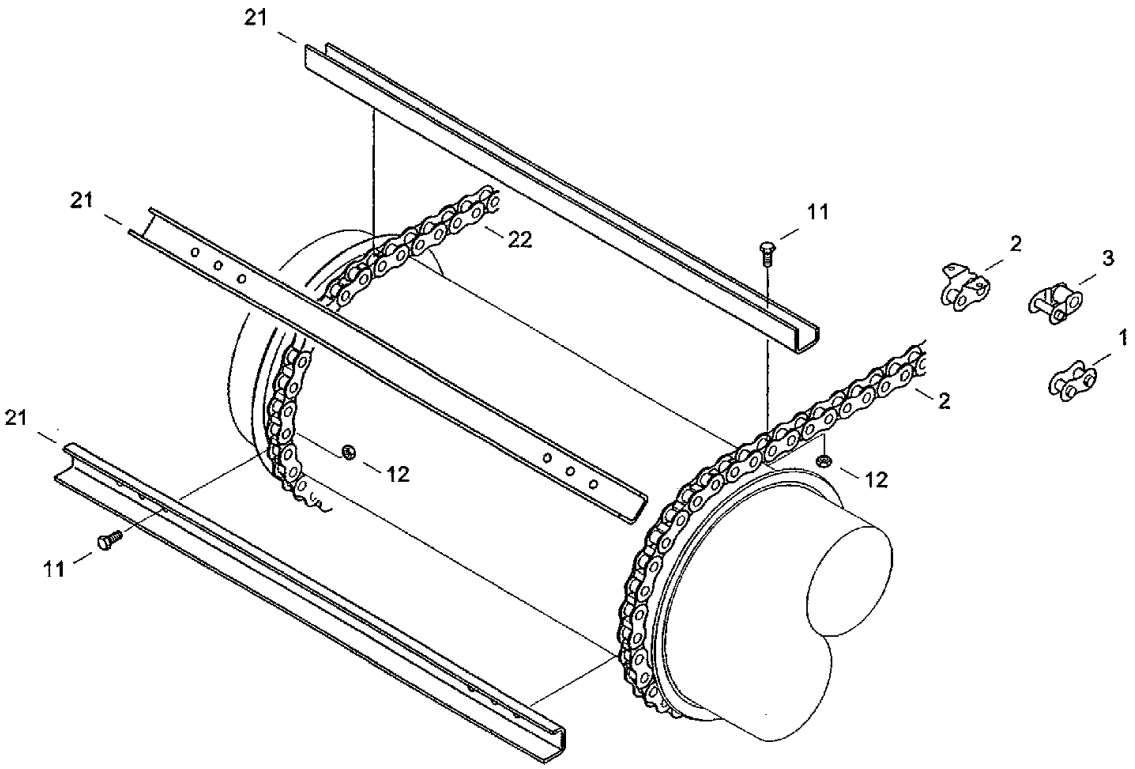

A010

CF80 CASE IH CROSS FLOW COMBINE

A040 FEEDER- BELT CONVEYOR

Ref	Part Number	Qty	Description
1	06026932	1	LINK, CONNECTING, Chain connector E213B-1
2	06026916	1	LINK, CHAIN, Link E11-213BF.BEFESTIG.
3	06026924	1	LINK, OFFSET, Link K-213B GEKROPFT
11	614-8018	116	SCREW, Hex, M8 x 18, 8.8, Full Thd, Hex bolt M8x18ISO40178.8
12	832-46408	116	NUT, LOCK, M8 x 1.25, Cl 8,
21	31288533	29	SLAT, Toothed bracket 528-50305:001 ЗУБЧАТЫЙ УГОЛОК
22	061063465	2	CHAIN (AGRICULTURE), Roller chains

CF80 CASE IH CROSS FLOW COMBINE

A050(01) FEEDER SUPPORT FRAME [CF80P]

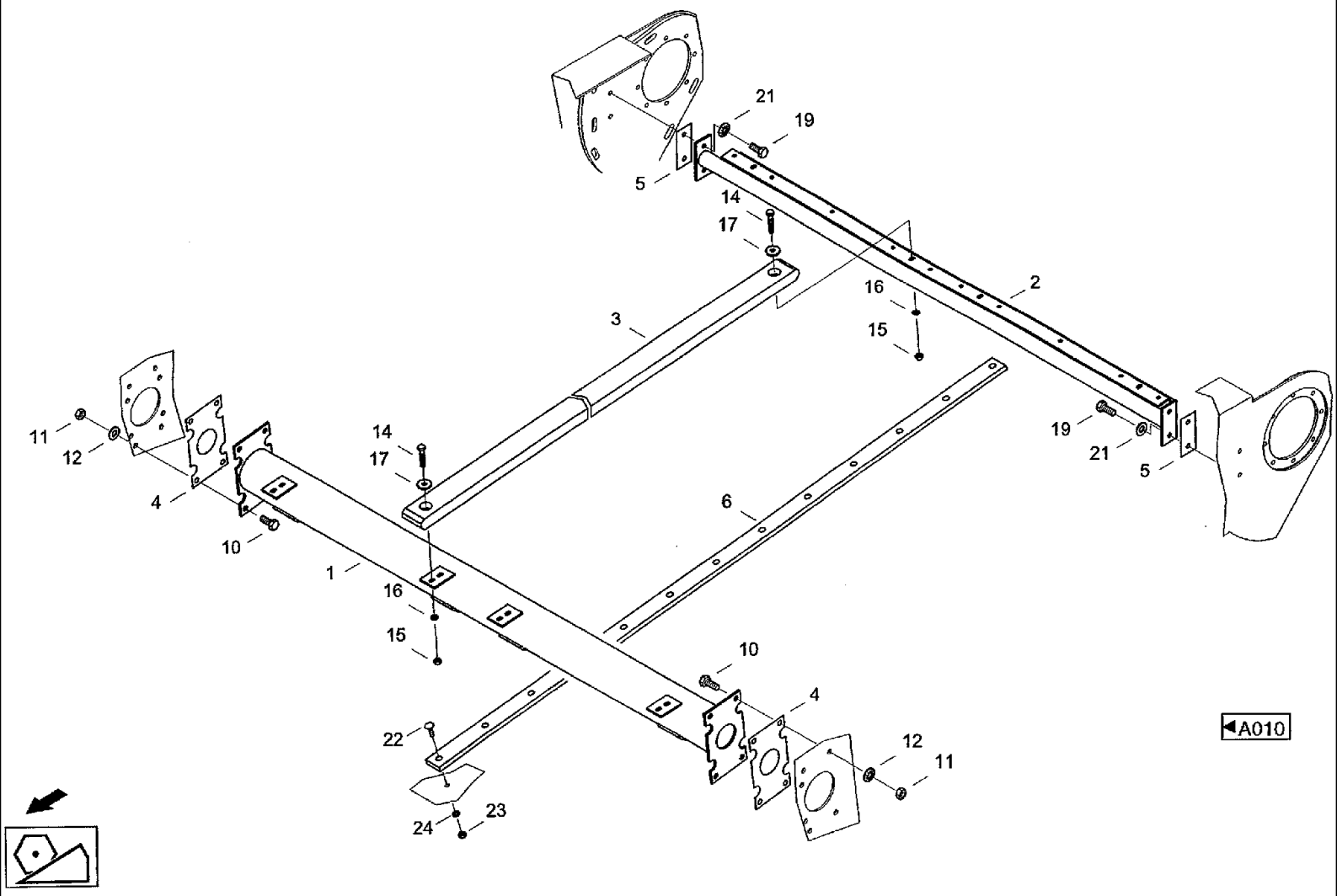

CF80 CASE IH CROSS FLOW COMBINE

A050(01) FEEDER SUPPORT FRAME [CF80P]

Ref	Part Number	Qty	Description
1	061063512	1	HOLDER, Support strut V 528-50306:100 ОПОРНЫЙ РАСКОС
2	061063754	1	HOLDER, Support strut 528-50306:200 ОПОРНЫЙ РАСКОС
3	061063520	4	BAR, Support bar 528-50306:003 ОПОРНАЯ ПЛАНКА
4	060202935	2	BLOCK, Shim 5549-0406:015 прокладка
5	060034365	1	BLOCK, Shim 524-50106:004/04 ПРОКЛАДКА
6	31312648	4	SLAT, Support strip 528-50306:006 прокладка
10	614-12025	8	BOLT, Hex, M12 x 25, 8.8, Hex bolt M12X25ISO40178.8
11	825-1412	8	NUT, M12, Cl 8, Hex nut M12IS040328
12	06577011	8	PLATE, LOCKING, Locking washer M12
14	614-8035	8	BOLT, Hex, M8 x 35, 8.8, Hex bolt M8x35 ISO4017 8.8
15	832-46408	8	NUT, LOCK, M8 x 1.25, Cl 8,
16	895-11008	8	WASHER, M8 x 16 x 1.6, Washer 8.4DIN125ST
17	06502638	8	WASHER, Washer R9 DIN440 100HV
19	614-10025	4	BOLT, Hex, M10 x 25, 8.8, Full Thd, Hex bolt M 10x251804017 8.8
21	06577052	4	WASHER, SPECIAL, Locking washer B10
22	006017683	52	SCREW, Lens-head screw M6x12DIN854.8
23	825-1406	52	NUT, M6, Cl 8,
24	893-11006	52	WASHER, Ext Tooth, M6, Toothed washer A6.4 DIN6797 FST

CF80 CASE IH CROSS FLOW COMBINE

A050(02) FEEDER SUPPORT FRAME [CF80Q]

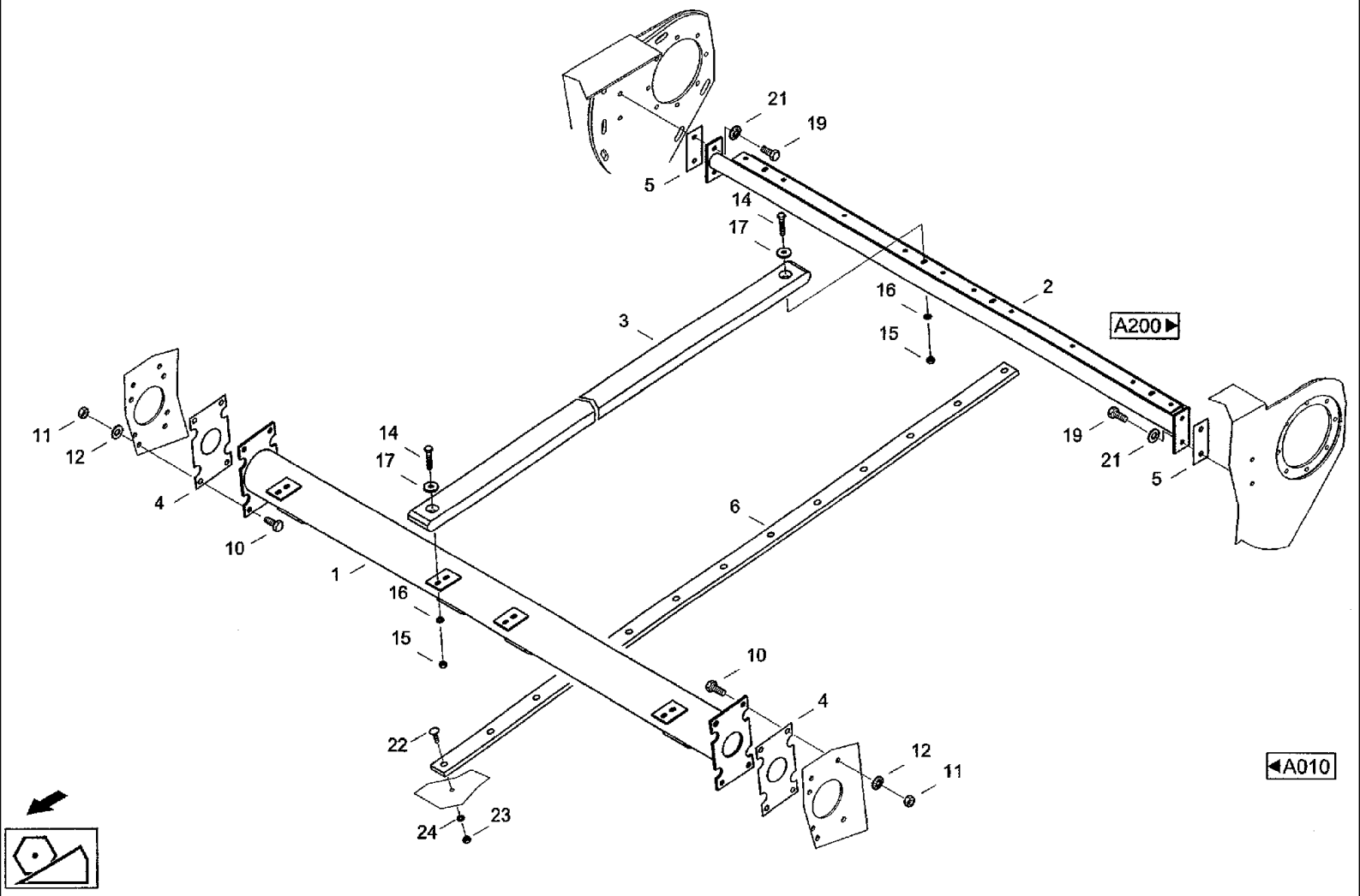

CF80 CASE IH CROSS FLOW COMBINE

A050(02) FEEDER SUPPORT FRAME [CF80Q]

Ref	Part Number	Qty	Description
1	061063512	1	HOLDER, Support strut V
2	061063754	1	HOLDER, Support strut
3	061063520	4	BAR, Support bar
4	060202935	2	BLOCK, Shim
5	060034365	1	BLOCK, Shim
6	31317757	4	SLAT, Support strip
10	614-12025	8	BOLT, Hex, M12 x 25, 8.8, Hex bolt M12x25IS040178.8
11	825-1412	8	NUT, M12, Cl 8, Hex nut M12ISO40328
12	06577011	8	PLATE, LOCKING, Locking washer M12
14	614-8035	8	BOLT, Hex, M8 x 35, 8.8, Hex bolt M8X35ISO40178.8
15	832-46408	8	NUT, LOCK, M8 x 1.25, Cl 8,
16	895-11008	8	WASHER, M8 x 16 x 1.6, Washer 8,4 DIN125 ST
17	06502638	8	WASHER, Washer R9DIN440100HV
19	614-10025	4	BOLT, Hex, M10 x 25, 8.8, Full Thd, Hex bolt M1 0x2513040178.8
21	06577052	4	WASHER, SPECIAL, Locking washer B10
22	006017683	52	SCREW, Lens-head screw M6x12 DIN85 4.8
23	825-1406	52	NUT, M6, Cl 8,
24	893-11006	52	WASHER, Ext Tooth, M6, Toothed washer A6,4 DIN6797 FST

CF80 CASE IH CROSS FLOW COMBINE

A060(01) FEEDER- OUTPUT MEMBER

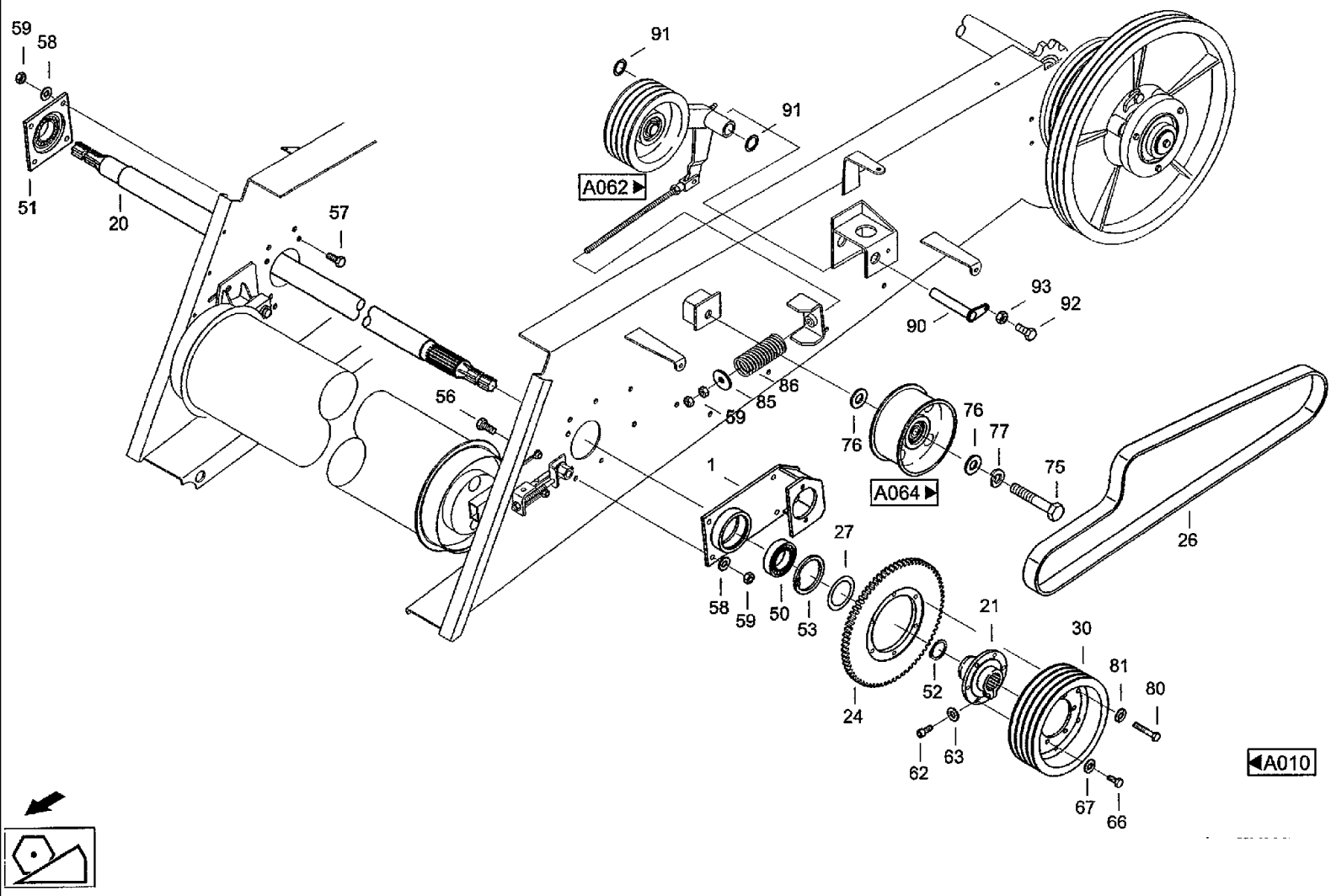

CF80 CASE IH CROSS FLOW COMBINE

A060(01) FEEDER- OUTPUT MEMBER

Ref	Part Number	Qty	Description
1	31325402	1	HOUSING, BEARING, Bearing bracket 528-50307:300/1 СТОЙКА ПОДШИПНИКА
20	061063594	1	SHAFT, Shaft 528-50307:020-01 ВАЛ
21	060203044	1	HUB, Hub 528-50307:100 СТУПИЦА
24	31319316	1	GEAR, WHEEL, Spur gear 528-50307:024 ТОРЦЕВОЕ КОЛЕСО
26	31318645	1	BELT, Composite v-belt 4HB4800KLA+/-10
27	060209218	2	RING, THRUST, Thrust washer 5549-0407:027/04 ОПОРНАЯ ШАЙБА
30	31319308	1	GROOVED PULLEY, V-belt pulley 528-50307:030 ШКИВ
50	060524590	1	BEARING, Self-alinging ball bearing 2210-2RS-TV
51	060524605	1	CARRIER, BEARING, Flange bearing housing FWS50U MIT KEGELS CHMIERN.B
52	800-1148	1	RING, SNAP, M48, Ext, Snap ring 48x1,75DIN471 FST
53	800-2190	1	RING, SNAP, M90, Int, Snap ring 90x3 DIN472 FST
56	614-12035	4	BOLT, Hex, M12 x 35, 8.8, Full Thd, Hex bolt M12x35IS040178.8
57	614-12045	4	BOLT, Hex, M12 x 45, 8.8, Hex bolt M12X45ISO40178.8
58	06577011	8	PLATE, LOCKING, Locking washer M12
59	825-1412	10	NUT, M12, Cl 8, Hex nut M12 ISO4032 8
62	864-10025	2	SCREW, Hex Soc Hd, M10 x 25, 8.8, Cheese-head screw M10x25DIN9128.8
63	003794168	2	PLATE, LOCKING, Locking washer Z10
66	614-10030	6	BOLT, Hex, M10 x 30, 8.8,
67	06577003	6	WASHER, SPECIAL, Locking washer M10
75	614-20100	1	BOLT, Hex, M20 x 100, 8.8, Full Thd, Hex bolt M20x100ISO40178.8
76	06513183	2	WASHER, Washer 21 DIN6916
77	06577116	1	PLATE, LOCKING, Locking washer M20
80	614-10065	6	BOLT, Hex, M10 x 65, 8.8, Full Thd, Hex bolt M10x65ISO40178.8
81	06577003	6	WASHER, SPECIAL, Locking washer M10
85	072064221	1	WASHER, Washer 545-55840:004/04 шайба
86	003784004	1	ШПОНКА 14*9*70

CF80 CASE IH CROSS FLOW COMBINE

A060(02) FEEDER- OUTPUT MEMBER

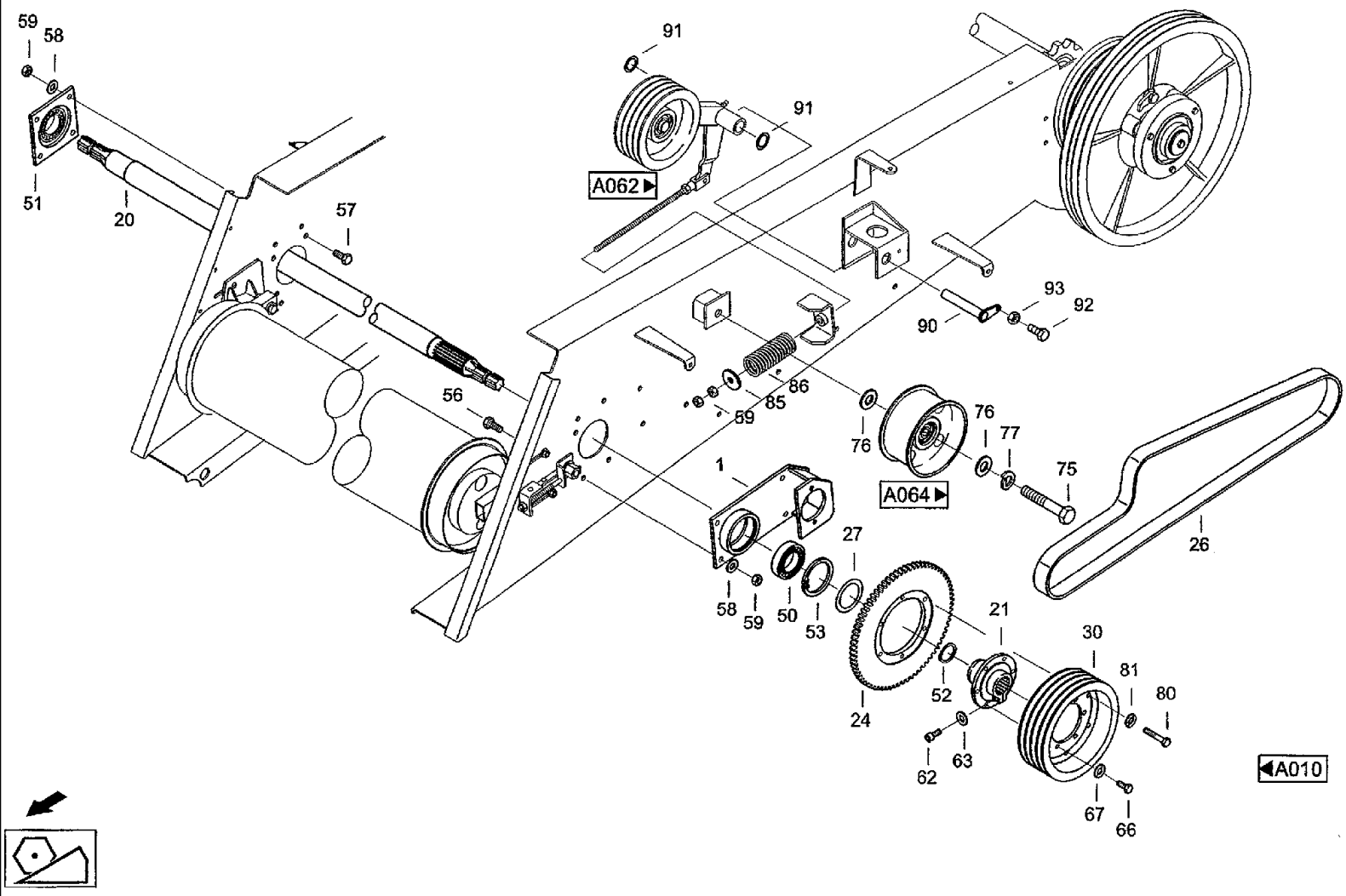

CF80 CASE IH CROSS FLOW COMBINE

A060(02) FEEDER- OUTPUT MEMBER

Ref	Part Number	Qty	Description
86	006713238	1	SPRING, COMPRESSION, Pressure spring C8x55x11,5 д027-20.00.007 пружина
90	31348755	1	PIN, LARGE, Pin 528-50307:090 шкворень
91	06623806	2	WASHER, Shim 30x42x2 DIN988 шайба
92	614-8025	1	BOLT, Hex, M8 x 25, 8.8,
93	825-1408	1	NUT, M8, Cl 8,

A062 FEEDER- IDLER

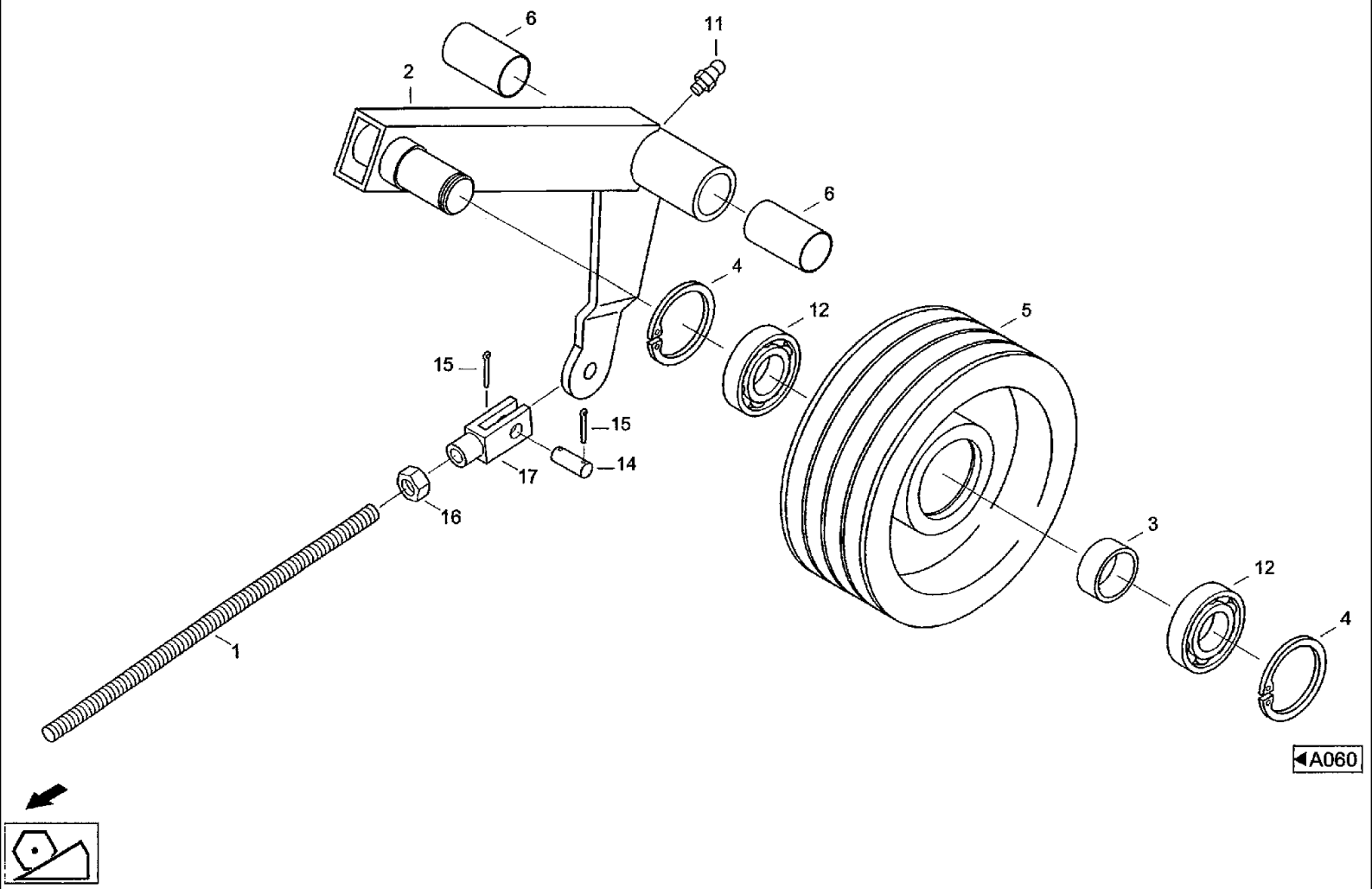

CF80 CASE IH CROSS FLOW COMBINE

A062 FEEDER- IDLER

Ref	Part Number	Qty	Description
1	072063784	1	THREADED ROD, Threaded pin 545-55840:002/04 УСТАНОВОЧНЫЙ ВИНТ
2	31348730	1	ROD, CONNECTING, Rocker 528-50307:220 БАЛАНСИР
3	31318725	1	BUSHING, Spacer ring 528-50307:203 распорное кольцо
4	800-2162	2	RING, SNAP, M62, Int, Snap ring 62x2 DIN472 FST
5	061004777	1	TIGHTENER SHEAVE, Inner tension pulley 527-50307:302/03 НАТЯЖНОЙ РОЛИК
6	01309801	2	BUSHING, Sleeve LD30/34x40BREIT B09 528-50307:206 втулка
11	03629381	1	NIPPLE, LUBE, Grease nippel BM6 DIN71412
12	03652050	2	BEARING, BALL, Grooved ball bearing 6206-RS DIN625
14	003798854	1	PIN, LARGE, Bolt B12H1 1x45x32 DIN1443
15	733-3220	2	PIN, SPLIT (COTTER), M3.2 x 20, Splint pin 3,2x20 DIN94 ST
16	825-1412	1	NUT, M12, Cl 8, Hex nut M12 ISO4032 8
17	97058011	1	CRADLE, Yoke G12x24 DIN71752 9S20K TWA66A-0704:002 ВИЛЬЧАТАЯ ГОЛОВКА

A064 FEEDER- TAIL PULLEY

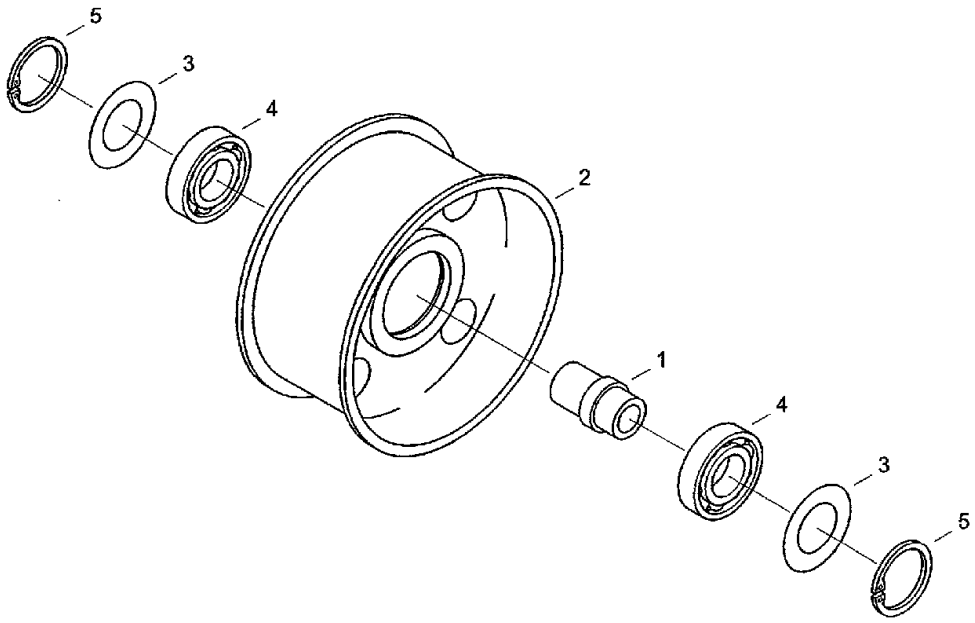

A060

CF80 CASE IH CROSS FLOW COMBINE

A064 FEEDER- TAIL PULLEY

Ref	Part Number	Qty	Description
1	060037800	1	BUSHING, Sleeve 524-50307:301 втулка
2	061004793	1	TIGHTENER SHEAVE, Idler 527-50307:402 натяжной ролик
3	020215465	2	SEAL WASHER, Seal ring 35,3x61x0,3 5550-4001:013/04 уплотнительная шайба
4	03652050	2	BEARING, BALL, Grooved ball bearing 6206-RS DIN625
5	800-2162	2	RING, SNAP, M62, Int, Snap ring 62x2 DIN472 FST

A070(01) FEEDER- EQUIPOTENTIAL BONDING [CF80P]

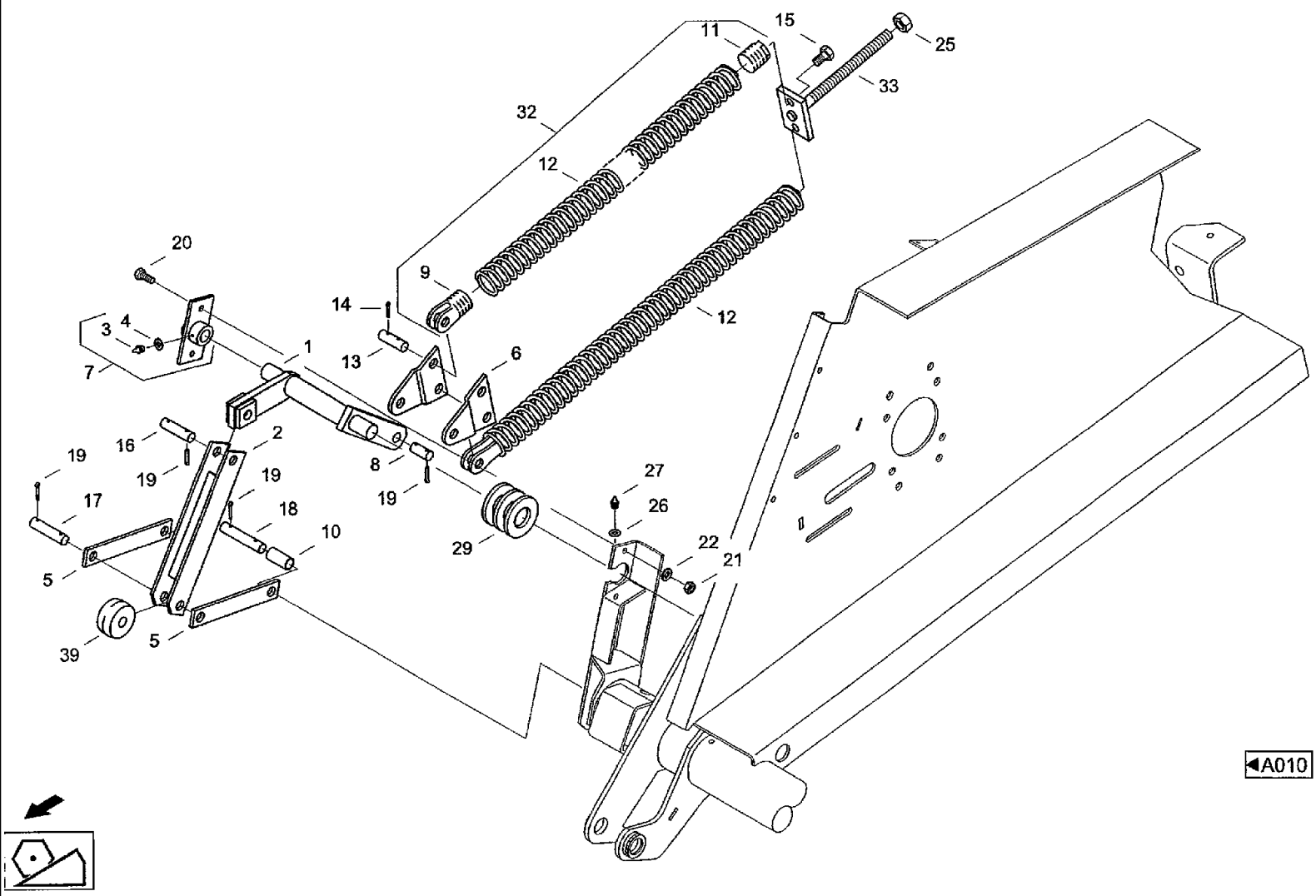

CF80 CASE IH CROSS FLOW COMBINE

A070(01) FEEDER- EQUIPOTENTIAL BONDING [CF80P]

Ref	Part Number	Qty	Description		
29	895-11024	5	WASHER, M24 x 44 x 4, Washer25 DIN125 ST	спу-8	
32	20335640	2	SPRING, TENSION, Tension spring		
33	060034910	1	ROD, ADJUSTMENT, Adjusting spindle	524-50108:300/04	установочный винт
39	060035003	1	ROLLER, SHIFTER, Roller	524-50108:009/04	ролик

A070(02) FEEDER- EQUIPOTENTIAL BONDING [CF80P]

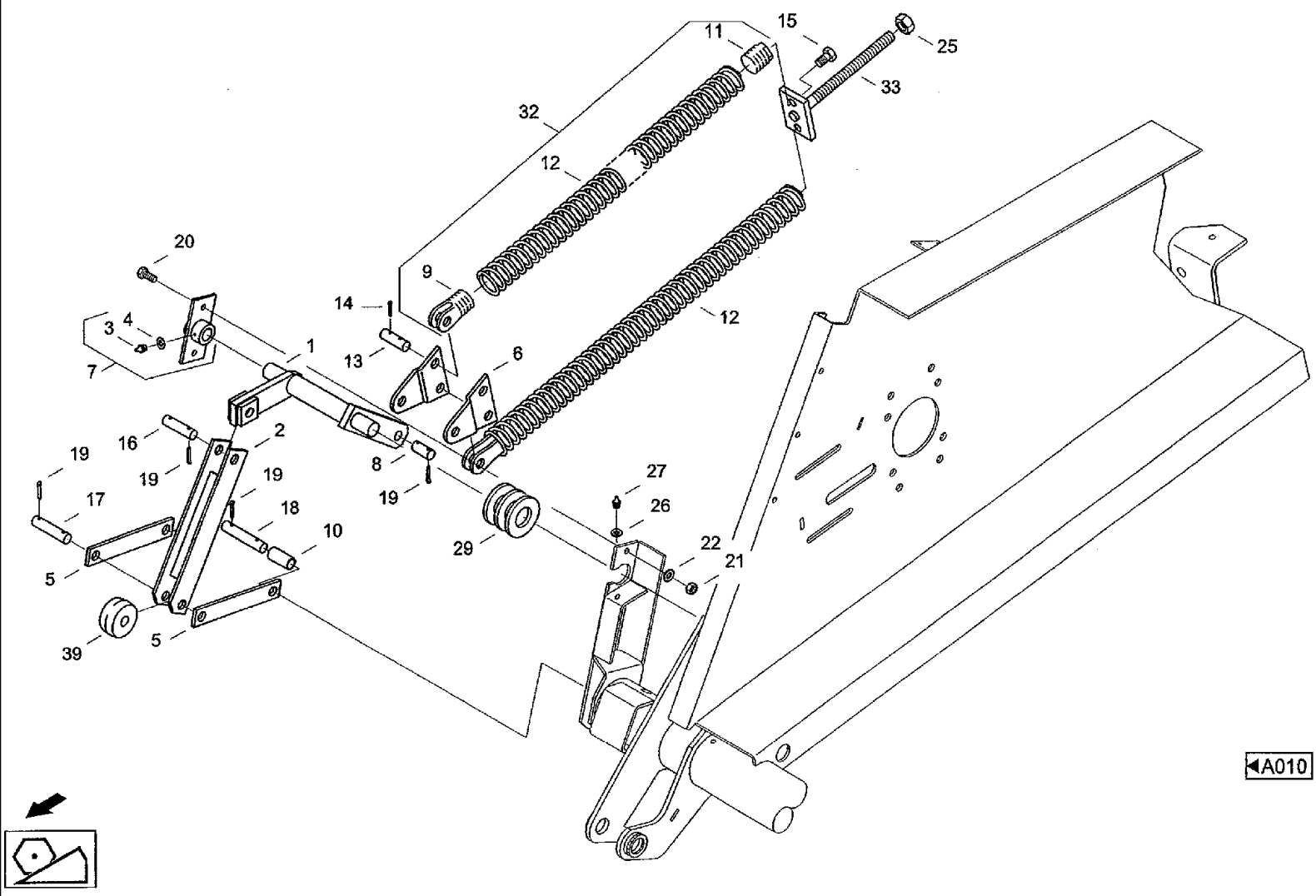

CF80 CASE IH CROSS FLOW COMBINE

A070(02) FEEDER- EQUIPOTENTIAL BONDING [CF80P]

Ref	Part Number	Qty	Description
1	31289784	1	LEVERSHAFT, Lever shaft 528-50308:100 вал рычага
2	060034888	1	BRAKE, Conrod 524-50108:200/04 связь
3	03637285	1	NIPPLE, LUBE, Grease nippel AM6 DIN71412
4	895-11006	1	WASHER, M6, Washer 6.4DIN125ST 647912 шайба
5	060034968	2	LEVER, ROCKER, Rocker 524-50108:500 балансир
6	061026331	2	SHIN, Strap 527-50308:006/03 накладка
7	061026323	1	BEARING, Bearing RECHTS 527-50308:700/04 подшипник
8	007634094	1	PIN, LARGE, Bolt B16H11x35x28-ST-A3C DIN1444
9	20335616	2	END FITTING, Adapter 5307-0010:009 ввертыш
10	060035011	1	SPACER, Spacer sleeve 524-50108:010/04 распорная втулка
11	20335624	2	END FITTING, Adapter 5307-0010:011 ввертыш
12	20335632	2	SPRING, TENSION, Spring 5307-0010:012/03пружина
13	003781122	2	PIN, LARGE, Bolt B12H11X50-ST-A3C DIN1443
14	733-3220	4	PIN, SPLIT (COTTER), M3.2 x 20, Splint pin 3,2x20 DIN94 ST
15	614-12035	2	BOLT, Hex, M12 x 35, 8.8, Full Thd, Hex bolt M12x35 ISO4017 8.8
16	007611030	1	PIN, LARGE, Bolt B16H11X60-ST-A3C DIN1443
17	007611096	1	PIN, LARGE, Bolt B16H11x70DIN1443
18	060162557	1	PIN, LARGE, Bolt B16H11X85-ST-A3C DIN1443
19	06401520	7	PIN, SPLIT (COTTER), Splint pin 4x25 DIN94 ST
20	614-8020	2	BOLT, Hex, M8 x 20, 8.8, Hex bolt M8X20ISO40178.8
21	829-1408	2	NUT, M8, Cl 10, Hex nut M8ISO403210
22	06577044	2	WASHER, SPECIAL, Locking washer B8
25	829-1416	1	NUT, M16, Cl 10, Hex nut M16 ISO4032 10
26	895-11006	1	WASHER, M6, Washer 6,4 DIN 125 ST 647912 шайба
27	03637285	1	NIPPLE, LUBE, Grease nippel AM6 DIN71412

CF80 CASE IH CROSS FLOW COMBINE

A080 FEEDER- SEAL [CF80P]

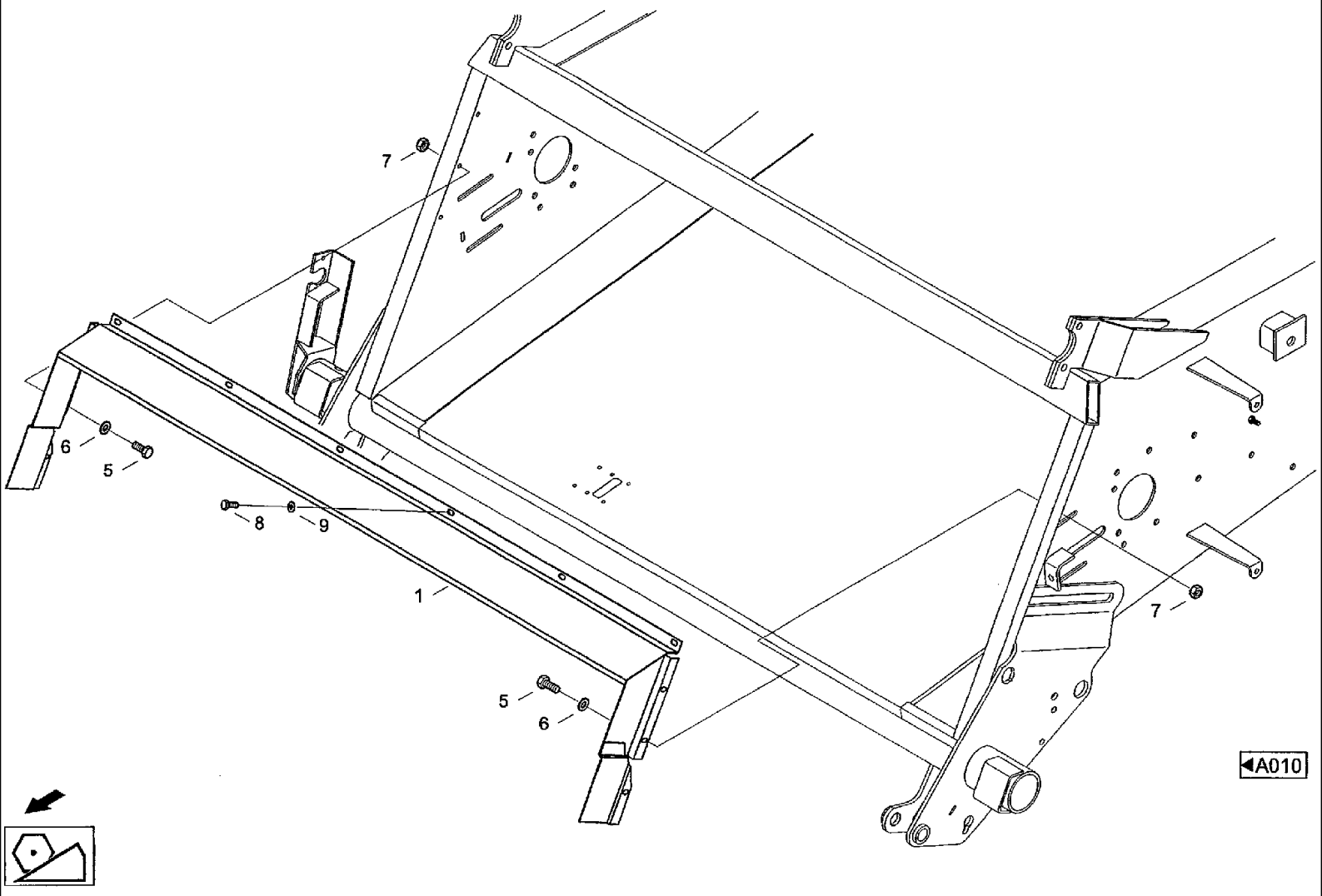

CF80 CASE IH CROSS FLOW COMBINE

A080 FEEDER- SEAL [CF80P]

Ref	Part Number	Qty	Description
1	061003405	1	COVER, Sealing hood 527-50310:100/03 ЗАЩИТНЫЙ КОЛПАК
5	614-8020	6	BOLT, Hex, M8 x 20, 8.8, Hex bolt M8x20 ISO4017 8.8
6	06577028	6	WASHER, SPECIAL, Locking washer M8
7	829-1408	6	NUT, M8, Cl 10,
8	614-6010	6	BOLT, Hex, M6 x 10, 8.8, Full Thd, Hex boltM6X10ISO40178.8
9	06577124	6	WASHER, Locking washer B6

CF80 CASE IH CROSS FLOW COMBINE

A090(01) FEEDER- SPRING ACCUMULATOR [CF80P]

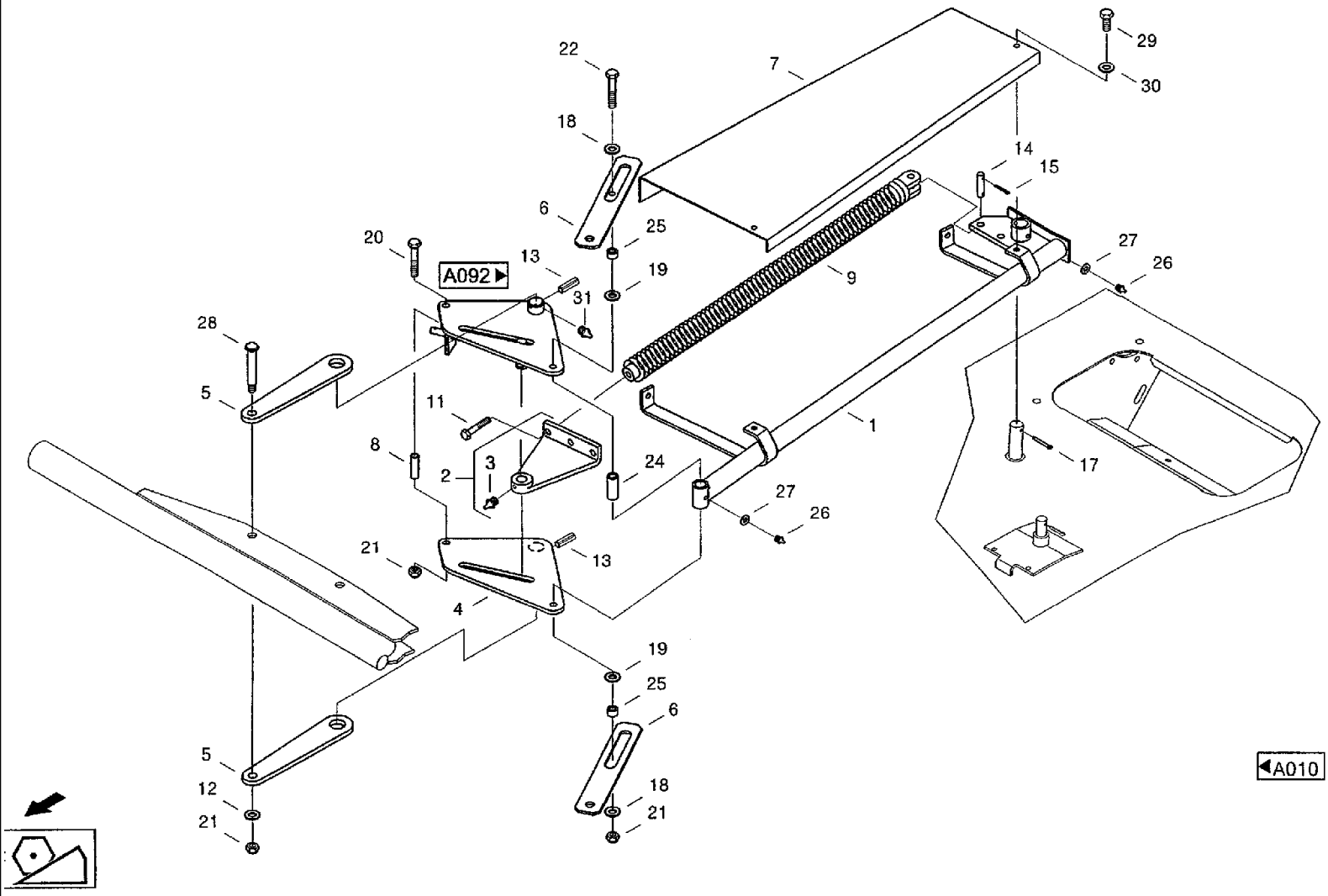

CF80 CASE IH CROSS FLOW COMBINE

A090(01) FEEDER- SPRING ACCUMULATOR [CF80P]

Ref	Part Number	Qty	Description
1	31299046	1	ROD, CONNECTING, Conrod 528-50311:100 соединительная штанга
2	061026436	1	YOKE, LINKAGE, Balance 527-50309:200a балансир
3	03637285	1	NIPPLE, LUBE, Grease nippel AM6 DIN71412
4	31318766	1	SHIN, Strap UNTEN 527-50311:400/1 накладка
5	31318782	2	STAY, Stay 527-50311:500 распорка
6	060035325	2	STAY, Stay 524-50109:006/04
7	31299054	1	COVER, Cap 528-50311:007 КРЫША
8	060035341	1	SLEEVE, Sleeve 524-50109:008/04 гильза
9	20335640	3	SPRING, TENSION, Tension spring
11	060512683	3	SCREW, Hex bolt M1 2x140 DIN933 8.8
12	895-11016	2	WASHER, M16 x 30 x 3, Washer 17DIN125ST
13	838-5540	2	PIN, M5 x 40, Slotted, Roll pin 5x40 DIN 1481 FST
14	003781122	3	PIN, LARGE, Bolt B12H11x50-ST-A3C DIN1443
15	733-3220	6	PIN, SPLIT (COTTER), M3.2 x 20, Splint pin 3,2x20 DIN94 ST
17	06403797	1	PIN, SPLIT (COTTER), Splint pin 3,2x20 DIN94 ST
18	21423270	2	WASHER, Washer MDW-N14510-14x45x6
19	21422952	2	WASHER, Washer MDW-N14510-22x50x 6-RST
20	814-12080	1	BOLT, Hex, M12 x 80, 8.8,
21	832-46412	4	NUT, LOCK, M12 x 1.75, Cl 8, Hex nut VM12 DIN980 8
22	814-12120	1	BOLT, Hex, M12 x 120, 8.8, Hex bolt M12x120IS040148.8
24	060035390	1	BUSHING, Sleeve 524-50109:024/04 гильза
25	060035366	2	BUSHING, Sleeve 524-50109:025/04 втулка
26	03617056	2	NIPPLE, LUBE, Grease nippel AM8x1 DIN71412
27	895-11008	2	WASHER, M8 x 16 x 1.6, Washer 8.4DIN125ST 647912 шайба
28	061026428	2	SCREW, Screw 527-50309:028/04 винт

CF80 CASE IH CROSS FLOW COMBINE

A090(02) FEEDER- SPRING ACCUMULATOR [CF80P]

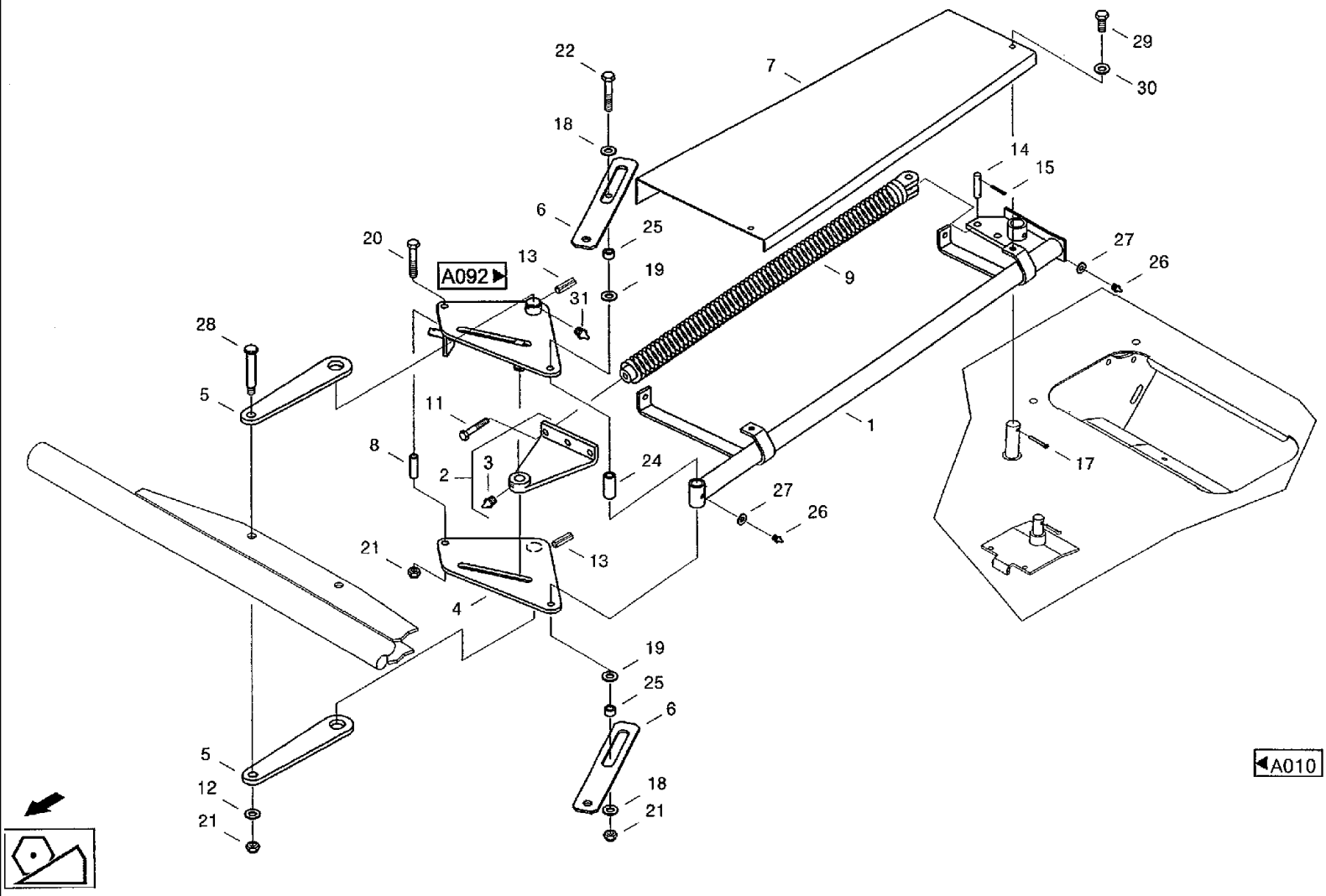

CF80 CASE IH CROSS FLOW COMBINE

A090(02) FEEDER- SPRING ACCUMULATOR [CF80P]

Ref	Part Number	Qty	Description
29	614-8020	4	BOLT, Hex, M8 x 20, 8.8, Hex bolt M8x20 ISO4017 8.8
30	06577044	4	WASHER, SPECIAL, Locking washer B8
31	03637285	2	NIPPLE, LUBE, Grease nippel AM6 DIN71412

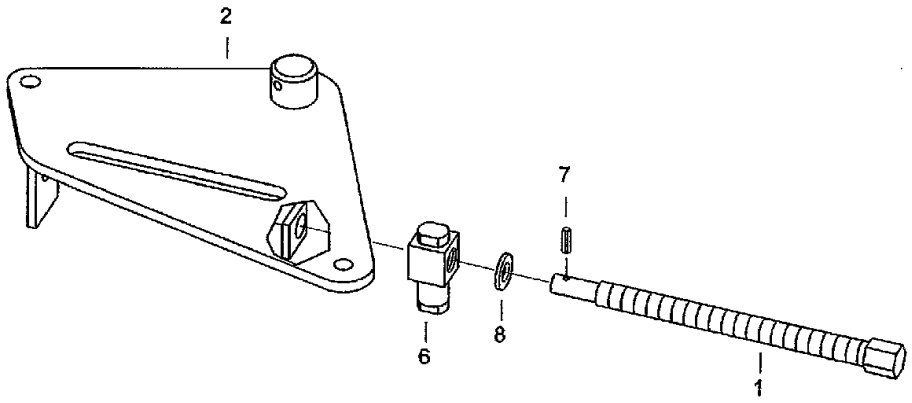

◀A090

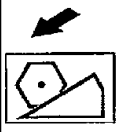

CF80 CASE IH CROSS FLOW COMBINE

A092 FEEDER- STRAP, TOP [CF80P]

Ref	Part Number	Qty	Description
1	061026477	1	SPINDLE, Spindle 527-50309:310/04 шпиндель
2	31318758	1	SHIN, Strap 527-50311:320/1 накладка
6	061064064	1	SHIN, Joint 527-50309:306/04 шарнир
7	06142003	1	PIN, Notched dowel 4x25/26 DIN 1473 ST
8	895-11012	1	WASHER, M12 x 24 x 2.5, Washer 13DIN125ST

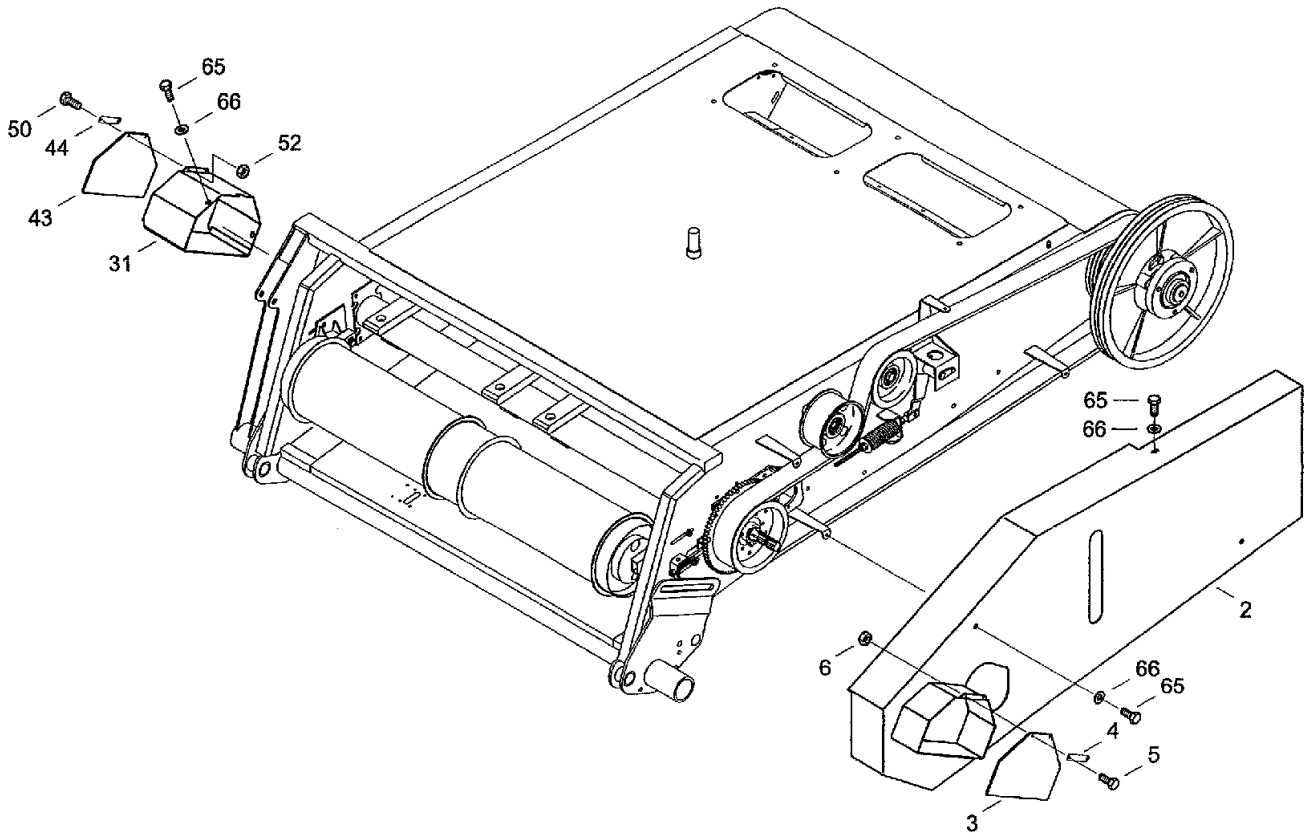
65
66
50
44
52
43
31
65
66
2
6
66
65
4
5
3
A010

CF80 CASE IH CROSS FLOW COMBINE

A100 FEEDER- GUARD

Ref	Part Number	Qty	Description
2	31325644	1	GUARD, Guard I 528-50312:110/1 ЗАЩИТА
3	31291352	1	COVER, Rubber cover 5549-0410:016 РЕЗИНОВАЯ КРЫШКА
4	31291360	1	BAND, Clamp, strip 5549-0410:017 зажимная полоса
5	614-6014	2	BOLT, Hex, M6 x 14, 8.8, Full Thd, Hex bolt M6x14 ISO4017 8.8
6	832-10406	2	NUT, M6 x 1, Cl 8, Hex nut M6 DIN982 8
31	31292433	1	PROTECTION PLATE, Guard hood 5549-0410:031 ЗАШИТНЫЙ КОЖУХ
43	31291352	1	COVER, Rubber cover
44	31291360	1	BAND, Clamp, strip
50	614-6018	2	BOLT, Hex, M6 x 18, 8.8, Full Thd, Hex bolt M6x18 ISO4017 8.8
52	832-10406	2	NUT, M6 x 1, Cl 8, Hex nut M6 DIN982 8
65	614-8016	6	BOLT, Hex, M8 x 16, 8.8,
66	06577044	6	WASHER, SPECIAL, Locking washer B8

A120(01) FEEDER- PENDULUM FRAME [CF80P]

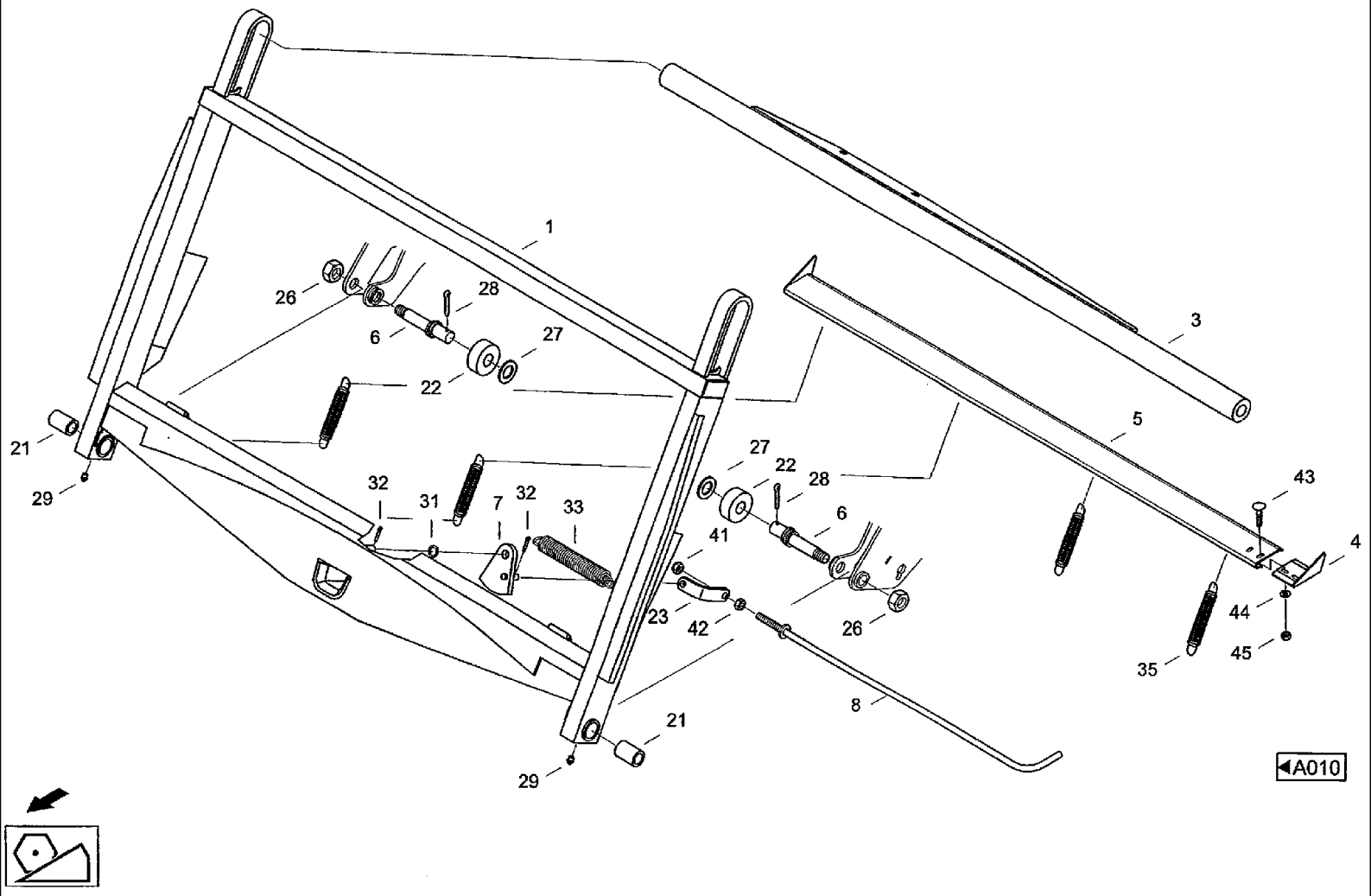

CF80 CASE IH CROSS FLOW COMBINE

A120(01) FEEDER- PENDULUM FRAME [CF80P]

Ref	Part Number	Qty	Description
1	061063352	1	FRAME, Frame 528-50315:100 РАМКА
3	061063432	1	BEAM ASSY., Pendulum beam 528-50315:300A балансировочная балка
4	060036190	1	COVER, Sealing angle 524-50115:400/04 уплотняющий уголок
5	061004873	1	SEAL, Sealing profile 527-50315:500/03 уплотнительный профиль
6	060036301	2	ARCH, Adjusting bolt 524-50115:000A регулировочный болт
7	060036342	1	LATCH, PEDALS, Latching device 524-50115:700/04 запорное устройство
8	31289165	1	ARRESTER, Lock 528-50315:800 фиксатор
21	060036158	2	BUSHING, Spacer bushing 524-50115:021/04 распорная втулка
22	060036166	2	ROLLER, SHIFTER, Roller 524-50115:022/04 ролик
23	060036174	1	ANGLE BAR, Angle 524-50115:023/04 уголок
26	825-13424	2	NUT, M24 x 2, Cl 8, Hex nut M24x2 ISO8673 8
27	006509603	2	WASHER, Washer 33-A3C DIN 126
28	06404162	2	PIN, SPLIT (COTTER), Splint pin 8x50 DIN94 ST
29	03617056	2	NIPPLE, LUBE, Grease nippel AM8x1 DIN71412
31	895-11016	1	WASHER, M16 x 30 x 3, Washer 17DIN125ST
32	06400423	2	PIN, SPLIT (COTTER), Splint pin 4x28 DIN94 ST
33	006700506	1	SPRING, TENSION, Tension spring A2,5x28x16A1
35	006735532	4	SPRING, TENSION, Tension spring B2x18x40AA2
41	832-46412	1	NUT, LOCK, M12 x 1.75, Cl 8, Hex nut VM12 DIN980 8
42	825-1412	1	NUT, M12, Cl 8, Hex nut M12 IS04032 8
43	07753092	2	SCREW, Flat-round-head screw M8x20 DIN603 8.8
44	06577044	2	WASHER, SPECIAL, Locking washer B8
45	825-1408	2	NUT, M8, Cl 8,

A120(02) FEEDER- PENDULUM FRAME [CF80Q]

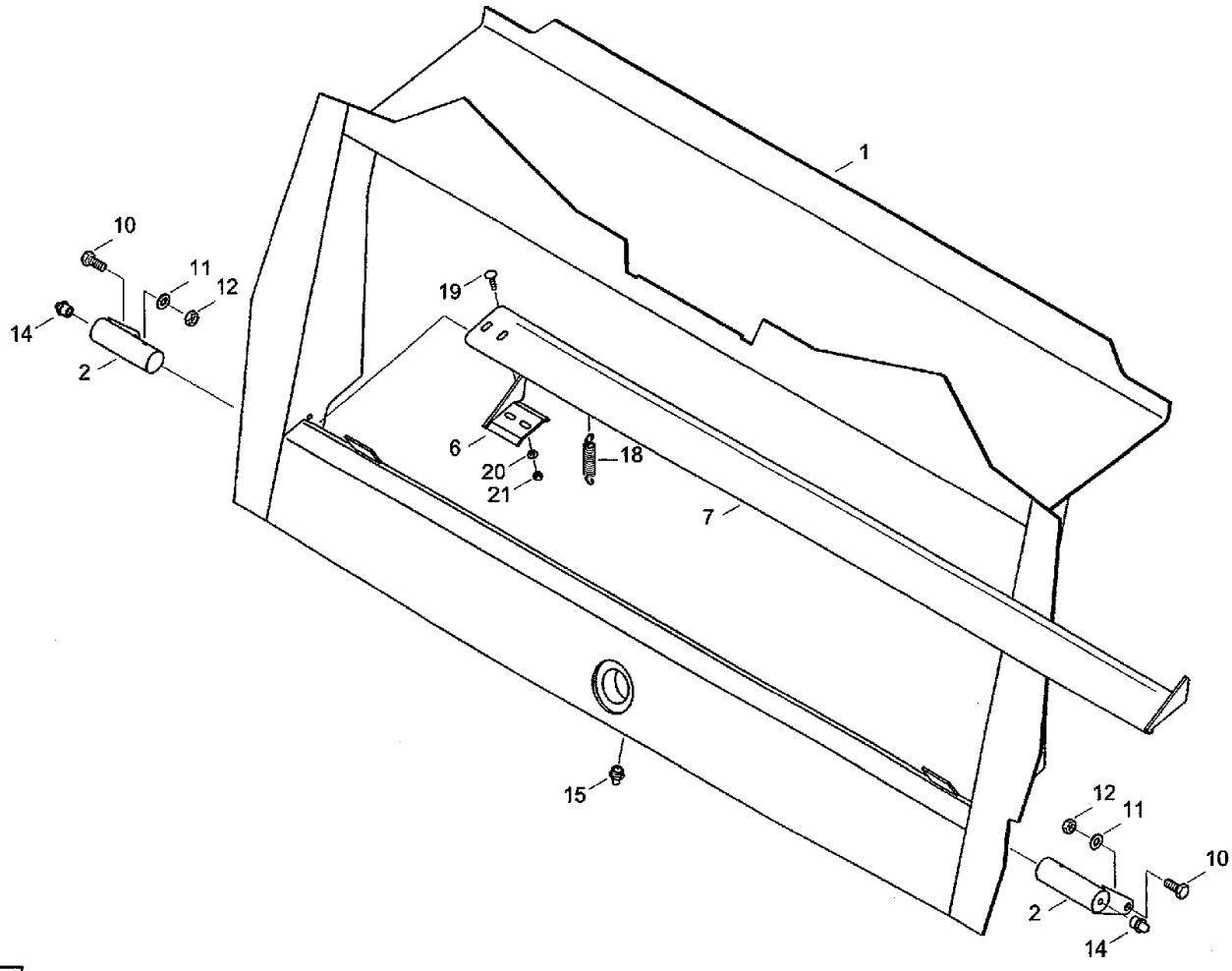

CF80 CASE IH CROSS FLOW COMBINE

A120(02) FEEDER- PENDULUM FRAME [CF80Q]

Ref	Part Number	Qty	Description
1	31312752	1	FRAME, Frame
2	31315240	2	PIN, LARGE, Bearing pin
6	060036190	1	COVER, Sealing angle
7	061004873	1	SEAL, Sealing profile
10	614-12030	2	BOLT, Hex, M12 x 30, 8.8, Hex bolt M12x30ISO40178.8
11	06577011	2	PLATE, LOCKING, Locking washer M12
12	825-1412	2	NUT, M12, Cl 8, Hex nut M12 ISO4032 8
14	03617064	2	NIPPLE, LUBE, Grease nippel AM10X1 DIN71412
15	03617056	1	NIPPLE, LUBE, Grease nippel AM8x1 DIN71412
18	006735532	4	SPRING, TENSION, Tension spring B2x18x40AA2
19	07753092	2	SCREW, Flat-round-head screw M8x20 DIN603 8.8
20	06577044	2	WASHER, SPECIAL, Locking washer B8
21	825-1408	2	NUT, M8, Cl 8,

CF80 CASE IH CROSS FLOW COMBINE

A130 FEEDER- LOCK [CF80P]

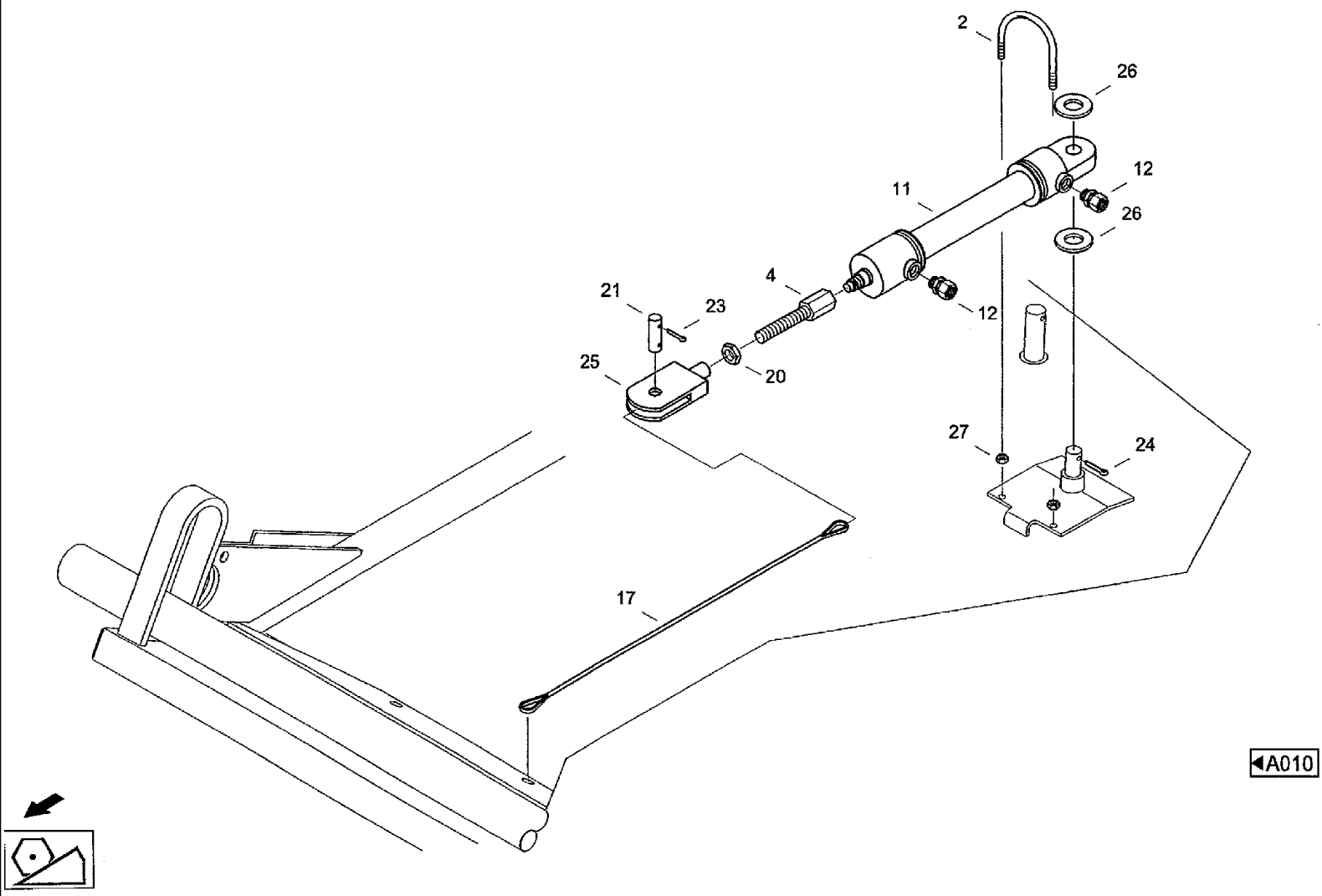

CF80 CASE IH CROSS FLOW COMBINE

A130 FEEDER- LOCK [CF80P]

Ref	Part Number	Qty	Description
2	061065073	1	BOW, Bracket 528-50323:002 скоба
4	060129234	1	CLEVIS, Fork 524-76304:000/04 вилка
11	021007207	1	CYLINDER ASSY., Cylinder 61-40/25x160
12	060532927	2	ADAPTER, Male connector GE8-L/M 1 6x1 ,5-ED/OMD
17	003799043	1	ROPE, Rope 1N-ZNK-8xO,460-PKF DIN3088 003799043.00 трос
20	829-23416	1	NUT, Thin, M16 x 1.5, Cl 05, Hex nut M 16x1,51808675 05
21	07645048	1	PIN, LARGE, Bolt B16H1 1x50x38 DIN1443ST палец
23	06401520	2	PIN, SPLIT (COTTER), Splint pin 4x25 DIN94 ST
24	06403797	1	PIN, SPLIT (COTTER), Splint pin 6,3x45 DIN94 ST
25	003799107	1	CRADLE, Yoke G16x64-FG DIN71752 вильчатая головка
26	895-11020	2	WASHER, M20 x 37 x 3, Washer 21 DIN125ST шайба
27	825-1408	4	NUT, M8, Cl 8,

CF80 CASE IH CROSS FLOW COMBINE

A140 FEEDER- CYLINDER LOCKING DEVICE

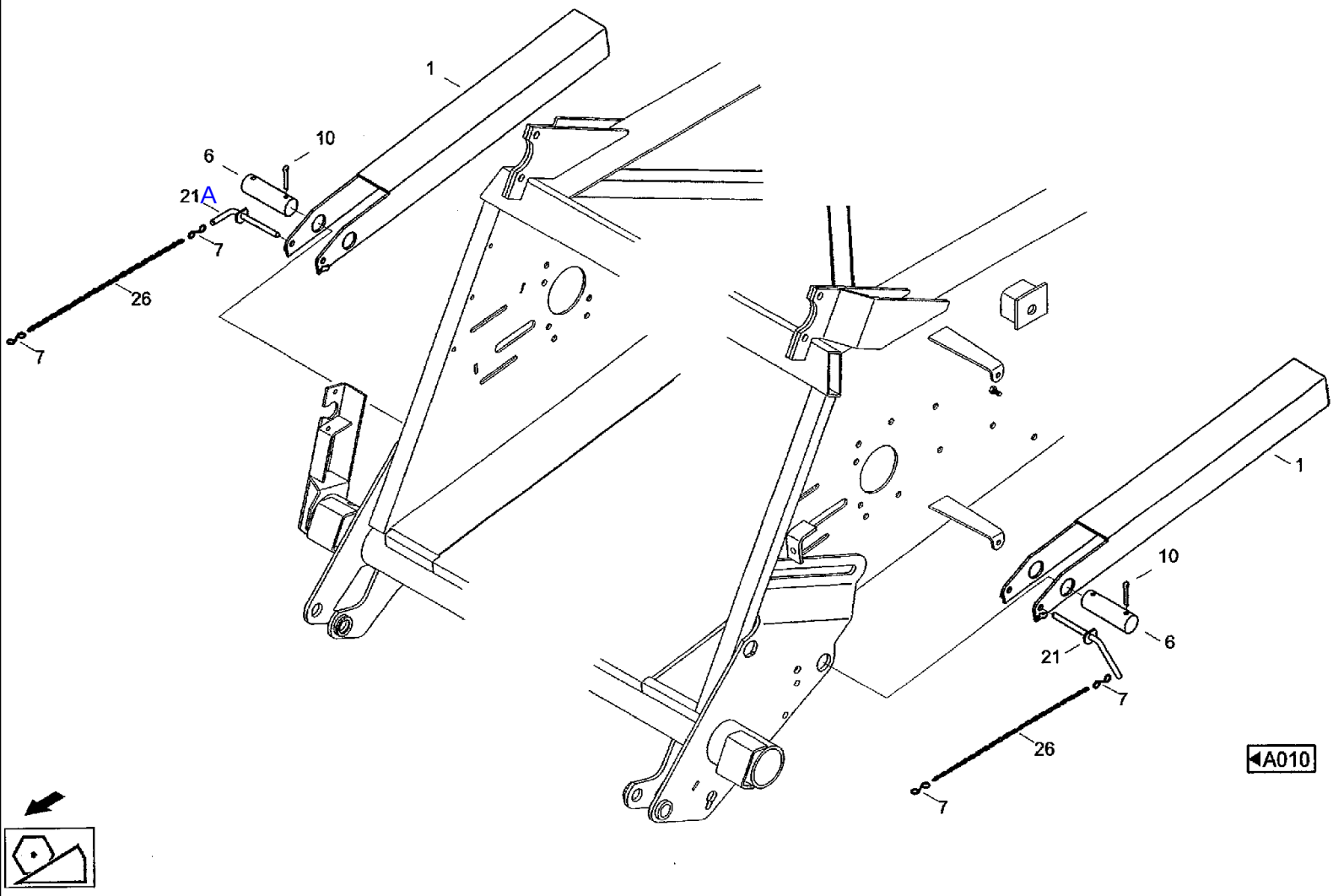

CF80 CASE IH CROSS FLOW COMBINE

A140 FEEDER- CYLINDER LOCKING DEVICE

Ref	Part Number	Qty	Description
1	061065040	1	LATCH, Latch 528-50325:100A стопор
6	061065081	1	PIN, LARGE, Bolt 528-50325:006 палец
7	06800220	2	HOOK, S-type hook 9,5/23x3
10	06404162	2	PIN, SPLIT (COTTER), Splint pin 8x50 DIN94 ST
21	061065065	1	PIN, LARGE, Detent 528-50325:201 чека
26	06832027	1	CHAIN (AGRICULTURE), Knotted chain 1Kg2DIN5686
21A		1	чека пр. 528-50325:301

A150 FEEDER- SUPPORTING FRAME [CF80Q]

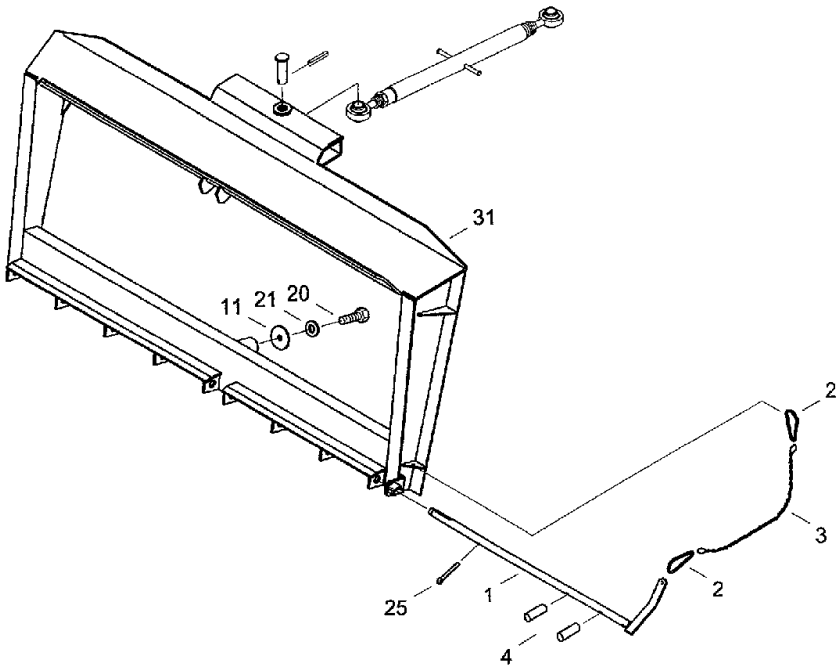

◀A010

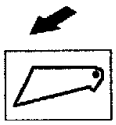

CF80 CASE IH CROSS FLOW COMBINE

A150 FEEDER- SUPPORTING FRAME [CF80Q]

Ref	Part Number	Qty	Description
1	31314096	1	STEM, Fuse item
2	06605652	2	SPLIT PIN/SAFETY PIN, Spring hook B60 DIN5299 ZN AUSWEICH03286
3	31344140	1	CHAIN (AGRICULTURE), Chain G5x21-4GLIEDER DIN5685
4	838-5640	2	PIN, M6 x 40, Slotted, M6 x 40, Slotted
11	31315273	1	WASHER, Washer
20	614-16030	1	SCREW, Hex, M16 x 30, 8.8, Full Thd, Hex, M16 x 30, 8.8, Full Thd, ISO4017
21	06577093	1	WASHER, LOCK, Locking washer M16
25	06402730	1	PIN, SPLIT (COTTER), Splint pin 5x32 DIN94 ST
31	31315796	1	FRAME, Frame

A160 (2) FEEDER- SLIP CLUTCH 600Nm+50Nm

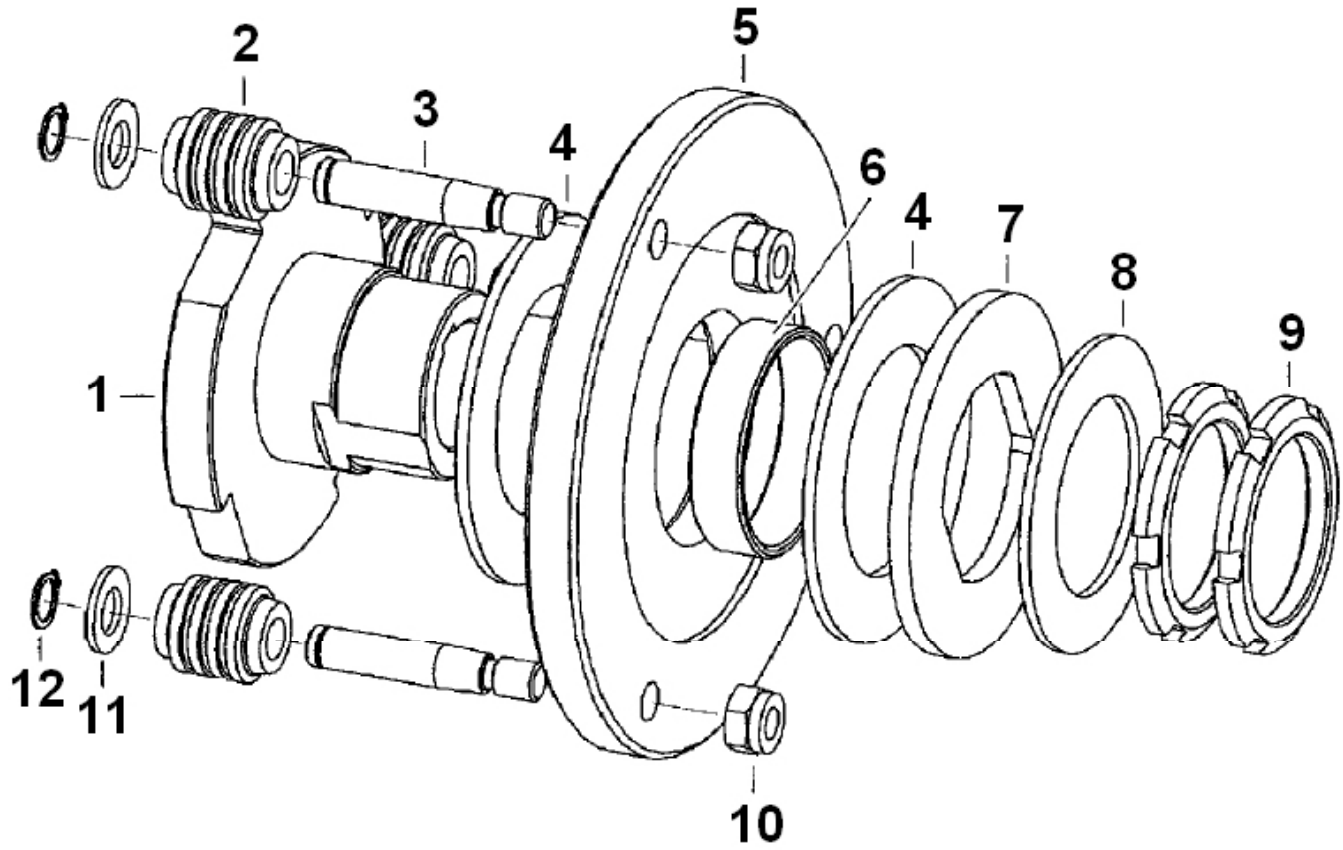

◄A010

A160 (2) FEEDER- SLIP CLUTCH **600Nm+50Nm** **(модернизированная)**

528-50330:000 МУФТА ФРИКЦИОННАЯ

Ref	Part Number	Qty	Description
	31271244N1	1	SLIP CLUTCH, Comp. **600Nm+50Nm**
1	31279805N1	1	BODY, Retaining sleeve 528-50330:001 СТУПИЦА
2	31349811N1	5	BUFFER, RUBBER, Buffer 528-50330:006 ВТУЛКА
3	31279862N1	5	PIN, LARGE, Bolt 528-50330:005 ПАЛЕЦ
4	31279846N1	2	FACING, Friction lining 528-50330:007 ФРИКЦИОН
5	31279813N1	1	PIN, LARGE, Plate 528-50330:002 ФЛАНЕЦ
6	31279838N1	1	BUSHING, Sleeve 528-50330:004 КОЛЬЦО
7	31279821N1	1	RING, PRESSURE, Thrust ring 528-50330:003 ШАЙБА
8	31279854N1	1	SPRING, BELLEVILLE, Belleville spring 528-50330:008 ПРУЖИНА
9	06230253	2	SLOTTED NUT, Grooved nut M70x2,0 DIN70852
10	06116050	5	NUT, Hex nut M12 DIN69258
11	895-11014	5	DISC, Washer B15/140HV-A3C DIN125
12	8001114	5	RING, SNAP, M14, Ext, Snap ring 14x1 DIN471 FST

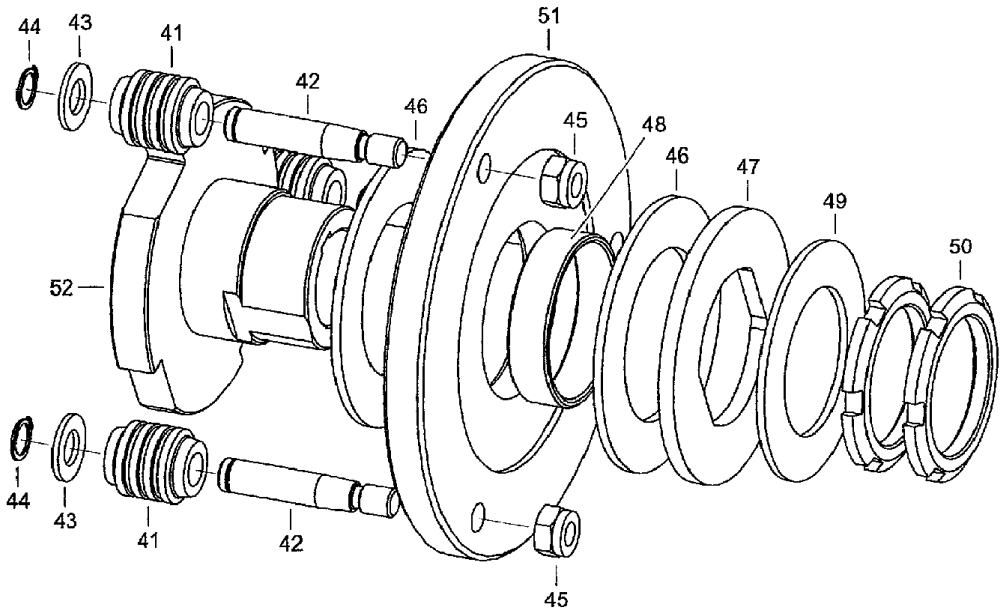

◄A010

CF80 CASE IH CROSS FLOW COMBINE

A160 FEEDER- SLIP CLUTCH

Ref	Part Number	Qty	Description
41	31349811N1	3	BUFFER, RUBBER, Buffer
42	31349828	3	PIN, LARGE, Bolt
43	31349836	3	DISC, Washer B15/140HV-A3CDIN125
44	800-1114	3	RING, SNAP, M14, Ext, Snap ring 14x1 DIN471 FST
45	06116050	3	NUT, Hex nut M12DIN69258
46	31349860N1	2	FACING, Friction lining
47	31349877	1	RING, PRESSURE, Thrust ring
48	31271340N1	1	BUSHING, Sleeve
49	31271357N1	1	SPRING, BELLEVILLE, Belleville spring
50	06230575	2	SLOTTED NUT, Grooved nut M60x1,5DIN70852 17H
51	31271324N1	1	PIN, LARGE, Plate
52	31271316N1	1	BODY, Retaining sleeve

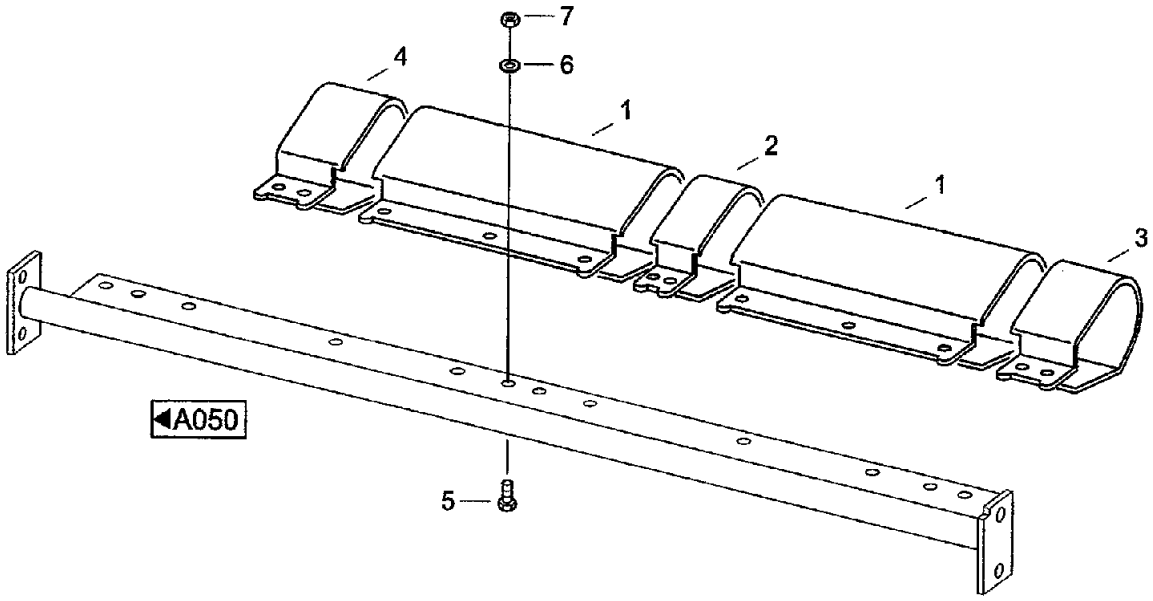
7
6
4
1
2
1
3
A050
5

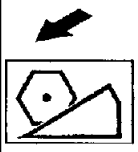

CF80 CASE IH CROSS FLOW COMBINE

A200 FEEDER- WRAP PREVENTION

Ref	Part Number	Qty	Description
1	31351277	2	PROTECTION PLATE, Trim
2	31351285	1	PROTECTION PLATE, Trim m
3	31351293	1	PROTECTION PLATE, Trim l
4	31351308	1	PROTECTION PLATE, Trim r
5	614-8020	20	BOLT, Hex, M8 x 20, 8.8, Hex bolt M8x20ISO40178.8
6	06577044	20	WASHER, SPECIAL, Locking washer B8
7	832-46408	10	NUT, LOCK, M8 x 1.25, Cl 8,

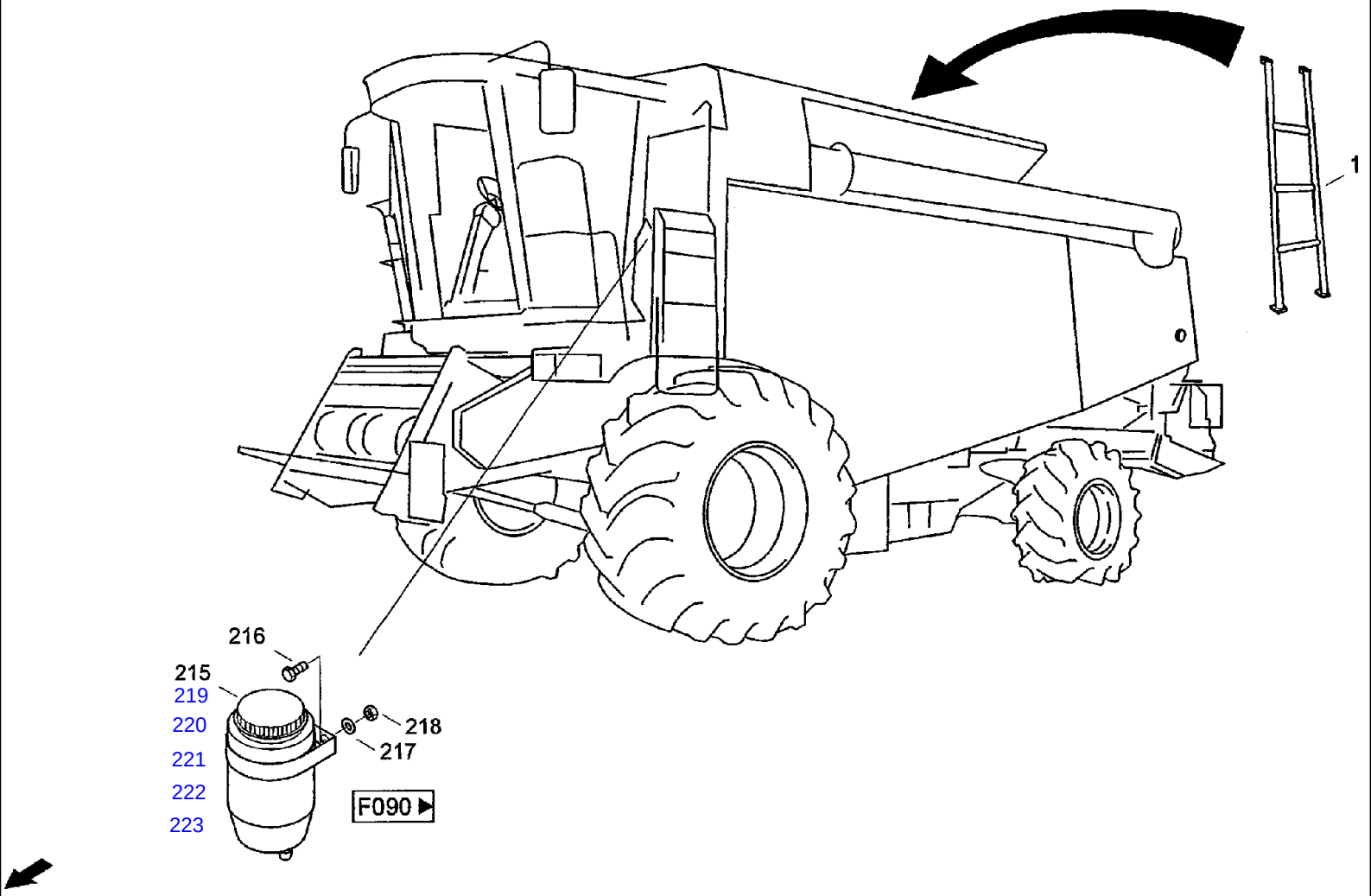
1
216
215
219
220
221
222
223
218
217
F090

CF80 CASE IH CROSS FLOW COMBINE

A250 COMBINE

Ref	Part Number	Qty	Description
1	31289815	1	LADDER, Grain tank entry
215	02818081	1	RESERVOIR, Compensator vessel 54-00104 КОРПУС БАЧКА
216	614-6010	2	BOLT, Hex, M6 x 10, 8.8, Full Thd, Hex bolt
217	06501397	2	WASHER, SPRING, Wave washer spring B6 DIN137 FST
218	825-1406	2	NUT, M6, Cl 8,
219		2	54-00135 КРЫШКА БАЧКА
220		2	403-3505119 ОТРАЖАТЕЛЬ КРЫШКИ
221		2	T100-00.00.002 ГАЙКА M20*1.5
222		2	T100-00.00.003 СОЕДИНЕНИЕ
223		2	024-028-25-2-2 КОЛЬЦО

B010 THRESHING MECHANISM- THRESHING DRUM, VARIOUS COMPONENTS

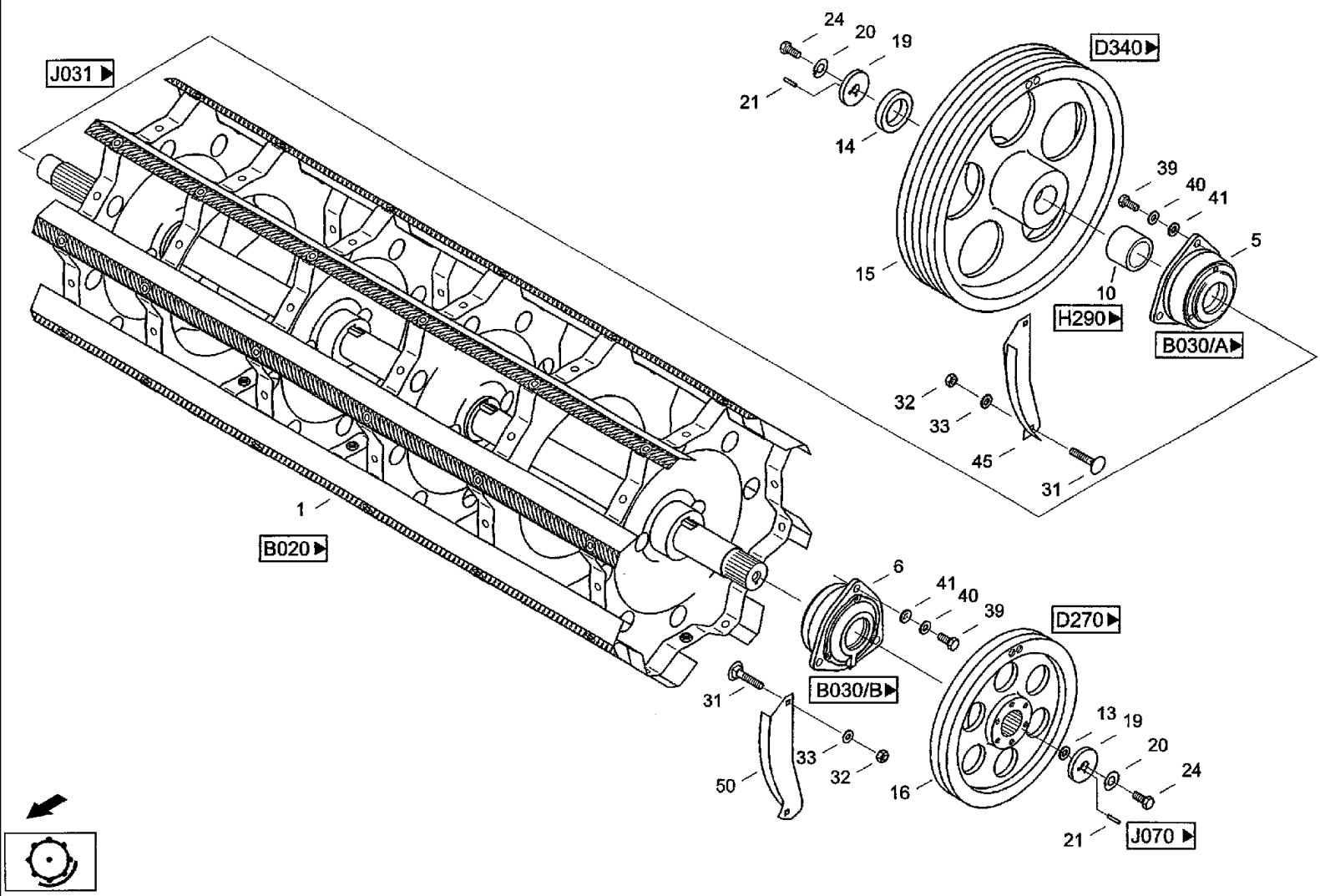

CF80 CASE IH CROSS FLOW COMBINE

B010 THRESHING MECHANISM- THRESHING DRUM, VARIOUS COMPONENTS

Ref	Part Number	Qty	Description
1	31301813	1	BEATER, Trashing drum B002-00.00.000 МОЛОТИЛЬНЫЙ БАРАБАН
5	31291801	1	BEARING, Bearing r
6	061001573	1	BEARING, Bearing l
10	31291930	1	BUSHING, Sleeve B001-00.00.003 ВТУЛКА
13	31287001	2	DISC, Washer
14	31301838	1	BUSHING, Backup ring B001-00.00.004 ВТУЛКА
15	31292160	1	PULLEY, V-belt pulley B001-00.00.001 ШКИВ
16	061079858	1	GROOVED PULLEY, V-belt pulley GGG40 B001-00.00.002 ШКИВ
19	31332555	2	END, End washer l B001-00.00.005 ШАЙБА
20	06461468	2	WASHER, Washer 17 DIN432 ST
21	06142093	2	PIN, Notched dowel 4x30 DIN1473 ST
24	614-16050	2	BOLT, Hex, M16 x 50, 8.8,
31	07753092	4	SCREW, Flat-round-head screw M8x20 DIN603 8.8
32	825-1408	4	NUT, M8, Cl 8,
33	06577044	4	WASHER, SPECIAL, Locking washer B8
39	614-12035	6	BOLT, Hex, M12 x 35, 8.8, Full Thd, Hex bolt M12x35ISO40178.8
40	97022151	6	WASHER, SPRING, Wave washer spring B12DIN137FST
41	020947713	6	WASHER, Washer
45	31295887	1	SLAT, Filler bar B001-10.00.000 Накладка ПР.
50	31315626	1	ANGLE BAR, Filler bar B001-10.00.000-01 Накладка ЛЕВ.

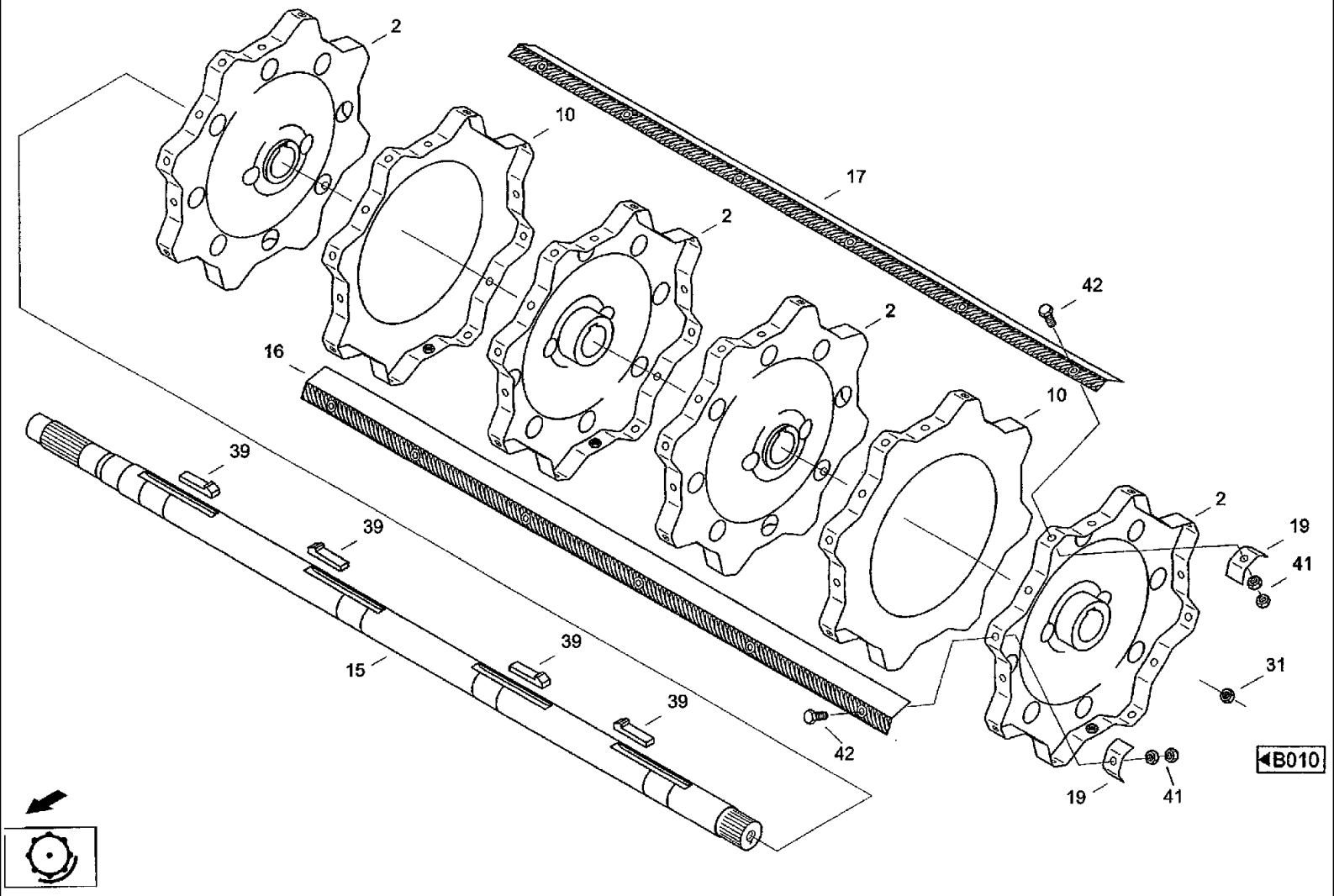
2
10
17
2
42
2
16
10
39
2
19
39
41
39
31
15
39
42
B010
19
41

CF80 CASE IH CROSS FLOW COMBINE

B020 THRESHING MECHANISM- THRESHING DRUM

Ref	Part Number	Qty	Description
2	060100616	4	HUB, Drum star B002-10.00.000 ЗВЕЗДОЧКА
10	020217748	2	FLANGE, Drum star 5550-5301:026/03 ЗВЕЗДОЧКА
15	31291746	1	SHAFT, Shaft B002-00.00.001 ВАЛ
16	060100632	4	RASP BAR, Baffle plate B002-00.00.002 БИЛО
17	060100640	4	RASP BAR, Baffle plate B002-00.00.002-01 БИЛО
19	020273345	16	BLOCK, Shim 5550-5301:034/04 прокладка
31	829-1412	5	NUT, M12, Cl 10, Hex nut M12 ISO4032 10
39	003507307	4	KEY, Gib-head key 20x12x70 DIN6887 ШПОНКА
41	829-1412	96	NUT, M12, Cl 10, Hex nut M12 ISO4032 10
42	006347281	48	SCREW, Hex bolt M12x50 ISO4017 10.9
43		1	5550-5301:034/04 противовес
44		1	5550-5301:037/04 противовес
45		1	5550-5301:038/04 противовес
46		1	5550-5301:039/04 противовес

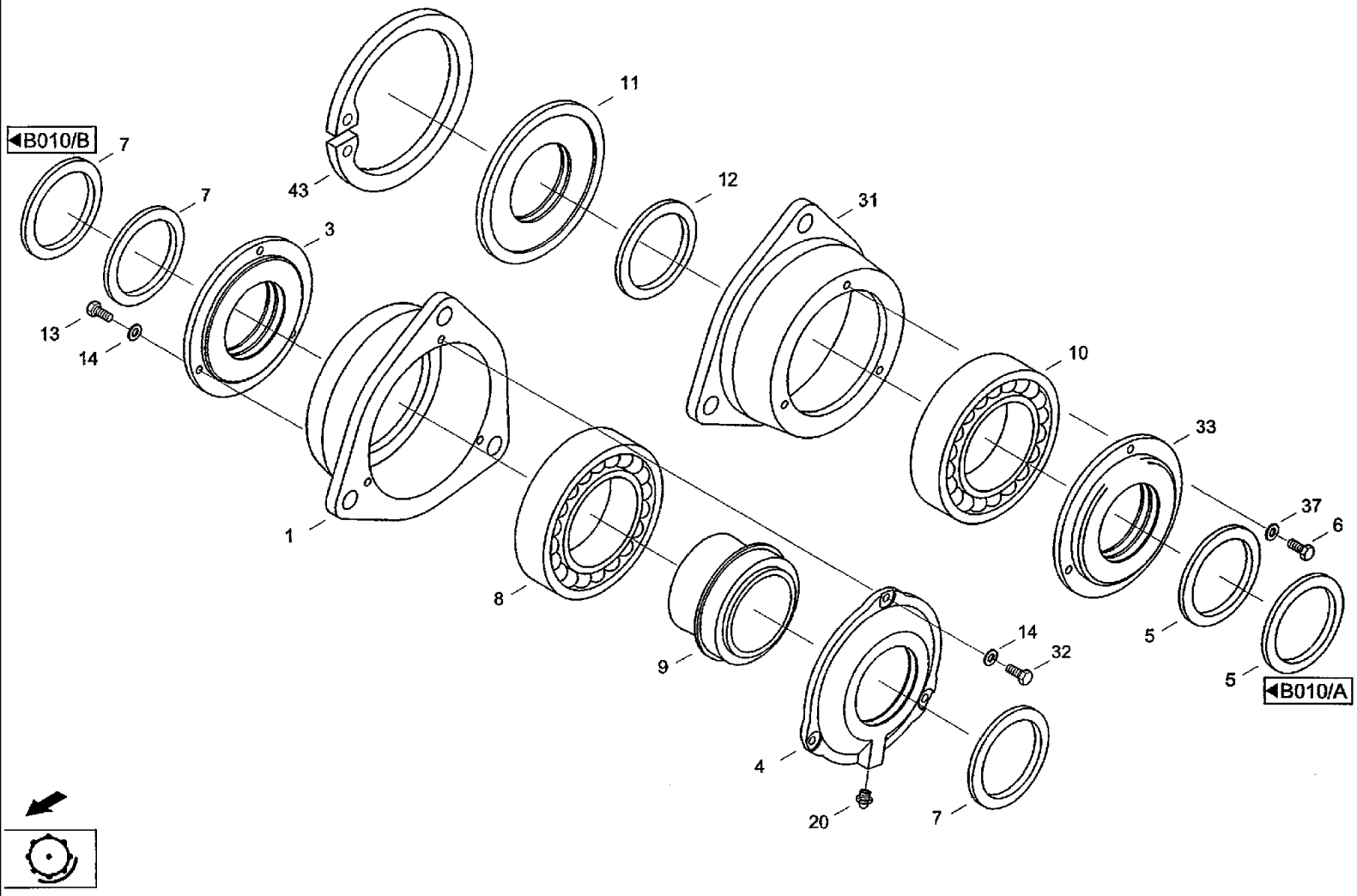
B010/B
7
7
43
11
12
31
3
13
14
10
33
37
6
1
8
9
14
32
5
5
B010/A
4
20
7

CF80 CASE IH CROSS FLOW COMBINE

B030 THRESHING MECHANISM- BEARING

Ref	Part Number	Qty	Description
1	060100665	1	HOUSING, BEARING, Bearing housing B004-00.00.001 КОРПУС ПОДШИПНИКА
3	061001557	1	COVER, Cap B004-00.00.002 КРЫШКА
4	061001565	1	COVER, Cap B004-00.00.004 КРРЫШКА
5	009160951	2	RING, Felt ring 65-F2DIN5419
6	614-6014	3	BOLT, Hex, M6 x 14, 8.8, Full Thd, Hex bolt M6x14 ISO4017 8.8 в003-00.00.004 войлочное кольцо
7	009160951	3	RING, Felt ring 65-F2 DIN5419 B003-00.00.004 ВОЙЛОЧНОЕ КОЛЬЦО
8	003665594	1	BEARING, Self-alinging ball bearing 2215K-C3
9	003674136	1	PIN, ROLL, Tension sleeve H315
10	003660243	1	BEARING, Self-alinging ball bearing 1312DIN630
11	31291826	1	ANCHOR, Seal, retainer B003-00.00.003 КРЫШКА
12	060530074	1	RING, Felt ring 75-F2 DIN5419 B003-00.00.005 ВОЙЛОЧНОЕ КОЛЬЦО
13	614-6016	3	BOLT, Hex, M6 x 16, 8.8,
14	06501397	6	WASHER, SPRING, Wave washer spring B6DIN137FST
20	03617097	1	NIPPLE, LUBE, Grease nippel BM10x1 DIN71412
31	31291818	1	HOUSING, BEARING, Bearing housing B003-00.00.001 КОРПУС ПОДШИПНИКА
32	614-6014	3	BOLT, Hex, M6 x 14, 8.8, Full Thd, Hex bolt M6X14ISO40178.8
33	31291842	1	SHROUD, Cap B003-00.00.002 КРЫШКА
37	06501397	3	WASHER, SPRING, Wave washer spring B6DIN137FST
43	800-21130	1	RING, SNAP, M130, Int, Snap ring 130x4DIN472FST

B050(01) THRESHING MECHANISM- GUIDE DRUM

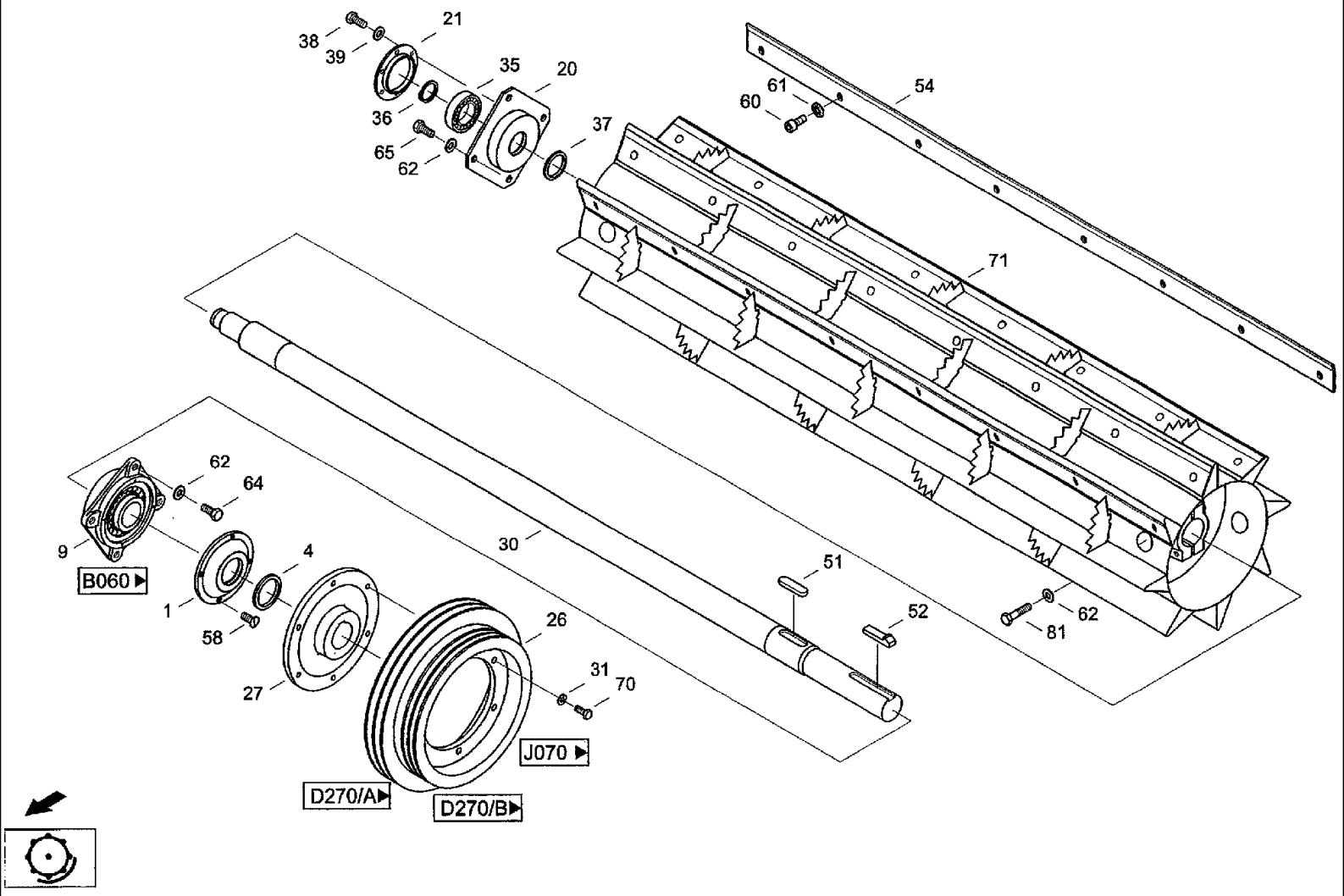

CF80 CASE IH CROSS FLOW COMBINE

B050(01) THRESHING MECHANISM- GUIDE DRUM

Ref	Part Number	Qty	Description
1	060003648	1	COVER, Cap B006-00.00.002 КРЫШКА
4	060164977	1	BUSHING, LARGE, Felt ring 55-F2 DIN5419
9	060003406	1	BEARING, Bearing
20	31333291	1	HOUSING, BEARING, Housing B005-00.00.002 КОРПУС
21	31340651	1	COVER, Cap B005-00.00.003 КРЫШКА
26	31343494	1	GROOVED PULLEY, V-belt pulley B008-00.00.001 ШКИВ
27	31343500	1	HUB, Hub B008-00.00.002 СТУПИЦА
30	061077366	1	SHAFT, Shaft B005-00.00.001 ВАЛ
31	06577003	6	WASHER, SPECIAL, Locking washer M10
35	97062008	1	BEARING, Self-alinging ball bearing 1208 DIN630
36	800-1140	1	RING, SNAP, M40, Ext, Snap ring 40x1,75DIN471 FST
37	009107955	1	BUSHING, LARGE, Felt ring 45-F2 DIN5419 722510-04 ВОЙЛОЧНОЕ КОЛЬЦО
38	614-8020	6	BOLT, Hex, M8 x 20, 8.8, Hex bolt M8X20ISO40178.8
39	06577028	6	WASHER, SPECIAL, Locking washer M8
51	003506861	1	KEY, BUCKET TOOTHRT, Flat key A18x11x70DIN6885 ШПОНКА
52	03502665	1	KEY, Gib-head key 16x1 0x70 DIN6887 ШПОНКА
54	31344903	8	SLAT, Slat B005-00.00.005 ПЛАНКА
58	006071592	4	SCREW, Countersunk screw M5X10-4.8-A3C DIN963
60	97007364	56	SCREW, Cheese-head screw M10x25DIN69128.8
61	06577052	56	WASHER, SPECIAL, Locking washer B10
62	06577011	12	PLATE, LOCKING, Locking washer M12
64	614-12030	4	BOLT, Hex, M12 x 30, 8.8, Hex bolt M12x30ISO40178.8 M12x35IS040178.8
65	614-12035	4	BOLT, Hex, M12 x 35, 8.8, Full Thd, Hex bolt
70	614-10025	6	BOLT, Hex, M10 x 25, 8.8, Full Thd, Hex bolt M10x25ISO40178.8
71	31303487	1	DRUM, Drum B005-10.00.000 БАРАБАН
82		1	КОЛЬЦО B005-00.00.004

B050(02) THRESHING MECHANISM- GUIDE DRUM

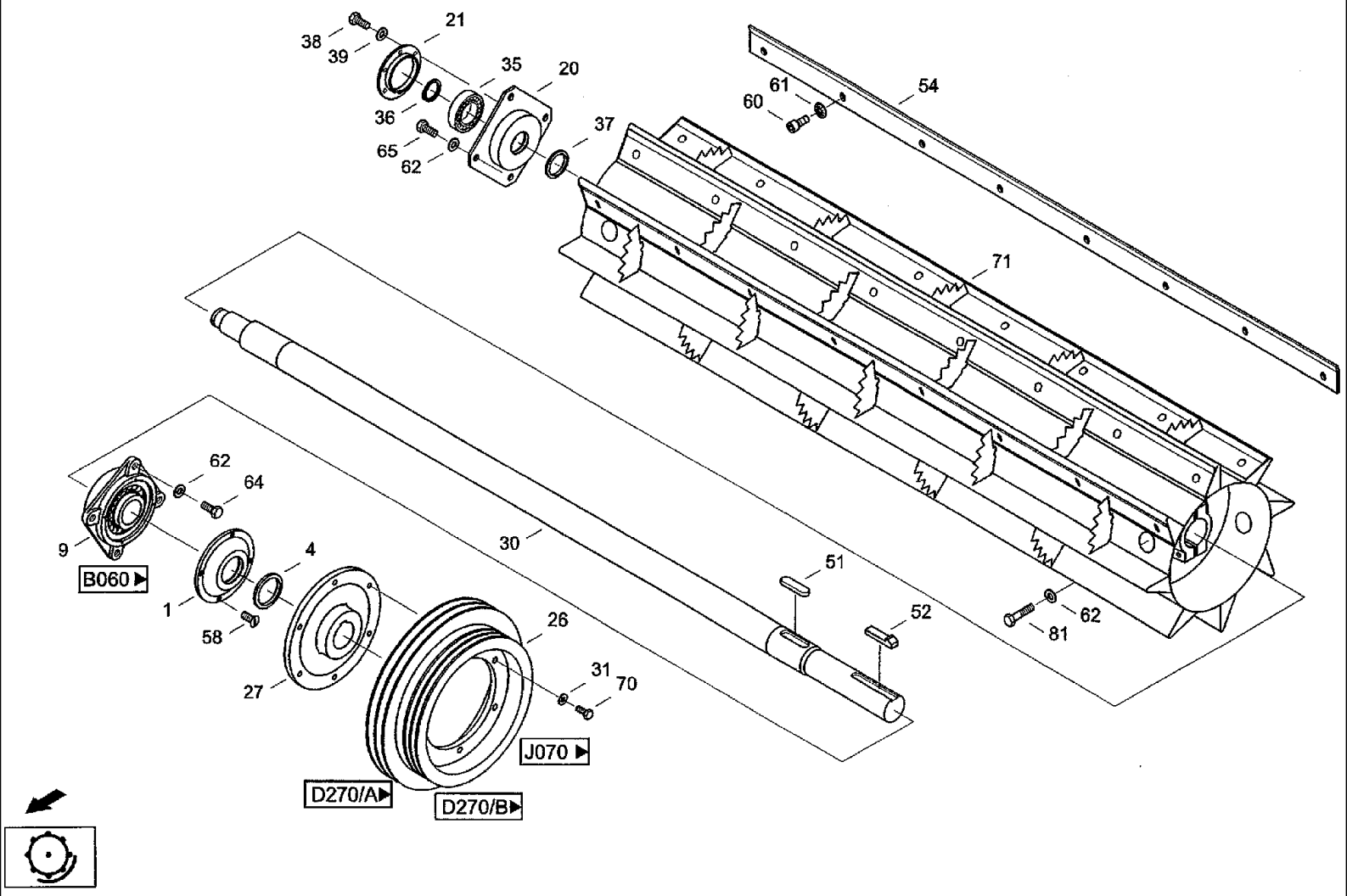

CF80 CASE IH CROSS FLOW COMBINE

B050(02) THRESHING MECHANISM- GUIDE DRUM

Ref	Part Number	Qty	Description
81	827-12055	4	BOLT, Hex, M12 x 55, 10.9, Hex bolt M12x55ISO401410.9
82		1	в005-00.00.004 кольцо

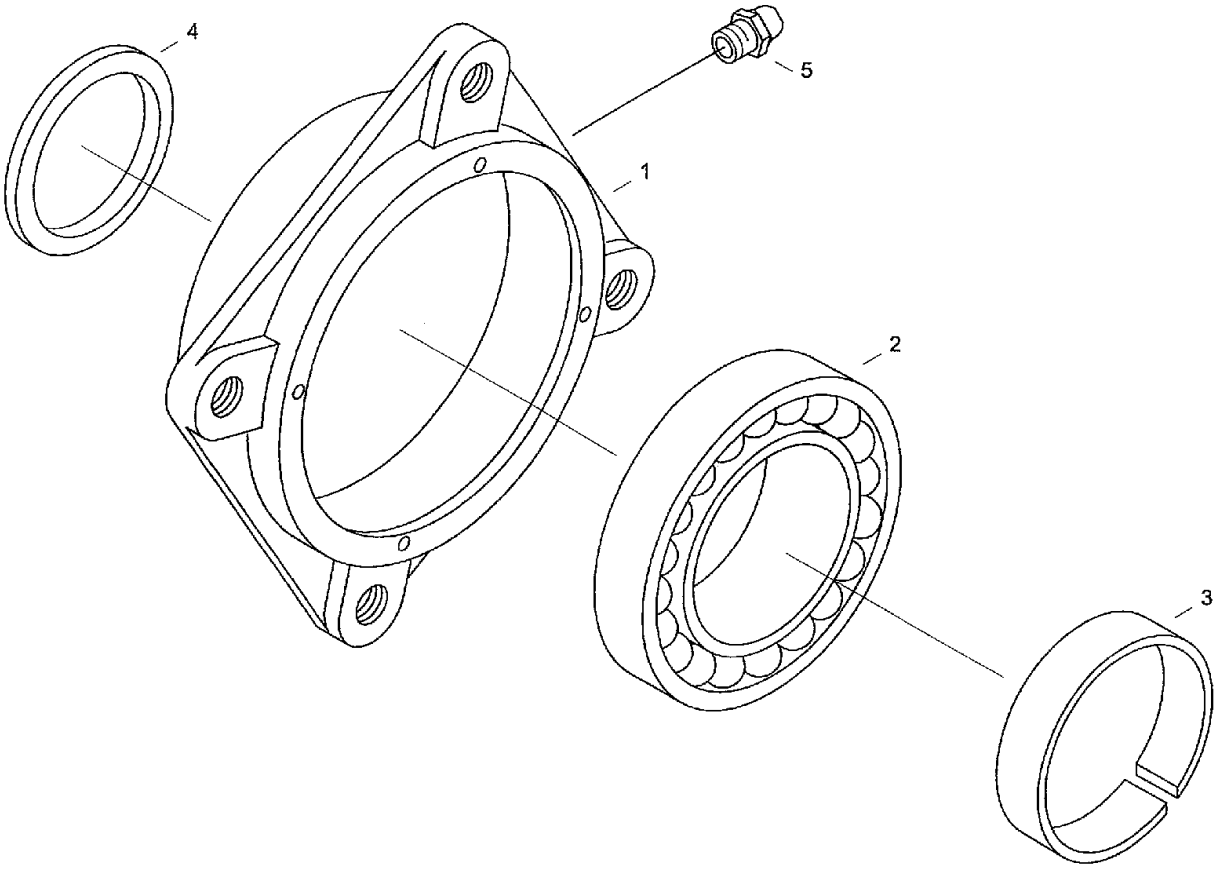

◀B050

CF80 CASE IH CROSS FLOW COMBINE

B060 THRESHING MECHANISM- BEARING

Ref	Part Number	Qty	Description
1	060003414	1	HOUSING, BEARING, Bearing housing B006-00.00.001 КОРПУС
2	003660485	1	BEARING, Self-alinging ball bearing 1312KDIN630
3	003674587	1	PIN, ROLL, Tension sleeve
4	060164977	1	BUSHING, LARGE, Felt ring 55-F2 DIN5419 524-33309:002 ВОЙЛОЧНОЕ КОЛЬЦО
5	03617056	1	NIPPLE, LUBE, Grease nippel AM8x1 DIN71412

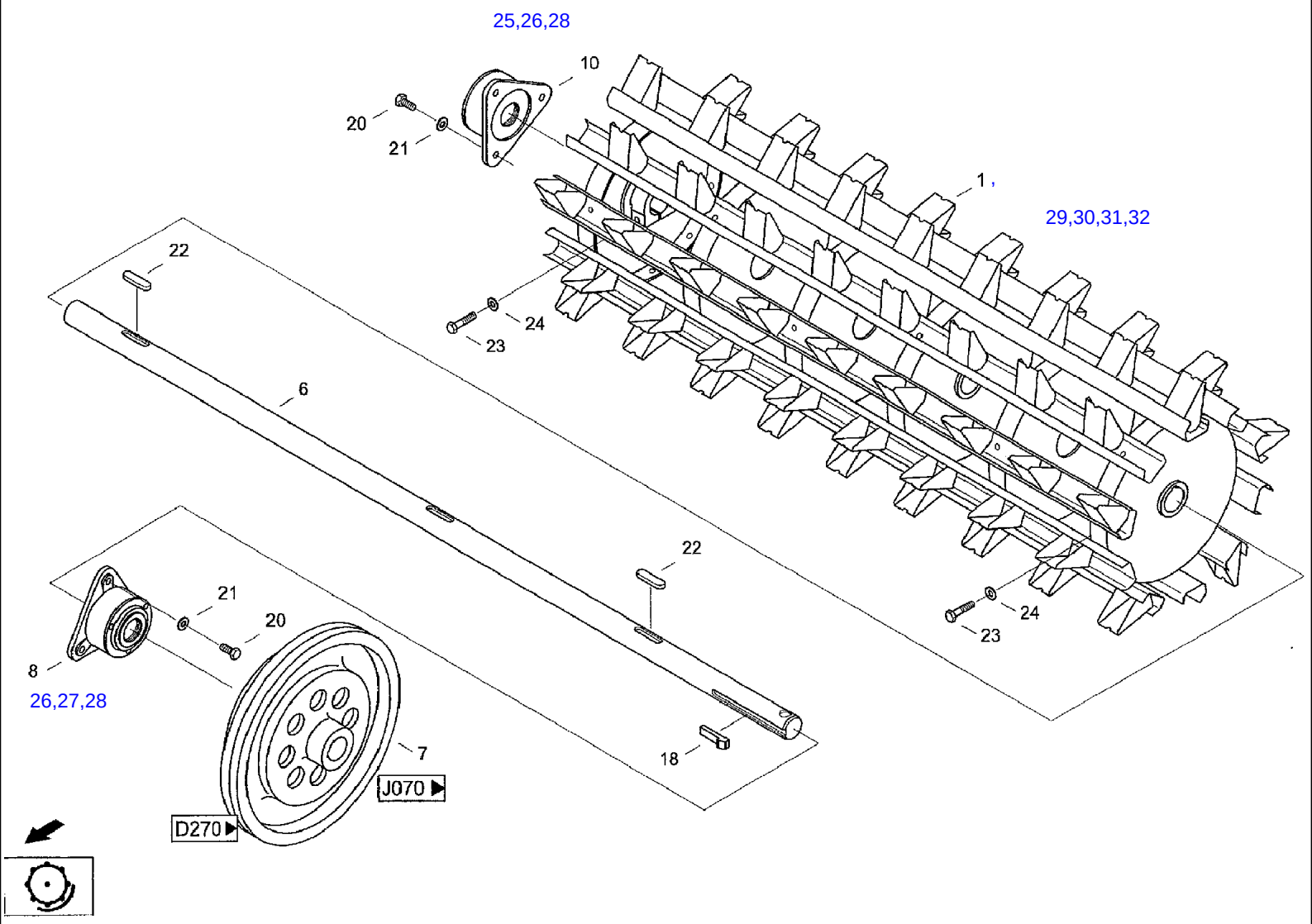
25,26,28
10
20
21
1
29,30,31,32
22
24
23
6
22
21
20
8
26,27,28
7
18
J070
D270

CF80 CASE IH CROSS FLOW COMBINE

B090 THRESHING MECHANISM- SEPARATING DRUM

Ref	Part Number	Qty	Description
1	31352977N1	1	DRUM, Separating drum B009-10.00.000БАРАБАН СЕПАРИРУЮЩИЙ
6	061077341	1	SHAFT, Shaft B009-00.00.001 ВАЛ
7	31301163	1	SHEAVE, V-belt pulley GG-20 DIN1691 B009-00.00.002 ШКИВ
8	060501623	1	CARRIER, BEARING, Flange bearing housing 72251 1B-1211K+H21 1-1XZW85X1
10	02852926	1	CARRIER, BEARING, Flange bearing housing 72251 1A-1211K+H211
18	03502497	1	KEY, Gib-head key 14x9x125 DIN6887 ШПОНКА
20	614-12035	6	BOLT, Hex, M12 x 35, 8.8, Full Thd, Hex bolt M12x35ISO40178.8
21	06577011	6	PLATE, LOCKING, Locking washer M12
22	97031126	2	KEY, BUCKET TOOTHRT, Flat key 970311269 ШПОНКА
23	814-12070	2	BOLT, Hex, M12 x 70, 8.8,
24	06577011	2	PLATE, LOCKING, Locking washer M12
25		1	КРЫШКА(С ОТВ.) B009-30.00.002
26		2	КОРПУС B009-20.00.001
27		1	КРЫШКА (БЕЗ ОТВ.) B009-20.00.002
28		3	КОЛЬЦО ВОЙЛОЧНОЕ B009-20.00.003
29		5	ПЛАНКА УДАРНАЯ B009-10.01.000
30		5	ПЛАНКА УДАРНАЯ B009-10.02.000
31		3	СТЕНКА B009-10.03.000
32		3	СТЕНКА 527-33412:000/03

B110 THRESHING MECHANISM- STRAW STRIPPER DRUM

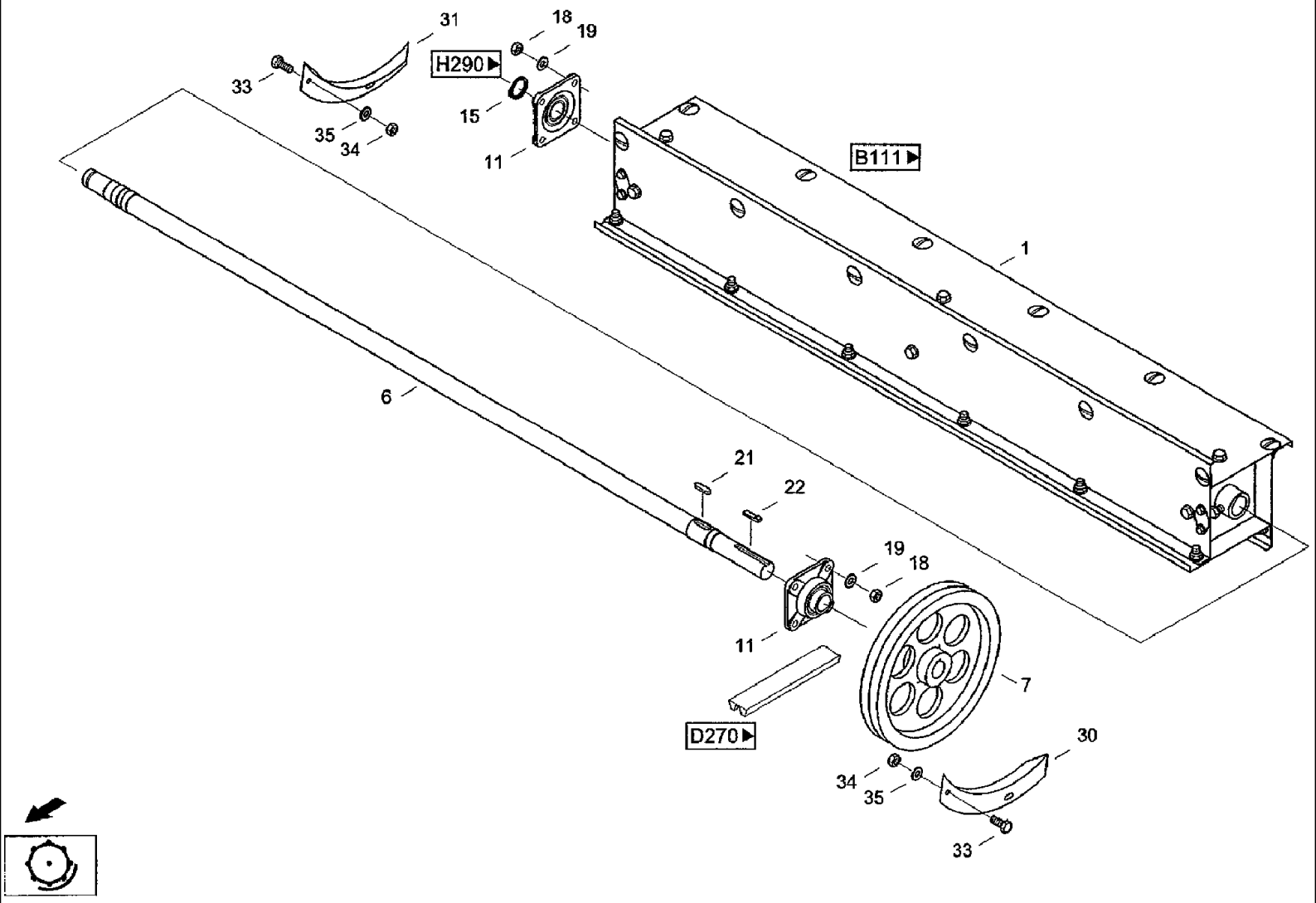

CF80 CASE IH CROSS FLOW COMBINE

B110 THRESHING MECHANISM- STRAW STRIPPER DRUM

Ref	Part Number	Qty	Description
1	061076316	1	STRAW BEATER, Drum body B029-00.00.000 БАРАБАН
6	061072642	1	SHAFT, Shaft B011-00.00.001 ВАЛ
7	061072650	1	GROOVED PULLEY, V-belt pulley B011-00.00.002 ШКИВ
11	03671937	2	CARRIER, BEARING, Flanged bearing TGL20906-FGE207
15	800-1135	1	RING, SNAP, M35, Ext, Snap ring 35x1,5DIN471 FST
18	825-1412	8	NUT, M12, Cl 8, Hex nut M12 ISO4032 8
19	06577011	8	PLATE, LOCKING, Locking washer M12
21	03501551	1	KEY, BUCKET TOOTHRT, Flat key A1 2x8x45 DIN6885 ШПОНКА
22	03781075	1	KEY, Gib-head key 10x8x70 DIN6887 NASENKEIL 003781075 ШПОНКА
30	020802177	1	RAIL, Rail LINKS B 011-10.00.000-01 ПЛАНКА
31	020802160	1	RAIL, Rail r B011-10.00.000 ПЛАНКА
33	614-8016	4	BOLT, Hex, M8 x 16, 8.8,
34	825-1408	4	NUT, M8, Cl 8,
35	06577028	4	WASHER, SPECIAL, Locking washer M8

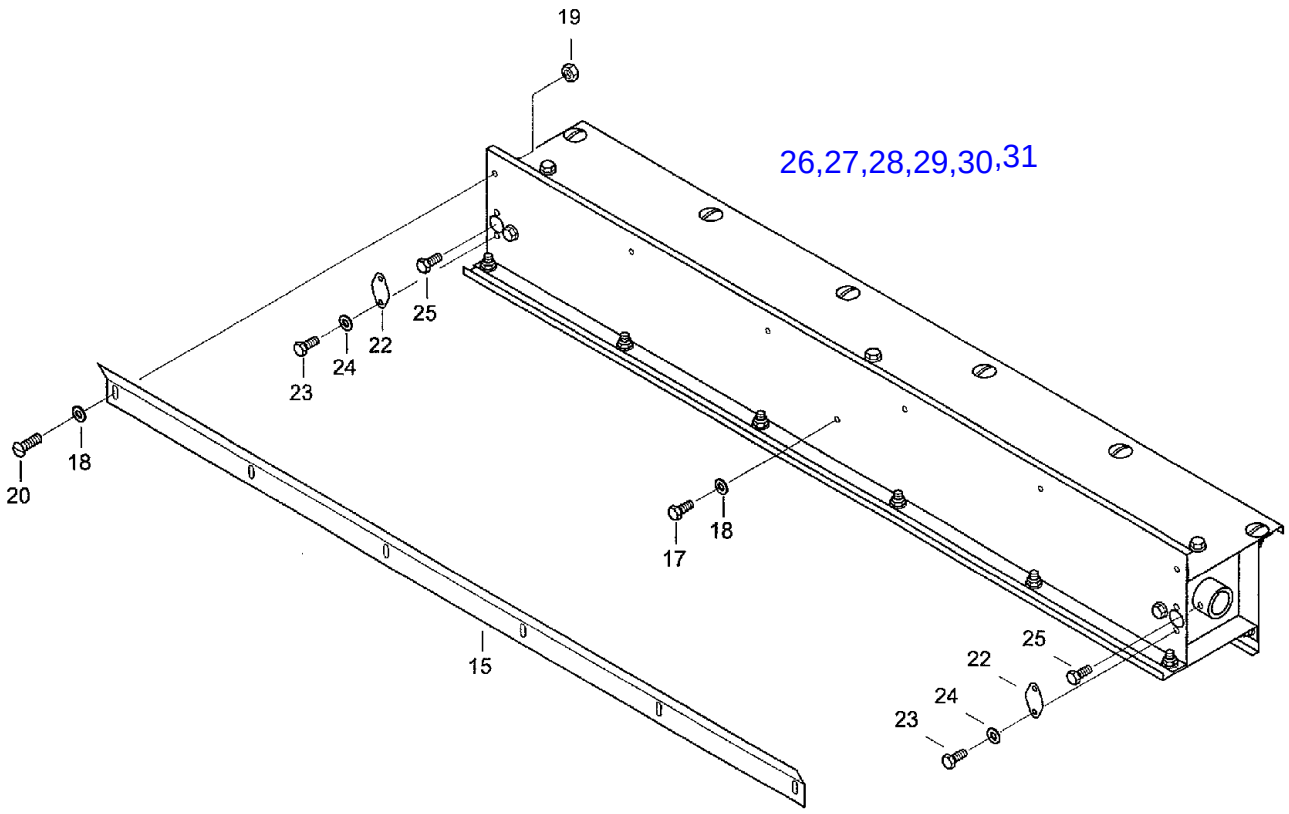

◀B110

CF80 CASE IH CROSS FLOW COMBINE

B111 THRESHING MECHANISM- DRUM BODY, SLAT

Ref	Part Number	Qty	Description
15	31301372	4	BAT, Slat в029-00.00.002 планка
17	614-10020	12	BOLT, Hex, M10 x 20, 8.8, Full Thd,
18	06577003	36	WASHER, SPECIAL, Locking washer M10
19	832-46410	24	NUT, LOCK, M10 x 1.5, Cl 8, Hex nut VM10DIN9808
20	07755576	24	SCREW, Flat-round-head screw M10X25 DIN603 8.8
22	061076412	2	PLATE, Cover panel в011-00.00.003 защитный щиток
23	614-8016	4	BOLT, Hex, M8 x 16, 8.8,
24	06577028	4	WASHER, SPECIAL, Locking washer M8
25	06373933	2	SCREW, Hex bolt M10x1x30 ISO8676 10.9
26		3	стенкав в029-10.00.001
27		1	стенка барабана в029-10.00.000
28		1	стенка(со ступицей в029-20.00.000
29		1	стенка (со ступицей) в029-30.00.000
30		1	стенка (без ступицы) в029-40.00.000
31		3	стенка в029-00.00.001

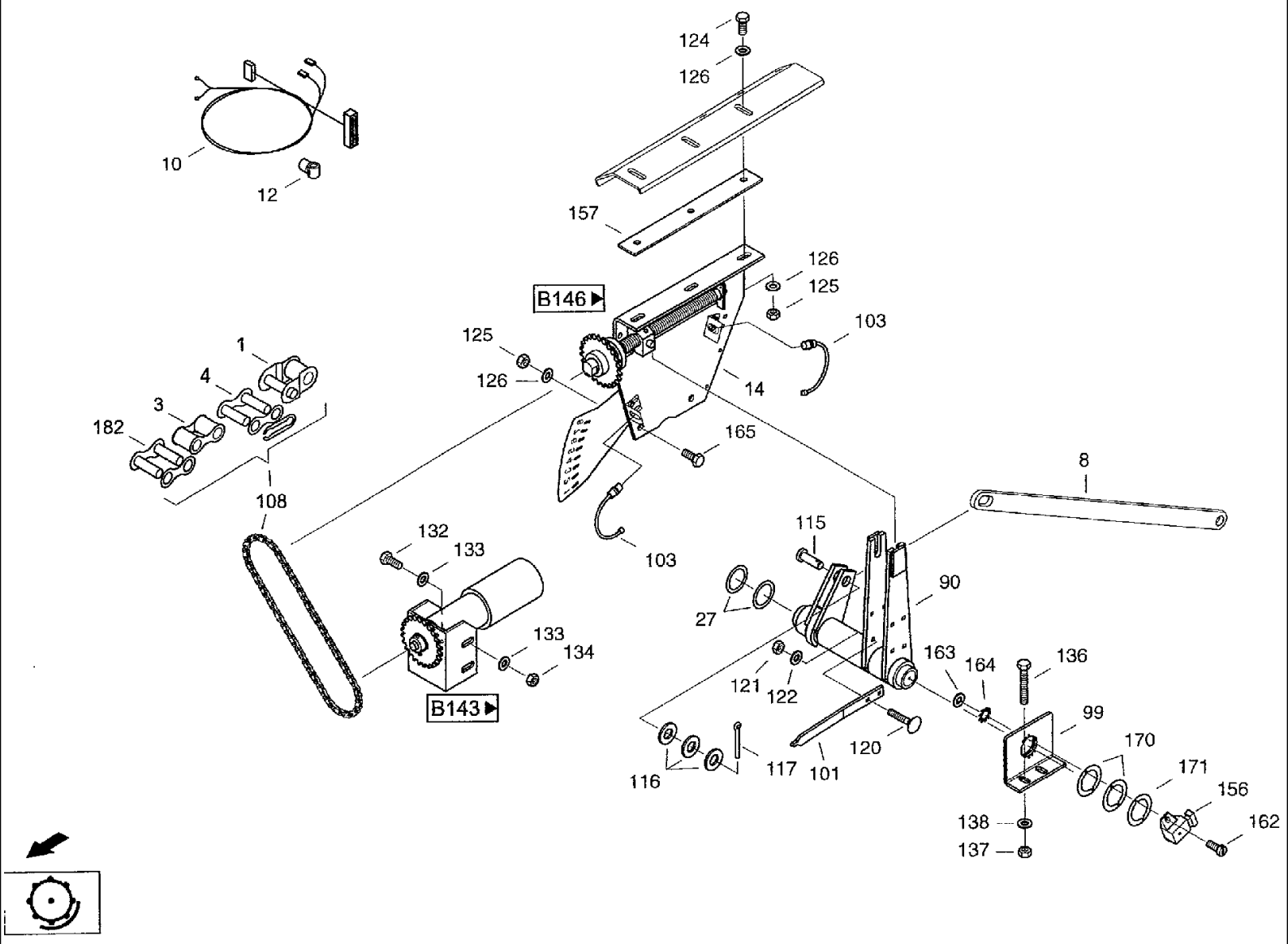
124
126
10
12
157
126
125
B146
103
125
126
14
1
4
3
182
165
8
108
132
133
115
103
27
90
133
134
121
122
163
164
136
B143
99
170
171
156
116
117
101
120
138
137
162

CF80 CASE IH CROSS FLOW COMBINE

B120(01) THRESHING MECHANISM- CONCAVE, ADJUSTMENT

Ref	Part Number	Qty	Description
1	98007451	1	LINK, OFFSET, Link L-08 B-1 DIN8187
2	061067075	1	LEVER, Lever r B012-20.01.000 РЫЧАГ
3	31328880	1	LINK, Link B-08B-1 DIN8187
4	06838112	1	LINK, Link E-08B-1 DIN8187
5	061079720	1	ROD, Drawbar B012-40.00.000 ТЯГА
8	061067114	1	BAR, Conrod B012-00.00.002 СВЯЗЬ
10	061071184	1	HARNESS, Cable KORBVERSTELLUNG
12	060509325	6	CLIP, Plastic clamp RAYMOND- PL-KK1 7095
14	31300724	1	ROD, ADJUSTMENT, Adjustment
18	061068420	2	BUSHING, Sleeve B012-00.00.005 ВТУЛКА
19	060010382	2	MOUNTING CLIP, Tension piece B012-20.02.000-01 ДВОЙНОЙ ШТЕПСЕЛЬ
23	061079632	1	FIXING BRACKET, Double pin plate
27	31300660	2	WASHER, Washer
30	31295678	1	ROD, Drawbar h B012-30.00.000 ТЯГА
31	061068494	2	DISC, Washer
32	061068412	2	SPACER, Spacer sleeve
35	061067147	2	PIN, LARGE, Bolt B015-00.00.000 ПАЛЕЦ
38	060010526	1	SHAFT, CROSS, Pin B012-60.00.001-01 ЦАПФА
39	31343277	1	SHAFT, CROSS, Adjusting shaft r B012-60.00.000 РЕГУЛИРОВОЧНЫЙ ВАЛ
41	061068404	2	COVER, PROTECTIVE, Cover
42	31315521	2	SHEET, Cover B012-00.00.004 КОЖУХ
43	31343373	1	ADJUSTER, Positioner
48	006332195	1	SCREW, Hex bolt
49	825-1410	1	NUT, M10, Cl 8,
50	06577003	1	WASHER, SPECIAL, Locking washer

B120(02) THRESHING MECHANISM- CONCAVE, ADJUSTMENT

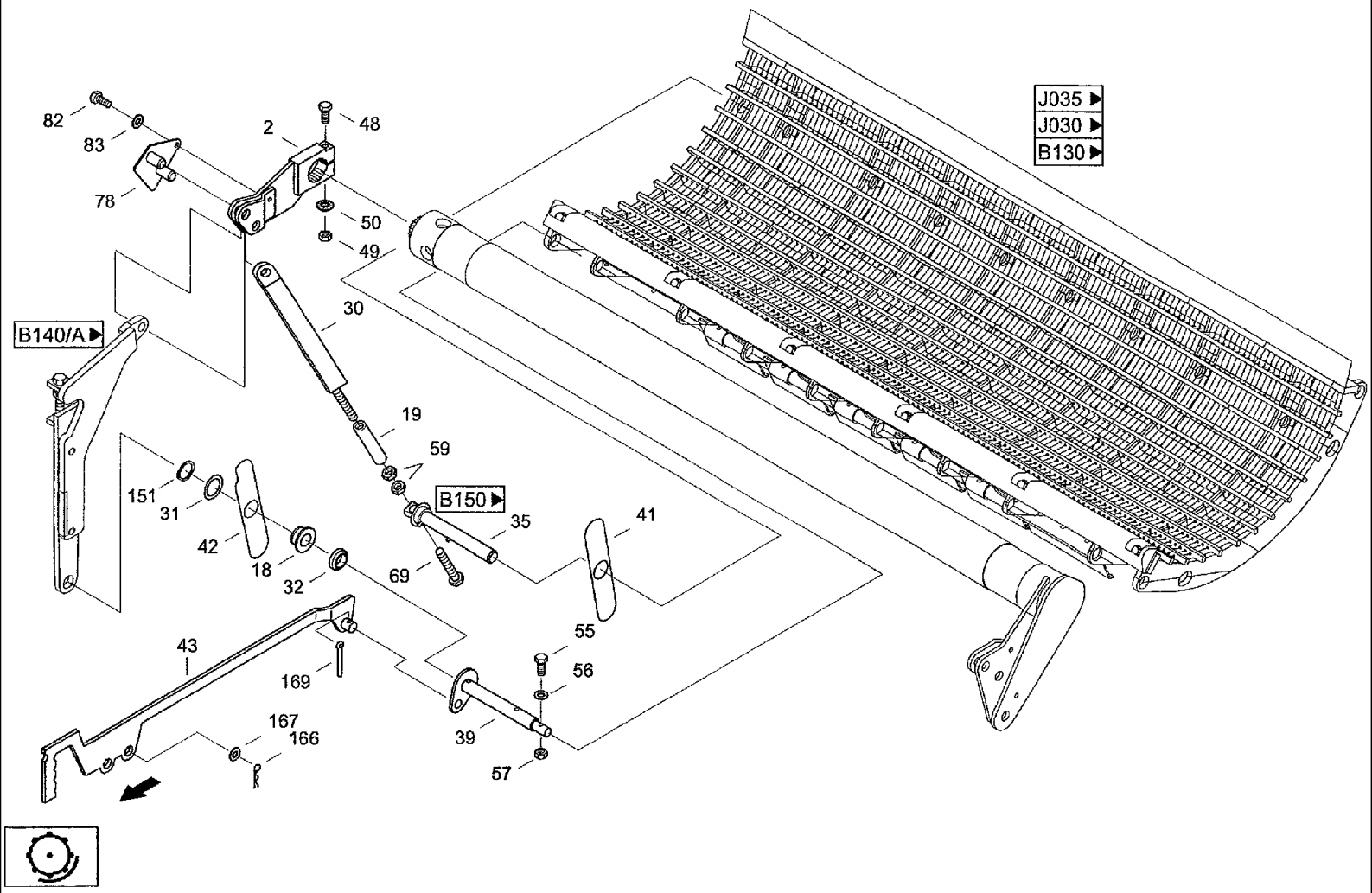

CF80 CASE IH CROSS FLOW COMBINE

B120(02) THRESHING MECHANISM- CONCAVE, ADJUSTMENT

Ref	Part Number	Qty	Description
54	733-6340	1	PIN, SPLIT (COTTER), M6.3 x 40, Splint pin 6,3x40 DIN94 ST
55	614-8040	2	BOLT, Hex, M8 x 40, 8.8, Full Thd, Hex, M8 x 40, 8.8, Full Thd
56	06577028	2	WASHER, SPECIAL, Locking washer M8
57	825-1408	2	NUT, M8, Cl 8,
59	825-1416	5	NUT, M16, Cl 8,
61	614-16120	1	BOLT, Hex, M16 x 120, 8.8, Full Thd, Hex bolt M16x120ISO40178.8
69	614-16090	1	BOLT, Hex, M16 x 90, 8.8, Full Thd, Hex bolt M16x90ISO40178.8
78	31287598	1	SUPPORT, Double pin plate B012-20.02.000 ДВОЙНОЙ ШТЕПСЕЛЬ
79	614-8050	1	BOLT, Hex, M8 x 50, 8.8, Full Thd, Hex bolt M8x50ISO40178.8
80	061079665	1	SHAFT, Adjusting shaft B012-50.01.000 РЕГУЛИРОВОЧНЫЙ ВАЛ
81	061079698	1	PIN, LARGE, Plug B012-50.03.000 ШТЕКЕР
82	614-8016	2	BOLT, Hex, M8 x 16, 8.8,
83	06577044	4	WASHER, SPECIAL, Locking washer B8
84	003799461	4	WASHER, Washer 26DIN126
85	825-1408	1	NUT, M8, Cl 8,
90	061067122	1	LEVERSHAFT, Lever shaft B012-10.01.000 ВАЛ РЫЧАГА
99	061068445	1	BRACKET, Support V B012-80.10.000 ДЕРЖАТЕЛЬ
101	061067163	1	BAR, Pointer B012-10.00.001 СТРЕЛКА
103	060533518	2	SENSOR, Sensor NI8U-EM12-AN4X-H1 141/S372
108	060526898	1	CHAIN (AGRICULTURE), Roller chains 08B-1x65LDIN8187
115	07640076	1	PIN, LARGE, Bolt B20H1 1x50x42 DIN1444 ST B012-00.00.003 ПАЛЕЦ
116	895-11020	3	WASHER, M20 x 37 x 3, Washer 21 DIN125ST
117	733-4040	1	PIN, SPLIT (COTTER), M4 x 40, Splint pin 4x40 DIN94 ST
120	007751234	2	SCREW, Flat-round-head screw M6x20 DIN603 8.8
121	832-10406	2	NUT, M6 x 1, Cl 8, Hex nut M6 DIN982 8

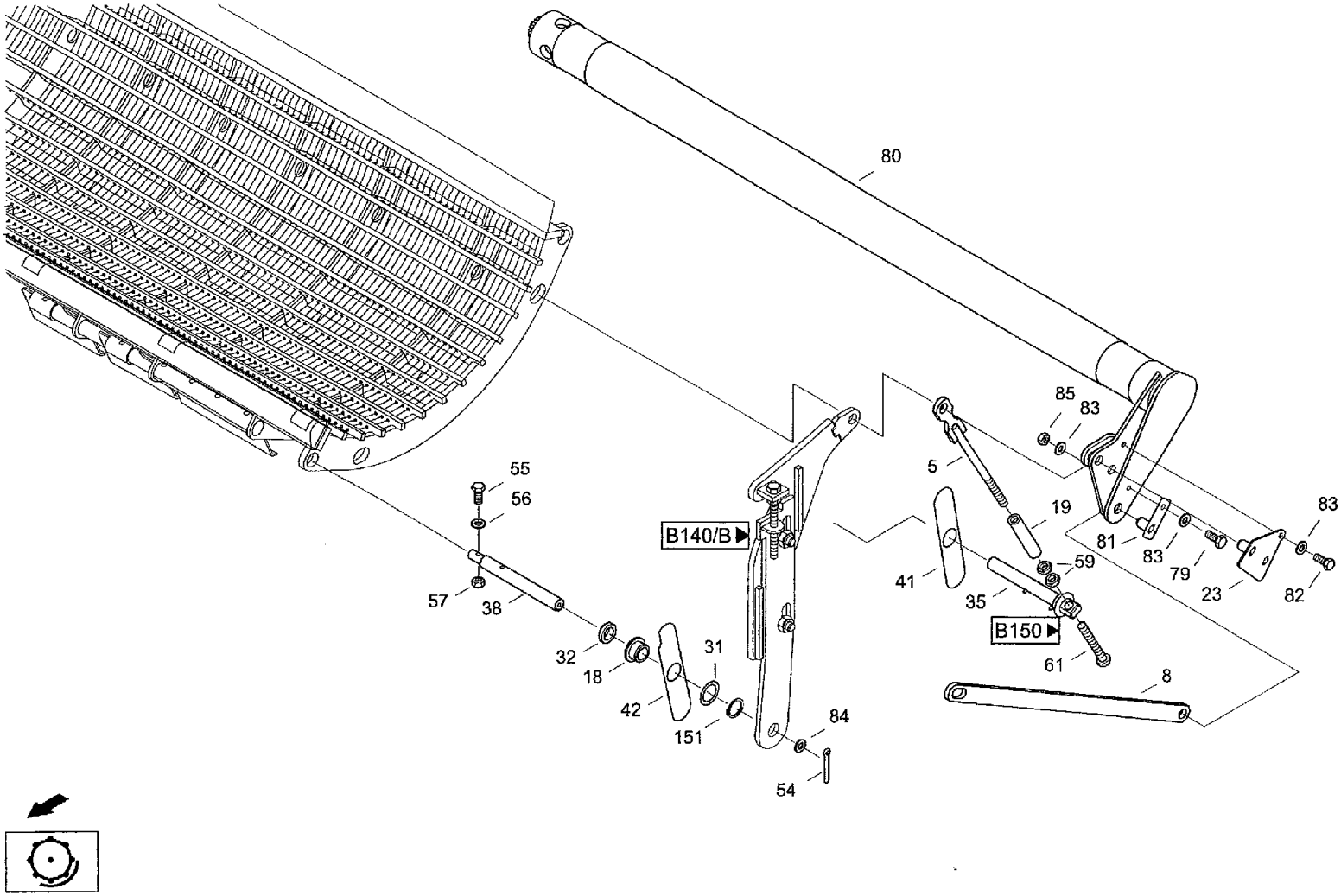
80
85
83
5
19
83
81
83
79
23
82
55
56
B140/B
59
41
35
B150
57
38
61
8
32
18
31
42
151
84
54

CF80 CASE IH CROSS FLOW COMBINE

B120(03) THRESHING MECHANISM- CONCAVE, ADJUSTMENT

Ref	Part Number	Qty	Description
122	06577036	2	WASHER, SPECIAL, Locking washer M6
124	614-10030	3	BOLT, Hex, M10 x 30, 8.8,
125	825-1410	5	NUT, M10, Cl 8,
126	06577052	8	WASHER, SPECIAL, Locking washer B10
132	614-10030	4	BOLT, Hex, M10 x 30, 8.8,
133	06577052	8	WASHER, SPECIAL, Locking washer B10
134	825-1410	4	NUT, M10, Cl 8,
136	614-10080	2	BOLT, Hex, M10 x 80, 8.8, Full Thd, Hex bolt M10x80ISO40178.8
137	825-1410	2	NUT, M10, Cl 8,
138	06577052	2	WASHER, SPECIAL, Locking washer B10
151	060533583	2	CIRCLIP, Snap ring 36x1,75-A3CDIN471
156	060533591	1	SENSOR, Angle sensor 424B10A050
157	061068525	3	BLOCK, Shim
162	06003805	2	SCREW, Cheese-head screw M4x25 DIN84 4.8
163	895-11004	2	WASHER, M4, Washer 4.3DIN125ST
164	893-11004	2	WASHER, LOCK, Ext Tooth, M4, Toothed washer A4,3 DIN6797 FST
165	614-10020	2	BOLT, Hex, M10 x 20, 8.8, Full Thd,
166	06708810	1	SPLIT PIN/SAFETY PIN, Spring clip 5DIN11024
167	895-11020	2	WASHER, M20 x 37 x 3, Washer 21 DIN125ST
169	06402730	1	PIN, SPLIT (COTTER), Splint pin 5x32 DIN94 ST
170	31297470	2	BLOCK, Shim
171	31316040	1	BLOCK, Shim
182	31328872	1	LINK, Link A-08B-1 DIN8187

B012-00.00.001 ПРОКЛАДКА

B012-00.00.001 ПРОКЛАДКА

B012-80.00.001 ПРОКЛАДКА

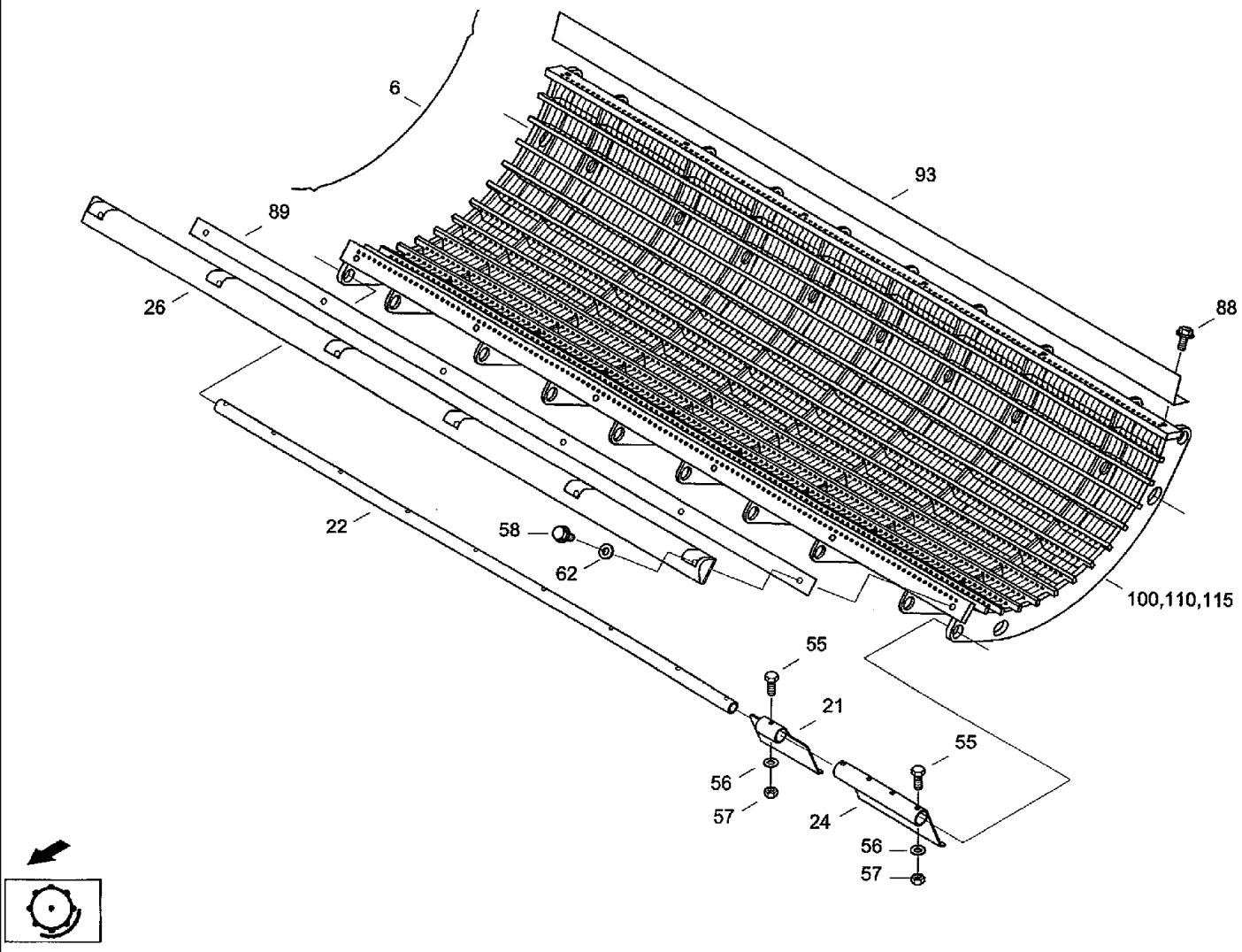

◀B120

CF80 CASE IH CROSS FLOW COMBINE

B130 THRESHING MECHANISM- CONCAVE

Ref	Part Number	Qty	Description
6	020242740	327	WIRE, Concave wire
21	020218402	5	FLAP, Door 5550-5401:011/03 заслонка
22	061001493	1	PIPE, Tube в014-00.00.003 труба
24	061001485	2	FLAP, Door в014-00.00.004 заслонка
26	31294628	1	RAIL, Infeed rail в014-20.00.000 планка подводящая
55	614-8040	7	BOLT, Hex, M8 x 40, 8.8, Full Thd, Hex, M8 x 40, 8.8, Full Thd
56	06577028	7	WASHER, SPECIAL, Locking washer M8
57	825-1408	7	NUT, M8, Cl 8,
58	864-10020	6	SCREW, Hex Soc Hd, M10 x 20, 8.8, Cheese-head screw M10x20DIN9128.8
62	06577052	6	WASHER, SPECIAL, Locking washer B10
88	003783688	6	SCREW, Verbus bolt W158.12-M10x16100
89	061019043	1	BLOCK, Backing в014-00.00.002 подкладка
93	061001790	1	RAIL, Guide rail в014-00.00.001 направляющая планка
100	061001364	1	CONCAVE, Concave 9,7
110	061000603	1	CONCAVE, Concave 7,5 в014-10.00.000 подбарабанье
115	31303792	1	CONCAVE, Concave 12,5

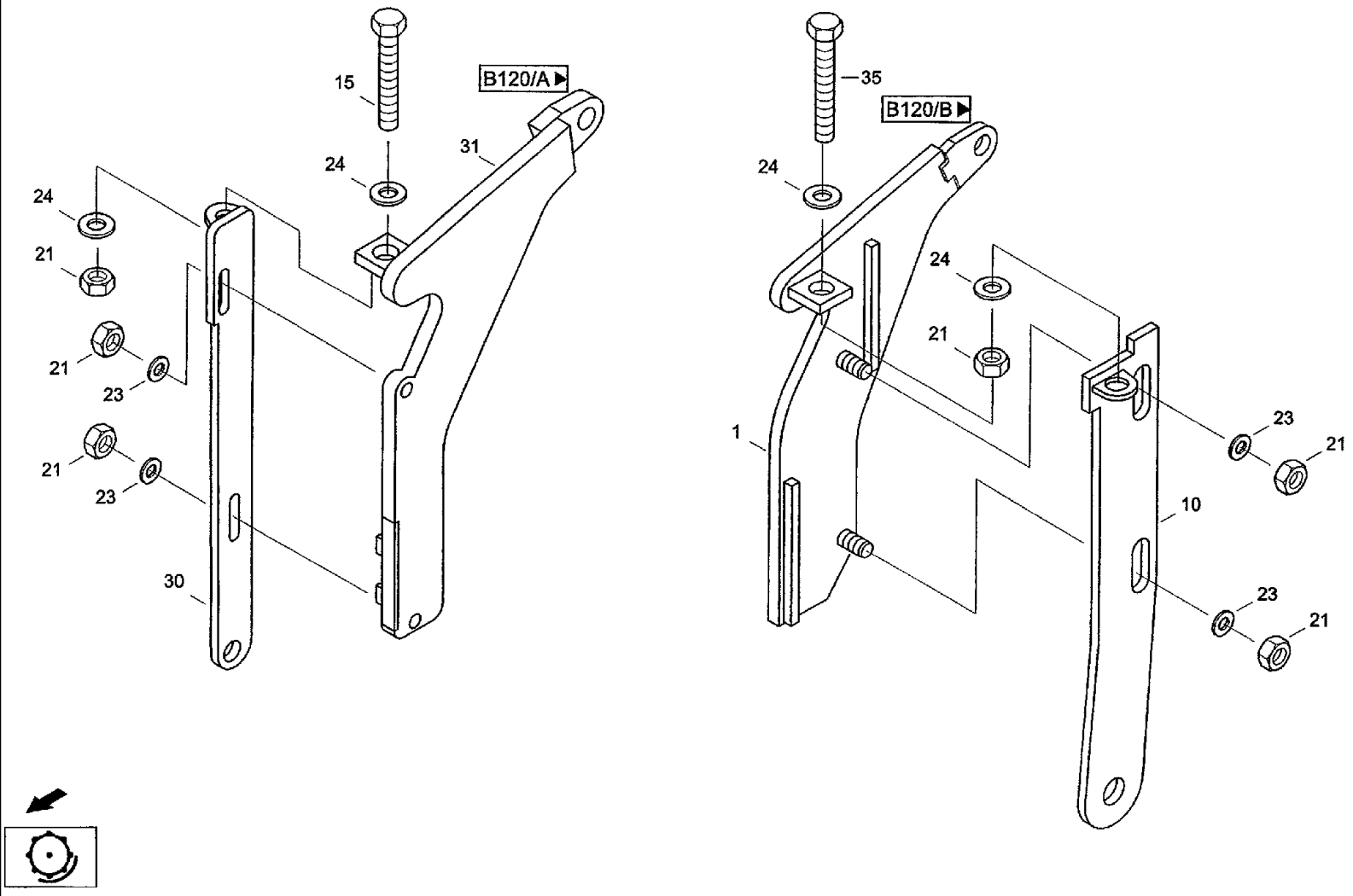
15
B120/A
31
24
24
21
21
23
21
23
30
35
B120/B
24
24
21
1
23
21
10
23
21

CF80 CASE IH CROSS FLOW COMBINE

B140 THRESHING MECHANISM- DRAWBAR

Ref	Part Number	Qty	Description
1	31345238	1	ROD, Drawbar B034-10.00.000 ТЯГА
10	31345262	1	SUPPORT, Coupling B034-20.00.000 КРОНШТЕЙН
15	814-12110	1	SCREW, Hex, M12 x 110, 8.8, Hex bolt M12x110IS040148.8
21	825-1412	6	NUT, M12, Cl 8, Hex nut M12 ISO4032 8
23	06577060	4	WASHER, Locking washer B12
24	895-11012	4	WASHER, M12 x 24 x 2.5, Washer 13DIN125ST
30	31345527	1	SUPPORT, Coupling B031-20.00.000 КРОНШТЕЙН
31	31345510	1	ROD, Drawbar B031-10.00.000 ТЯГА
35	827-12120	1	BOLT, Hex, M12 x 120, 10.9, Hex bolt M12x120 ISO4014 10.9

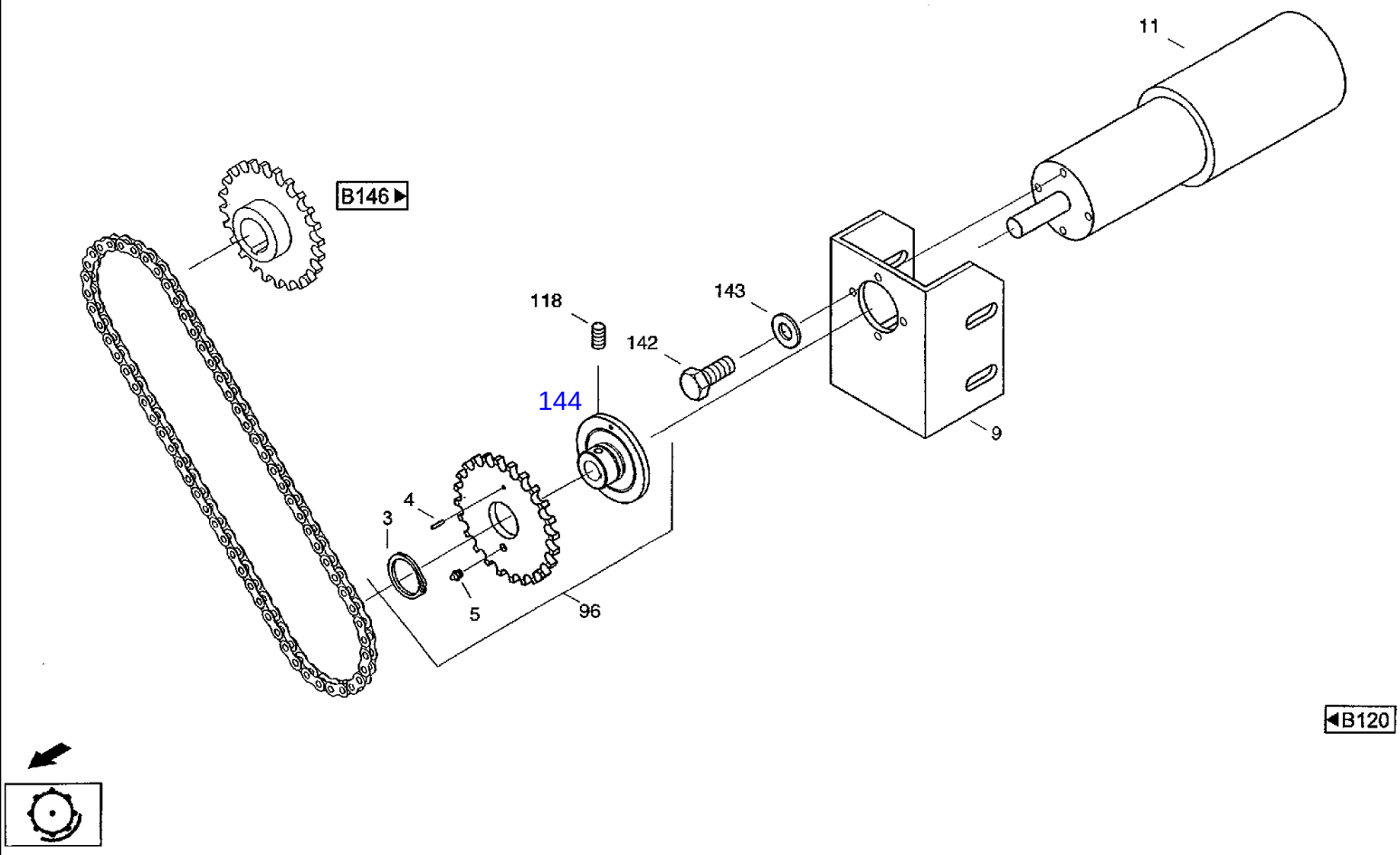
11
B146
118
143
142
144
9
4
3
5
96
B120

CF80 CASE IH CROSS FLOW COMBINE

B143 THRESHING MECHANISM- VARIABLE DELIVERY ENGINE

Ref	Part Number	Qty	Description
3	800-1130	1	RING, SNAP, M30, Ext, Snap ring 30x1,5DIN471
4	060526840	1	PIN, Notched dowel 3x12 DIN1472
5	03637285	1	NIPPLE, LUBE, Grease nippel AM6 DIN71412
9	061068478	1	HOLDER, Engine bracket B032-00.00.003 ДЕРЖАТЕЛЬ
11	060526832	1	MOTO-REDUCTION GEAR, Moto-reduction gear M80x40/l+P62
96	061051984	1	PINION, Sprocket Z24 B032-00.00.001 ЗВЕЗДОЧКА
118	006036805	1	SPLIT PIN/SAFETY PIN, Threaded pin M6x8-14H-A3C ISO7434
142	614-5016	4	BOLT, Hex, M5 x 16, 8.8, Full Thd, Hex bolt M5x16 ISO4017 8.8
143	060505321	4	PLATE, LOCKING, Locking washer M5
144		1	СТУПИЦА B032-00.00.002

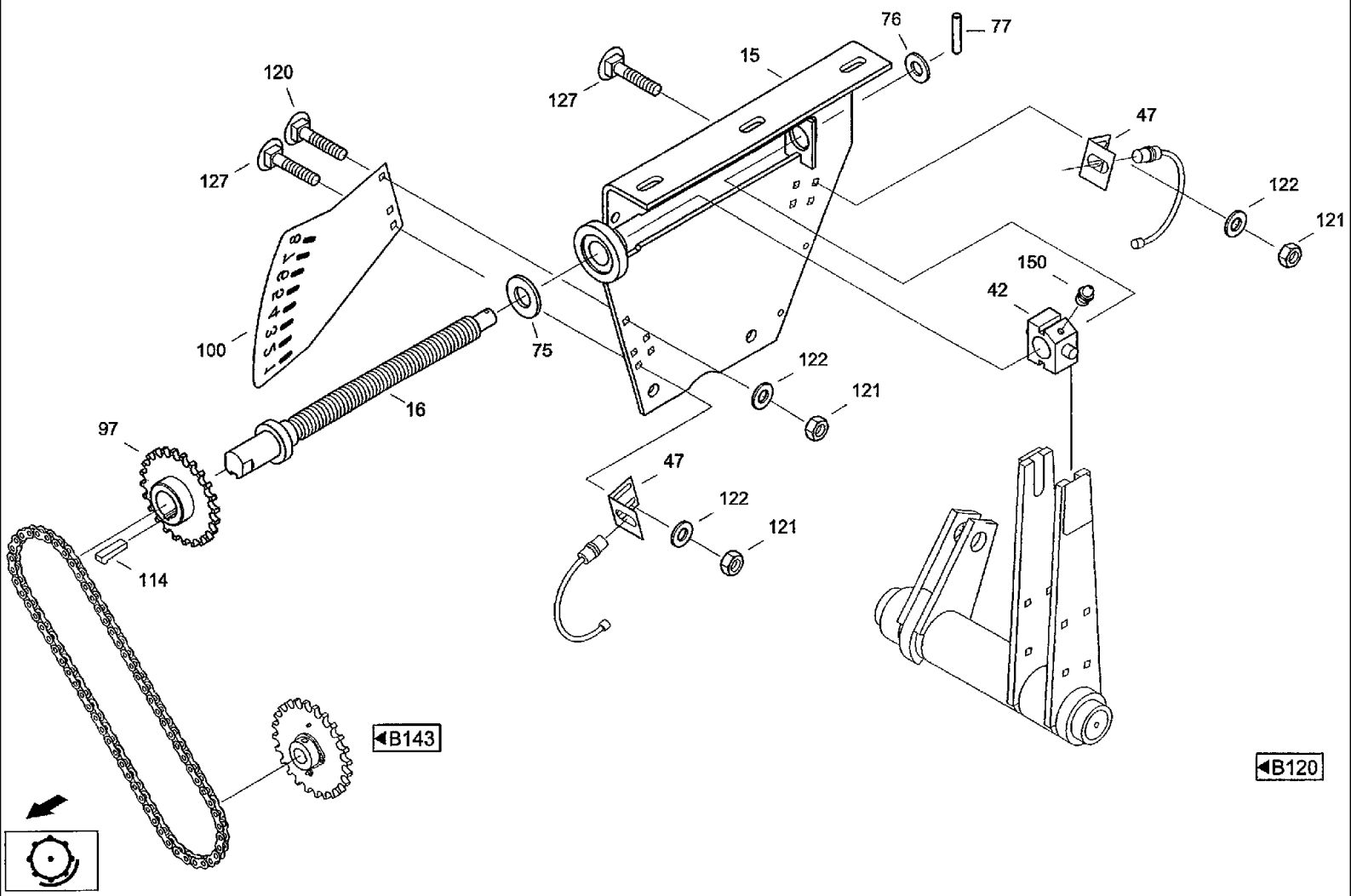
76
77
15
120
127
127
47
122
121
150
42
100
75
16
122
121
97
47
122
121
114
B143
B120

CF80 CASE IH CROSS FLOW COMBINE

B146 THRESHING MECHANISM- ADJUSTMENT

Ref	Part Number	Qty	Description
15	061067196	1	SUPPORT, Support panel B033-10.00.000 СТЕНКА
16	061051871	1	SHAFT, Adjusting shaft B033-20.00.000 РЕГУЛИРОВОЧНЫЙ ВАЛ
42	061051902	1	NUT, Regulation nut B033-00.00.002 УСТАНОВОЧНАЯ ГАЙКА
47	061068486	2	ANGLE, Angle B033-00.00.004 УГОЛОК
75	060526881	1	WASHER, THRUST, Thrust washer B033-00.00.005 РЕГУЛИРОВОЧНАЯ ШАЙБА
76	895-11016	1	WASHER, M16 x 30 x 3, Washer 17DIN125ST
77	06142003	1	PIN, Notched dowel 4x25/26 DIN 1473 ST
97	061052003	1	DRIVE SPROCKET, Sprocket Z24 B033-00.00.001 ЗВЕЗДОЧКА
100	061067155	1	PLATE, Segment B033-00.00.003 СЕГМЕНТ
114	060526904	1	KEY, Gib-head key 8x7x28 DIN6887
120	007751234	3	SCREW, Flat-round-head screw M6x20 DIN603 8.8
121	832-10406	5	NUT, M6 x 1, Cl 8, Hex nut M6 DIN982 8
122	06577036	5	WASHER, SPECIAL, Locking washer M6
127	711-6025	2	SCREW, M6 x 25, 8.8, Flat-round-head screw M6x25 DIN603 8.8
150	03629381	1	NIPPLE, LUBE, Grease nippel BM6DIN71412

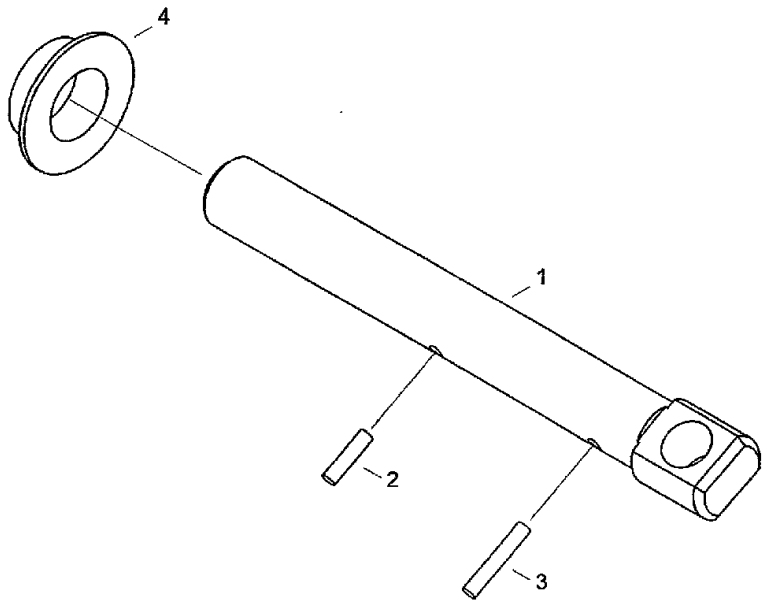

◀B120

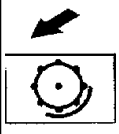

CF80 CASE IH CROSS FLOW COMBINE

B150 THRESHING MECHANISM- BOLT

Ref	Part Number	Qty	Description
1	061079761	1	PIN, LARGE, Bolt B015-00.00.001 ПАЛЕЦ
2	06149130	1	PIN, Notched dowel 5x20 DIN1474 ST
3	060533526	1	PIN, Notched dowel 5x30-ST DIN1474
4	061068437	1	BUSHING, Sleeve B015-00.00.002 ВТУЛКА

B170 THRESHING MECHANISM- CHECK CLOTH

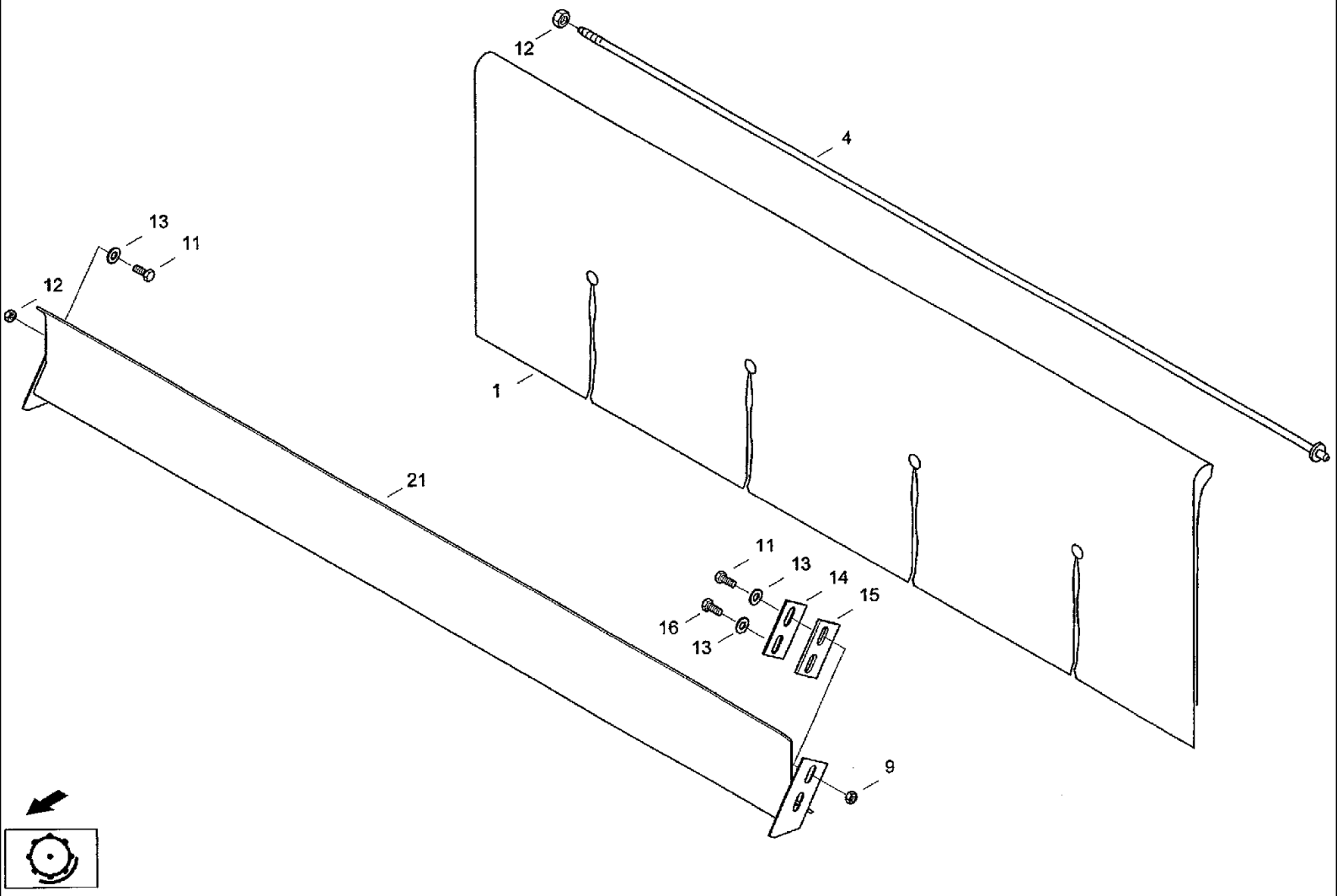

CF80 CASE IH CROSS FLOW COMBINE

B170 THRESHING MECHANISM- CHECK CLOTH

Ref	Part Number	Qty	Description
1	061001516	1	COVER, SKIRT, Check cloth B017-10.20.000 ФАРТУК ПОДБАРАБАНЬЯ
4	061001532	1	STEM, Through bolt B017-10.10.000 СТЕРЖЕНЬ
9	825-1412	2	NUT, M12, Cl 8, Hex nut M12 IS04032 8
11	614-12030	3	BOLT, Hex, M12 x 30, 8.8, Hex bolt M12x30ISO40178.8
12	825-1412	4	NUT, M12, Cl 8, Hex nut M12ISO40328
13	020947713	4	WASHER, Washer
14	060201725	1	BLOCK, Shim
15	060201733	1	BLOCK, Shim B017-20.00.001 ПРОКЛАДКА
16	614-12055	1	BOLT, Hex, M12 x 55, 8.8, Full Thd, Hex bolt M1 2x55180401 7 8.8
21	061079335	1	SHEET, Separating plate B017-20.10.000 ПРОФИЛЬНЫЙ ЩИТОК

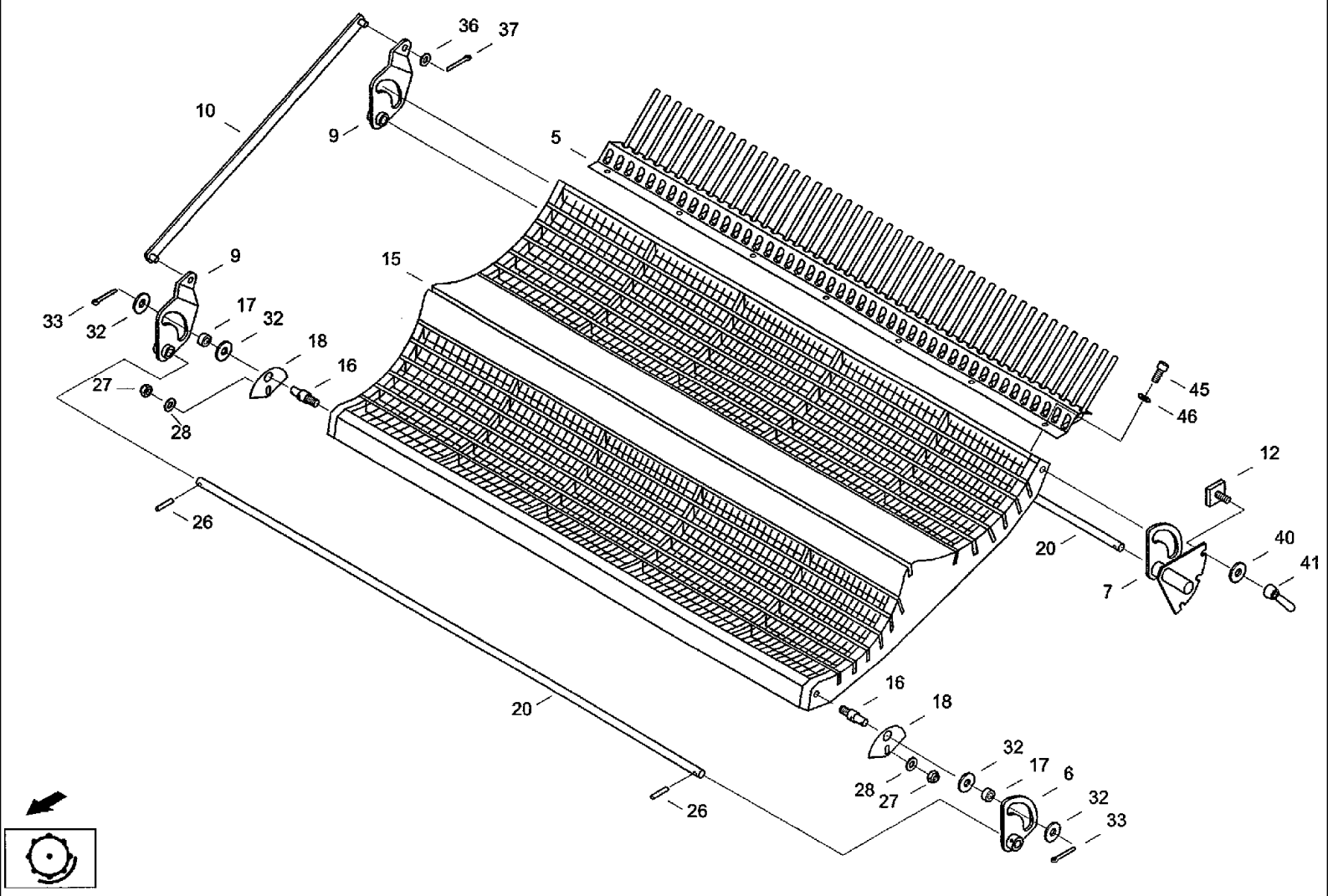
36
37
10
9
5
9
15
33
32
17
32
18
16
27
28
45
46
12
26
20
40
41
7
16
18
20
32
17
6
28
27
32
33
26

CF80 CASE IH CROSS FLOW COMBINE

B180 THRESHING MECHANISM- SEPARATING FACILITY

Ref	Part Number	Qty	Description
5	31304213	1	RAKE, Rake в018-20.00.000 выпускная граблина
6	061079302	1	LEVER, Eccentric lever LINKS в018-40.00.000 эксцентрикованный рычаг
7	061079296	1	LEVER, Adjuster в018-50.00.000 регулировачный рычаг
9	31286267	2	LEVER, Eccentric lever r в018-30.00.000 эксцентриковый рычаг
10	061079255	1	BAR, Conrod в018-60.00.000 связь
12	060140736	1	JUNCTION BOX, Screw block 525-38112:000 винтовая колодка
15	31301918	1	CONCAVE, Separating basket в018-10.00.000 сепарирующий короб
16	060140760	4	PIN, LARGE, Bolt 525-38100:016/04 палец
17	060140752	4	ROLLER, SHIFTER, Roller 525-38100:015/04 ролик
18	060140777	4	PANEL, Panel 525-38100:018/04 крышка батареи
20	061002115	2	SHAFT, Shaft в018-00.00.001 вал
26	838-5636	4	PIN, M6 x 36, Slotted, Roll pin 6x36 DIN 1481 FST
27	832-46408	4	NUT, LOCK, M8 x 1.25, Cl 8,
28	895-25008	4	WASHER, M8 x 20 x 1.6, Washer 8,4 DIN9021 140HV
32	003784430	8	WASHER, Washer A17-ST-A3C DIN9021 ШАЙБА
33	06401520	4	PIN, SPLIT (COTTER), Splint pin 4x25 DIN94 ST
36	895-11016	2	WASHER, M16 x 30 x 3, Washer 17DIN125ST
37	06401520	2	PIN, SPLIT (COTTER), Splint pin 4x25 DIN94 ST
40	895-25012	1	WASHER, M12 x 37 x 3, Washer 13DIN9021 140HV
41	06606821	1	THUMB SCREW, Conical handle N100 DIN99 006605966 КОНИЧЕСКАЯ РУЧКА
45	864-10025	6	SCREW, Hex Soc Hd, M10 x 25, 8.8, Cheese-head screw M10x25DIN9128.8
46	06577003	6	WASHER, SPECIAL, Locking washer M10

B190 THRESHING MECHANISM- STONE TRAP

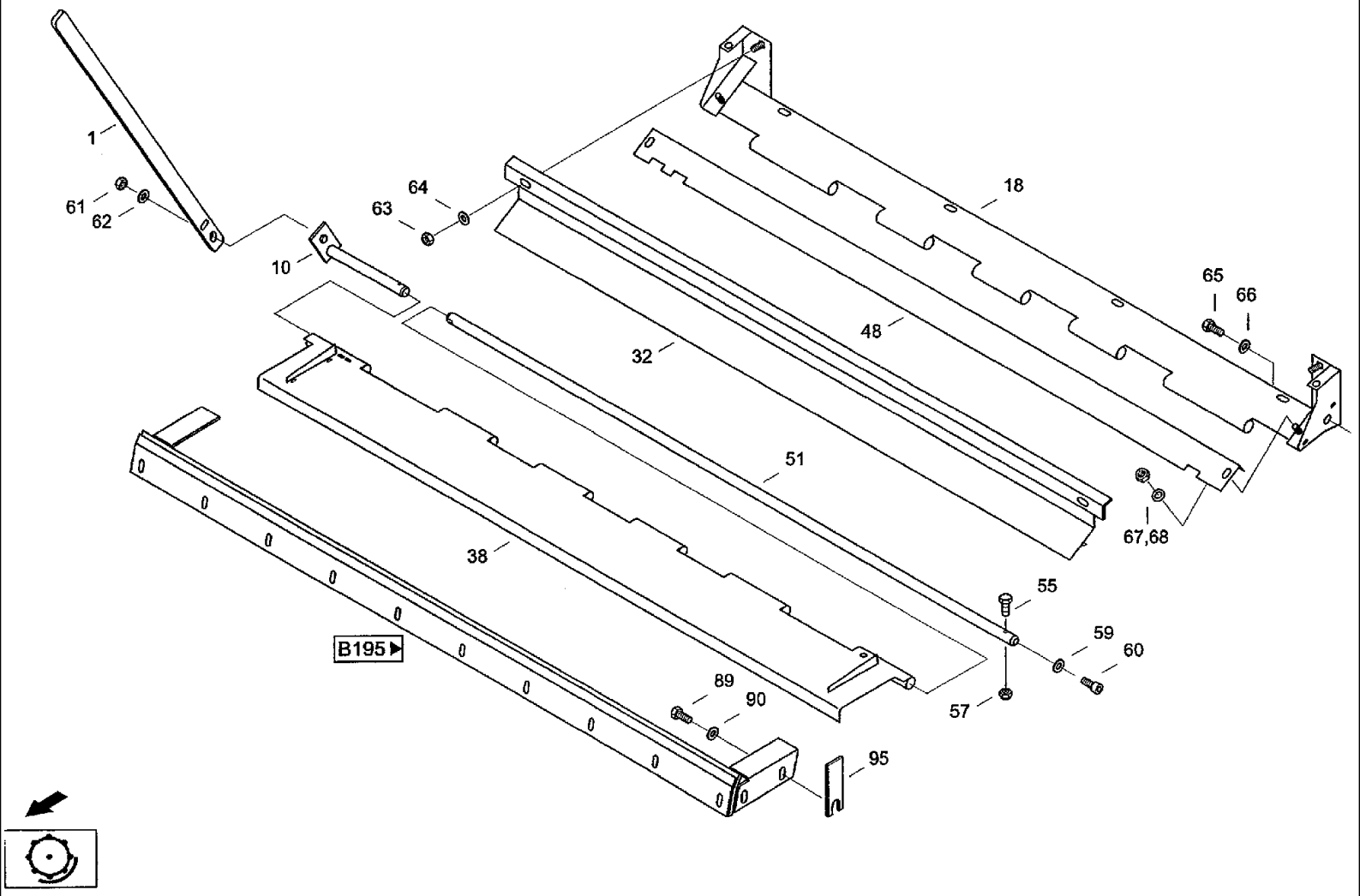

CF80 CASE IH CROSS FLOW COMBINE

B190 THRESHING MECHANISM- STONE TRAP

Ref	Part Number	Qty	Description	
1	31334733	1	LEVER, Lever	в019-00.00.001 рычаг
10	31334436	1	DRIVE DOG, Follower	в019-10.00.000 захват
18	061076010	1	TROUGH, Trough	в019-20.00.000 лоток
32	061017677	1	COVER, REAR, Rear wall	в019-30.00.000 задняя стенка
38	31341507	1	FLAP, Door	в019-40.00.000 заслонка
48	31341548	1	SHEET, Adjusting plate	в019-00.00.002 Установочный щит
51	31339006	1	ROTATOR, Axle	B019-00.00.001 Ось вращения
55	614-8035	3	BOLT, Hex, M8 x 35, 8.8, Hex bolt M8X35ISO40178.8	
57	832-10408	3	NUT, M8 x 1.25, Cl 8, Hex nut M8 DIN982 8	
59	97022011	1	SNAP RING, Locking ring VSK10 DIN	
60	962-10030	1	SCREW, Hex Soc Hd, M10 x 30, 10.9, Cheese-head screw M10x30DIN91210.9	
61	825-1412	1	NUT, M12, Cl 8, Hex nut M12 ISO4032 8	
62	06577060	1	WASHER, Locking washer B12	
63	825-1410	2	NUT, M10, Cl 8,	
64	06577052	2	WASHER, SPECIAL, Locking washer B10	
65	614-12025	2	BOLT, Hex, M12 x 25, 8.8, Hex bolt M12x25ISO40178.8	
66	06577060	2	WASHER, Locking washer B12	
67	825-1408	2	NUT, M8, Cl 8,	
68	06577028	2	WASHER, SPECIAL, Locking washer M8	
89	614-12025	4	BOLT, Hex, M12 x 25, 8.8, Hex bolt M 12x25 ISO4017 8.8	
90	06577011	4	PLATE, LOCKING, Locking washer M12	
95	31341958	1	BLOCK, Shim	

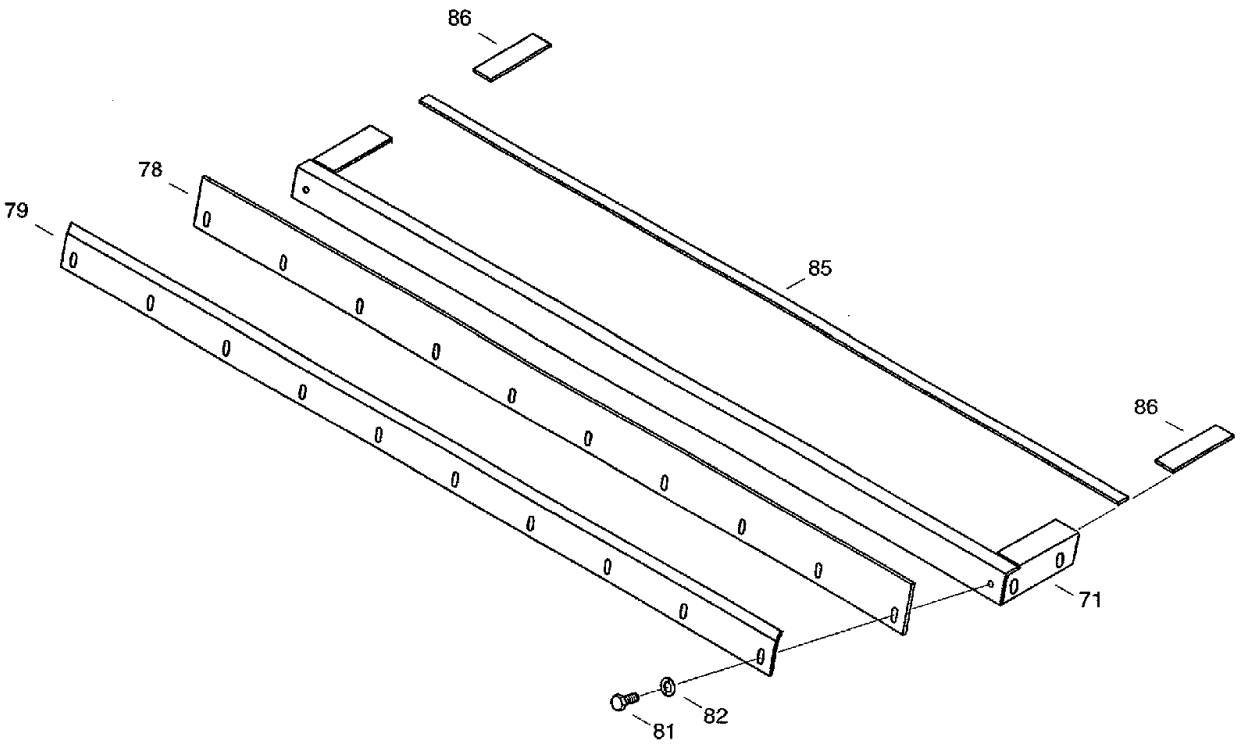

◀B190

CF80 CASE IH CROSS FLOW COMBINE

B195 THRESHING MECHANISM- FRAME

Ref	Part Number	Qty	Description
71	061076051	1	FRAME, Frame в021-10.00.000 рамка
78	061076092	1	GASKET, Seal в021-00.00.002 уплотнение
79	061076107	1	RAIL, Clamp rail в021-00.00.001 зажимная шина
81	614-8025	10	BOLT, Hex, M8 x 25, 8.8,
82	06577028	10	WASHER, SPECIAL, Locking washer M8
85	061076115	1	STRIP, SEALING, Seal V уплотнение
86	061076123	2	STRIP, SEALING, Seal LI-RE уплотнение

B220 THRESHING MECHANISM- STRAW WALKERS, VARIOUS COMPONENTS

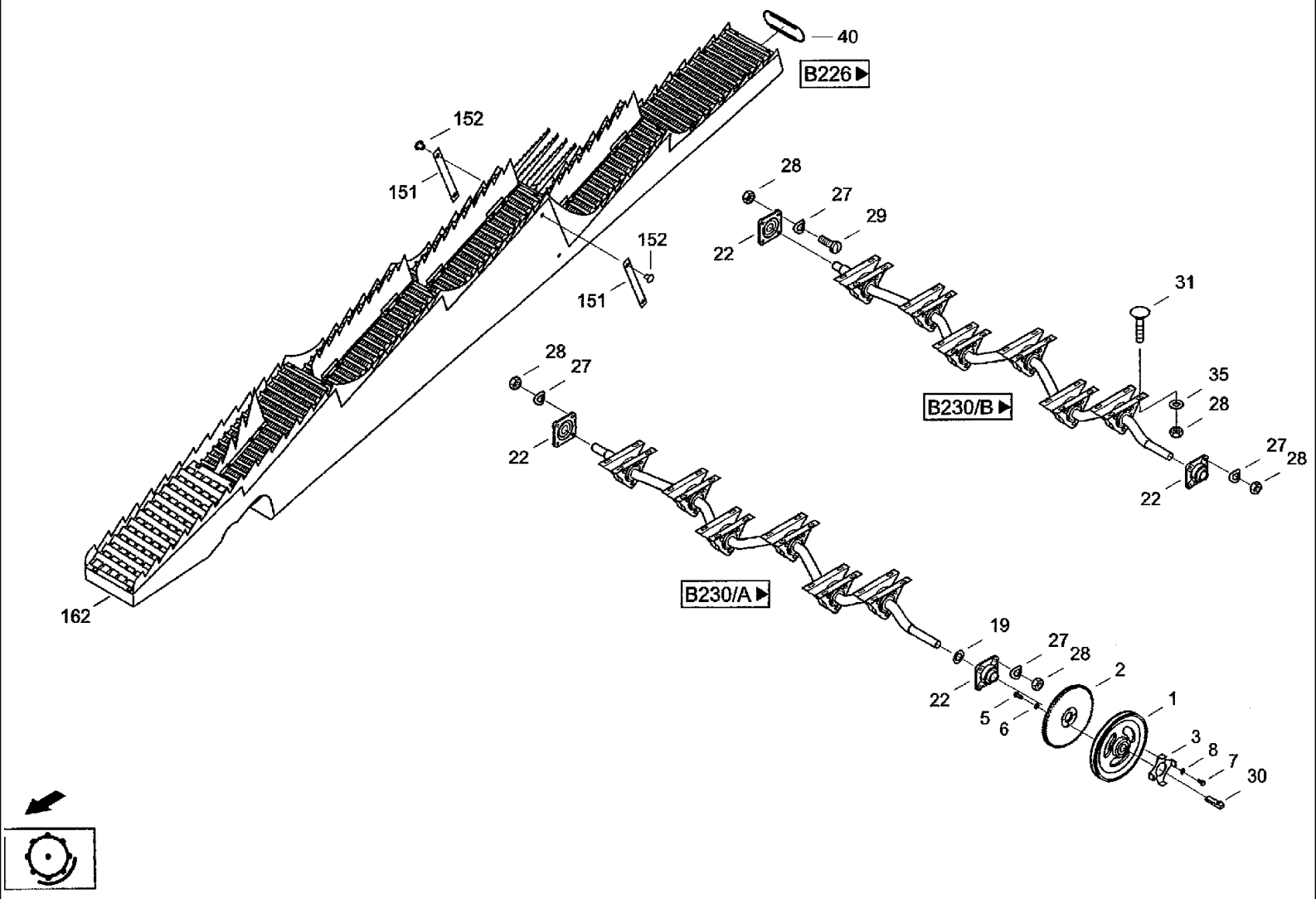

CF80 CASE IH CROSS FLOW COMBINE

B220 THRESHING MECHANISM- STRAW WALKERS, VARIOUS COMPONENTS

Ref	Part Number	Qty	Description	
1	31307240	1	GROOVED PULLEY, V-belt pulley GG-20 DIN1691	в022-60.00.001 шкив
2	061011060	1	PINION, Spur gear	в022-60.00.002 торцевое колесо
3	060152723	1	WASHER, SPECIAL, Washer	525-60908:003/04 шайба
5	614-8025	4	BOLT, Hex, M8 x 25, 8.8,	
6	06577028	4	WASHER, SPECIAL, Locking washer M8	
7	614-6016	2	BOLT, Hex, M6 x 16, 8.8,	
8	06577036	2	WASHER, SPECIAL, Locking washer M6	
19	020253880	6	BLOCK, Shim	5550-0900:093/04 прокладка
22	03671920	4	CARRIER, BEARING, Flanged bearing TGL20906-FGE206-(FWS30U NAC	
27	06577003	16	WASHER, SPECIAL, Locking washer M10	
28	825-1410	64	NUT, M10, Cl 8,	
29	06052854	16	SCREW, Fillister head screw M10x30 ISO7380 10.9	
30	03502343	1	KEY, Gib-head key 8x7x50 DIN6887	
31	07755576	48	SCREW, Flat-round-head screw M1 0x25 DIN603 8.8	
35	06577052	48	WASHER, SPECIAL, Locking washer B10	
40	020219130	6	COVER, Cap	5550-5601:062/23 крышка
151	31294435	7	RAIL, Rail ABS-SCHWA	в022-10.00.005 планка
152	06422236	14	RIVET, Rivet 4,8x16 ALU-ST	
162	31307257	6	STRAW WALKER, Vibrating tray	в022-20.00.000 клавиша соломотряса
163		6	ОПОРА	в022-00.00.003
164		6	ПЛИТА	в022-00.00.004

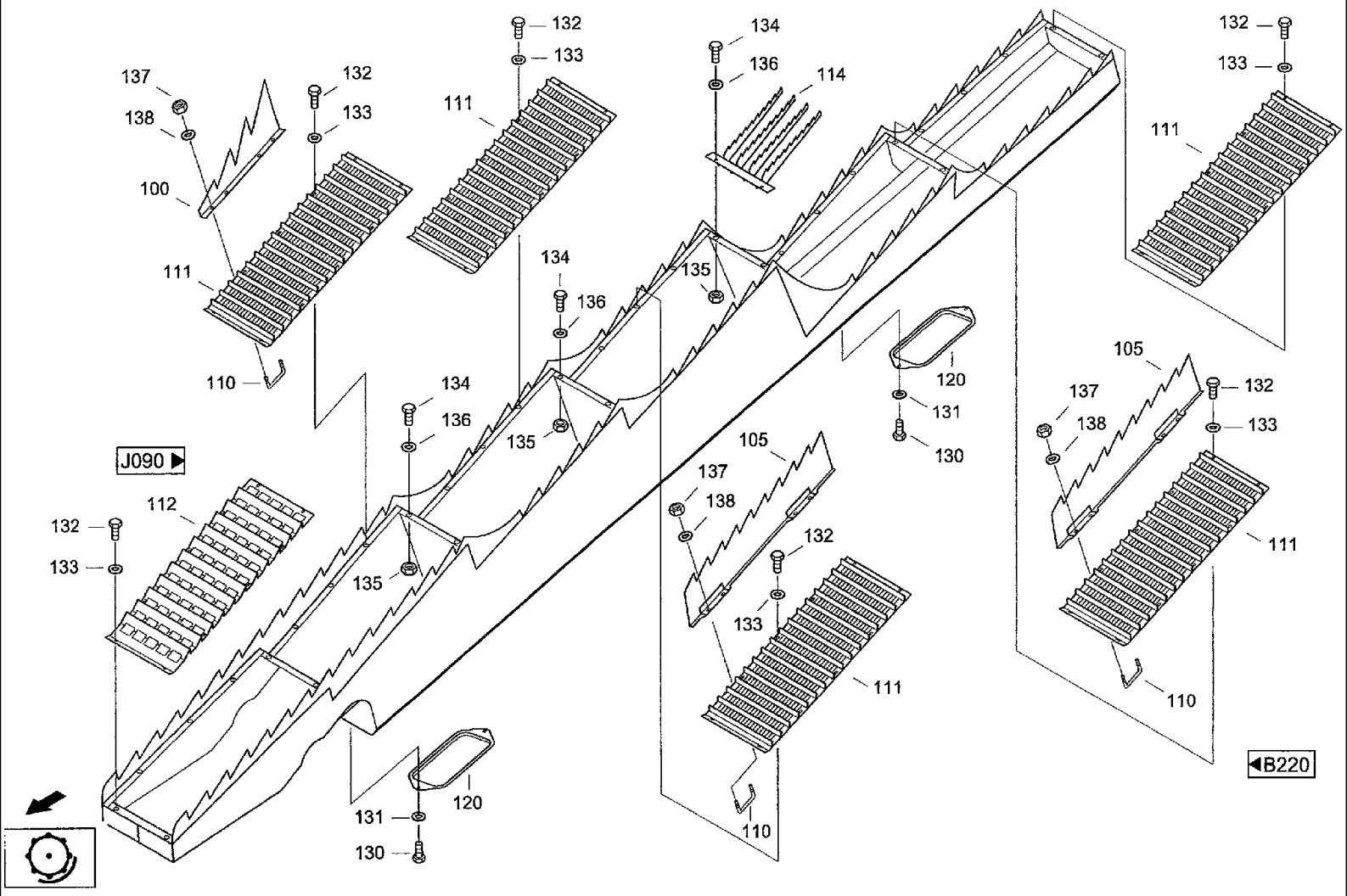
137
138
100
132
133
111
110
132
133
111
134
136
114
134
136
135
134
136
135
120
131
130
105
137
138
132
133
111
105
137
138
132
133
111
110
132
133
112
135
120
131
130
J090
B220

CF80 CASE IH CROSS FLOW COMBINE

B226 THRESHING MECHANISM- STRAW WALKERS

Ref	Part Number	Qty	Description	
100	31307160	1	RAIL, Conveyor rail	в022-10.00.003 гребенка
105	31307177	2	RAIL, Conveyor rail	в022-30.00.000 транспортирующая шина
110	31307208	6	STIRRUP, Bracket	в022-10.00.004 скоба
111	31307216	5	LINING, Vibrator lining	в022-10.00.001 покрытие соломотряса
112	31307224	1	LINING, Vibrator lining B	в022-10.00.002 покрытие соломотряса
114	31304158	1	SIEVE, Rake	в022-40.00.001 зубцы
120	020219114	2	BLOCK, Cap	5550-5601:060/03 крышка
130	614-6012	4	BOLT, Hex, M6 x 12, 8.8, Hex bolt M6x12ISO40178.8	
131	06577124	4	WASHER, Locking washer B6	
132	614-6012	54	BOLT, Hex, M6 x 12, 8.8, Hex bolt M6x12 ISO4017 8.8	
133	06577124	54	WASHER, Locking washer B6	
134	614-6016	6	BOLT, Hex, M6 x 16, 8.8,	
135	832-10406	6	NUT, M6 x 1, Cl 8, Hex nut M6 DIN982 8	
136	06577124	12	WASHER, Locking washer B6	
137	832-10406	12	NUT, M6 x 1, Cl 8, Hex nut M6 DIN982 8	
138	06577124	12	WASHER, Locking washer B6	

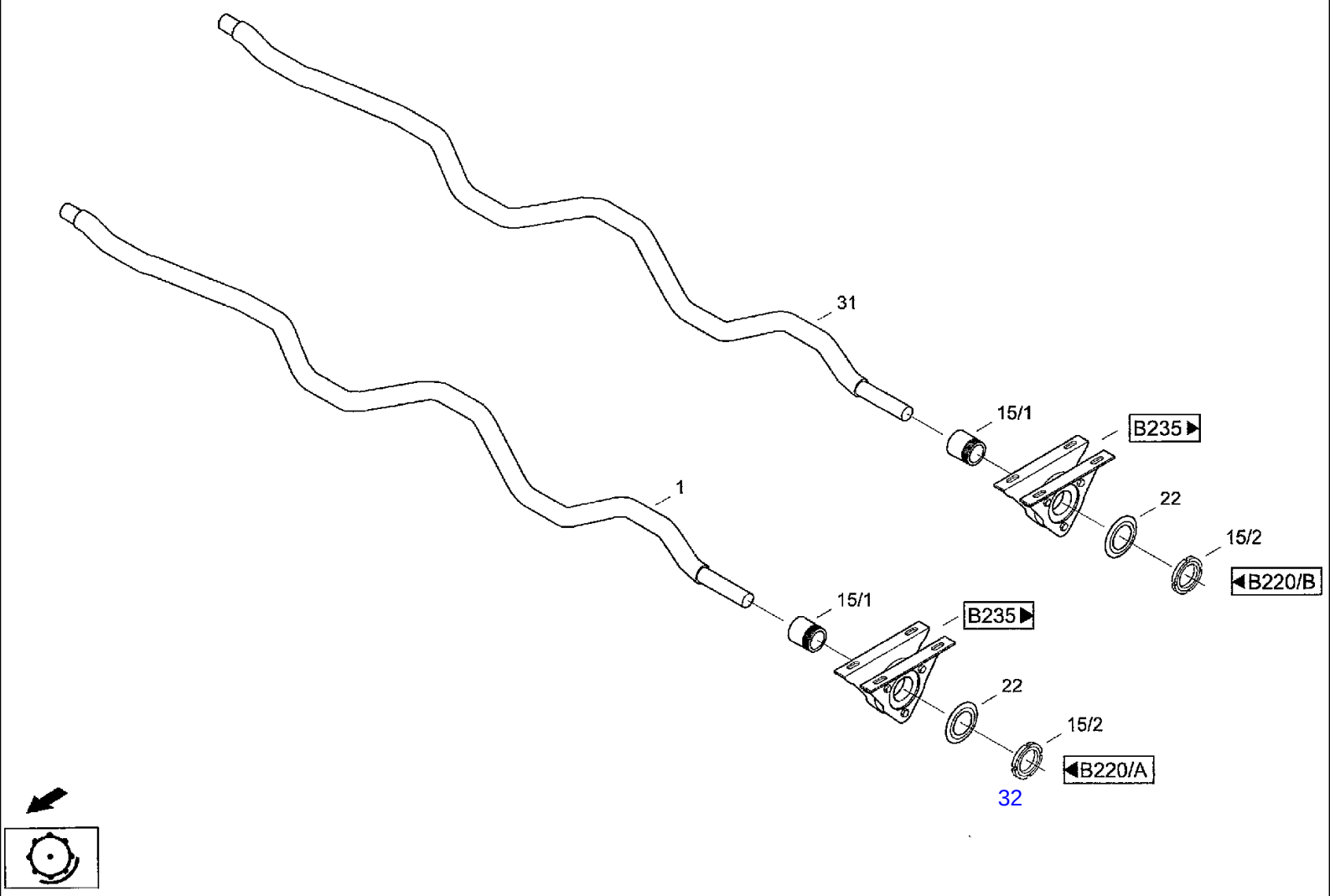
31
15/1
B235
22
15/2
B220/B
1
15/1
B235
22
15/2
B220/A
32

CF80 CASE IH CROSS FLOW COMBINE

B230 THRESHING MECHANISM- CRANKSHAFT

Ref	Part Number	Qty	Description	
1	31303575	1	CRANKSHAFT, Crankshaft V	
15	03674265	12	BUSHING, Tension sleeve H211/45D-SPEZ.	в022-50.00.005 зажимная втулка
22	31303591	12	WASHER, Washer	в022-50.00.007 шайба
31	31304535	1	CRANKSHAFT, Crankshaft h	
32		12		в022-50.00.006 гайка

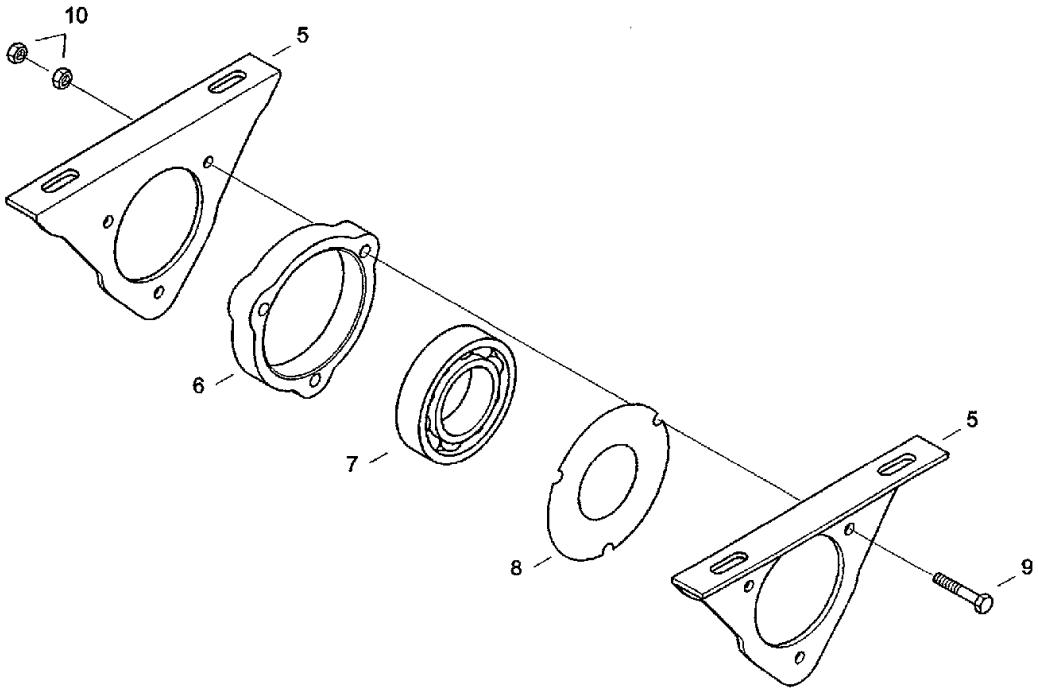

◀B230

CF80 CASE IH CROSS FLOW COMBINE

B235 THRESHING MECHANISM- BEARING

Ref	Part Number	Qty	Description
5	31303606	4	PLATE,SIDE, Side panel в022-50.00.001 боковая часть
6	31303614	2	BALL RACE, Bearing cup в022-50.00.002 корпус подшипника
7	03651941	2	BEARING, BALL, Grooved ball bearing 6211K-2RS1-C3
8	31303622	2	WASHER, Washer в022-50.00.003 шайба
9	814-8045	6	BOLT, Hex, M8 x 45, 8.8, Hex bolt M8x45 ISO4014 8.8
10	825-1408	12	NUT, M8, Cl 8,
11		1	ПРОКЛАДКА В022-50.00.004

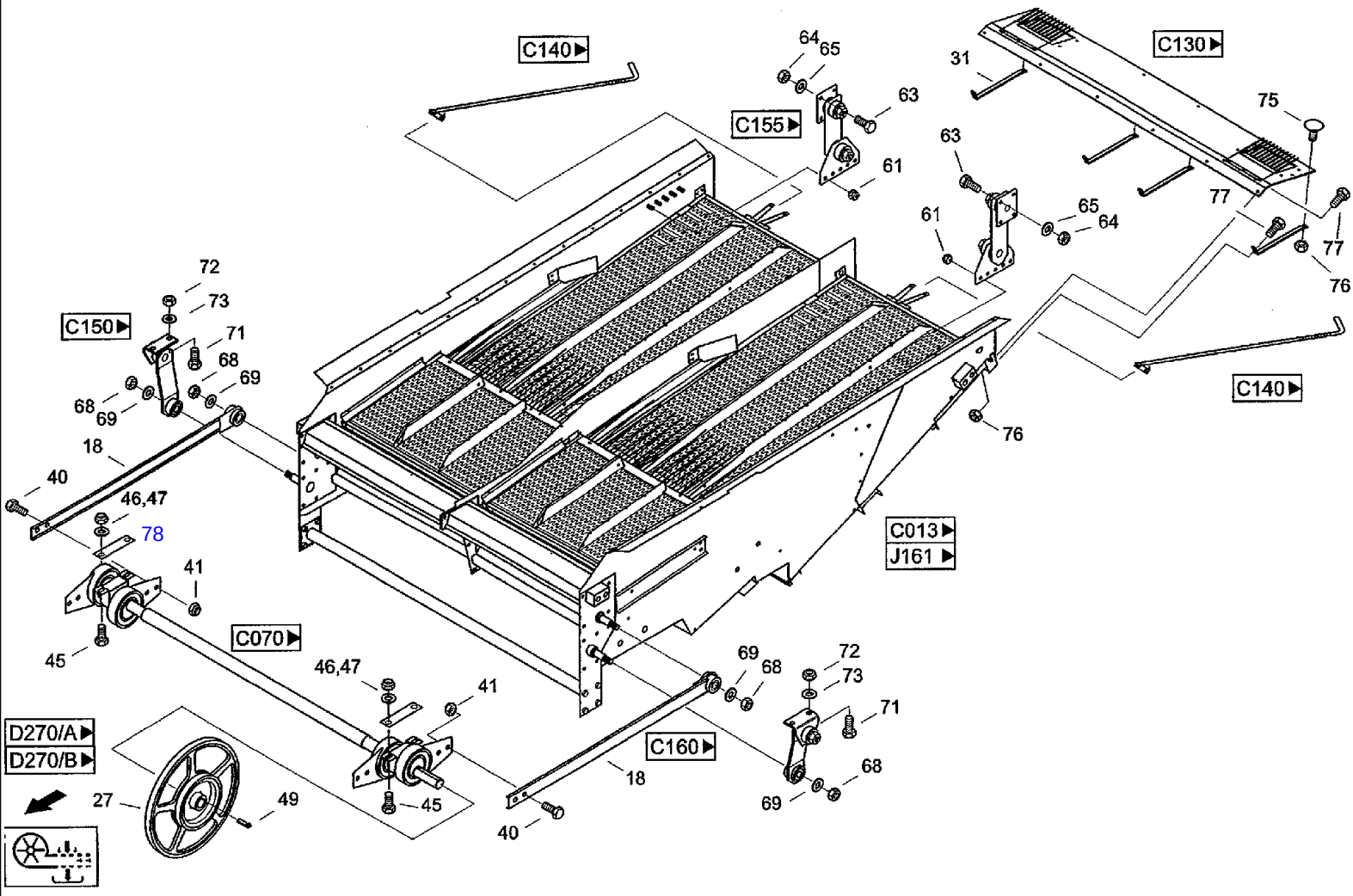
C140
64
65
C155
63
61
C130
31
75
63
61
65
64
77
77
76
C140
76
72
73
C150
71
68
69
68
69
18
40
46,47
78
41
C070
45
46,47
41
45
C160
18
40
69
68
72
73
71
68
69
C013
J161
D270/A
D270/B
27
49

CF80 CASE IH CROSS FLOW COMBINE

C010 CLEANING- VARIOUS COMPONENTS

Ref	Part Number	Qty	Description
18	31320141	2	ROD, CONNECTING, Pushrod 528-51118:001 толкающая штанга
27	060111530	1	GROOVED PULLEY, V-belt pulley RZ 061 001477 527-51100:027 шкив
31	31343855	4	SUPPORT, Support CF80-51131:000 опора
40	06070936	4	SCREW, Tensilock bolt W151.12-M16X30 100
41	060153306	4	NUT, Verbus nut W196.1-M1610
45	814-14060	4	BOLT, Hex, M14 x 60, 8.8, Hex, M14 x 60, 8.8 IS04014
46	825-1414	8	NUT, M14, Cl 8, Hex nut M14IS040328
47	060518125	4	WASHER, Washer MDW-N14510-14,5x3 2X4-RST шайба
49	03502497	1	KEY, Gib-head key 12x8x63 DIN6887 шпонка
61	832-46410	10	NUT, LOCK, M10 x 1.5, Cl 8, Hex nut VM10 DIN980 8
63	614-10025	8	BOLT, Hex, M10 x 25, 8.8, Full Thd, Hex bolt M10x25ISO40178.8
64	825-1410	8	NUT, M10, Cl 8,
65	06577003	8	WASHER, SPECIAL, Locking washer M10
68	832-10420	4	NUT, M20 x 2.5, Cl 8, Hex nut M20 DIN982 8
69	06513183	4	WASHER, Washer 21 DIN6916
71	614-10030	4	BOLT, Hex, M10 x 30, 8.8,
72	825-1410	4	NUT, M10, Cl 8,
73	06577003	4	WASHER, SPECIAL, Locking washer M10
75	060512216	4	SCREW, Flat-round-head screw M6x16-A3C CN 20 0152 BENR. 636
76	832-10406	4	NUT, M6 x 1, Cl 8, Hex nut M6 DIN982 8
77	614-6016	10	BOLT, Hex, M6 x 16, 8.8,
78		2	подкладка 524-51100:029/04

CF80 CASE IH CROSS FLOW COMBINE

C013(01) CLEANING- SCREEN

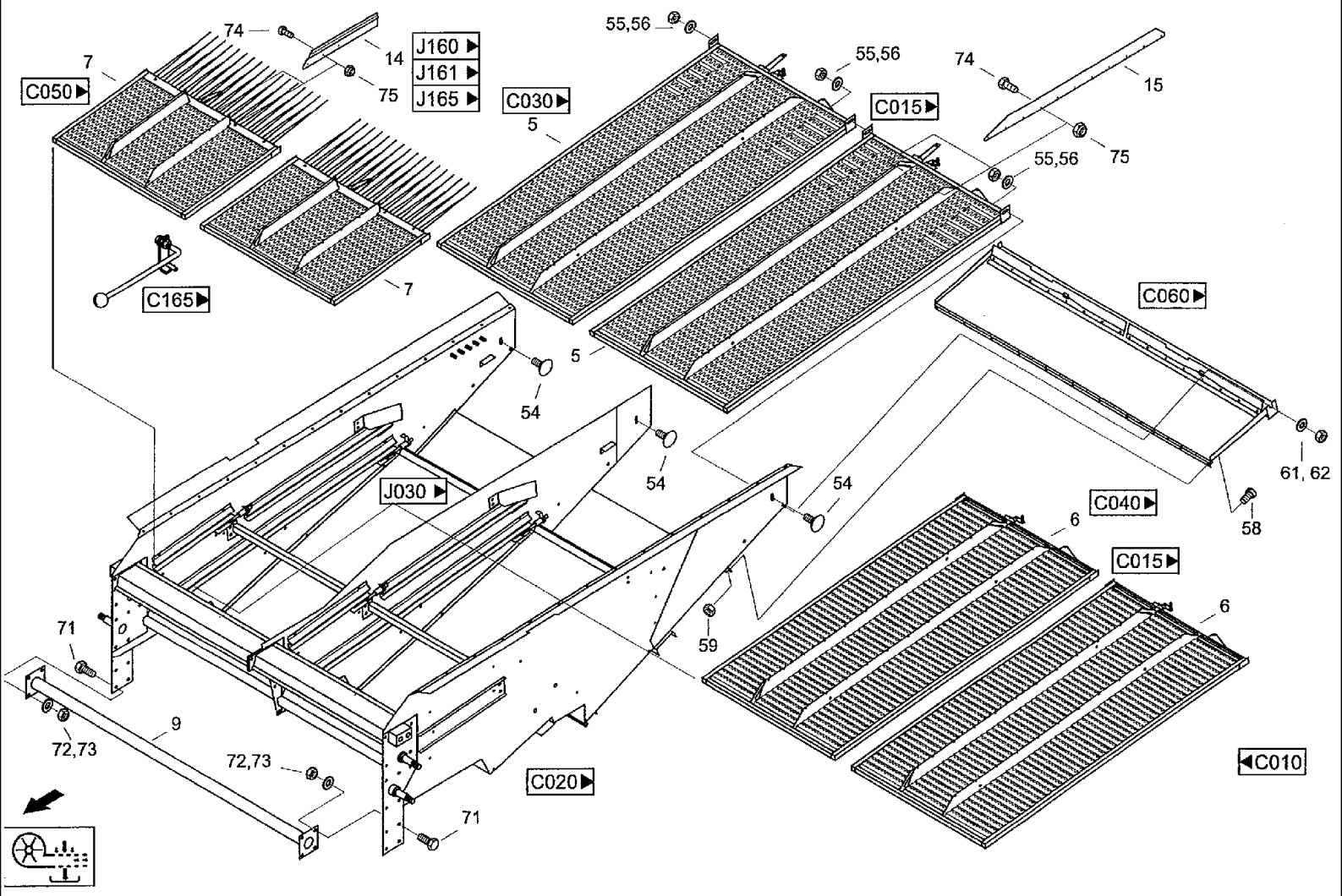

CF80 CASE IH CROSS FLOW COMBINE

C013(01) CLEANING- SCREEN

Ref	Part Number	Qty	Description
5	061069903	2	SIEVE, Flap sieve 528-51105:000 верхнее решето
6	061069911	2	SIEVE, Lower flap sieve 528-51106:000 нижнее решето
7	061033476	2	SIEVE, Cascade section 527-51107:000 каскадное решето
9	021007795	1	CROSSBAR, Traverse 9504/73516 траверса
14	021010516	4	CATWALK, Divider 1603/84600 направляющая перегородка
15	061011872	4	CATWALK, Divider 527-91800:002 направляющая перегородка
54	07755576	3	SCREW, Flat-round-head screw M10x25DIN6038.8
55	825-1410	3	NUT, M10, Cl 8,
56	06577052	3	WASHER, SPECIAL, Locking washer B10
58	840-3616	11	SCREW, Sltd Pan Hd, M6 x 16, Lens-head screw M6x16 DIN85 4.8
59	832-10406	11	NUT, M6 x 1, Cl 8, Hex nut M6 DIN982 8
61	832-46410	2	NUT, LOCK, M10 x 1.5, Cl 8, Hex nut VM10DIN9808
62	06510285	2	WASHER, Washer 10,5 DIN9021 100HV
71	614-10030	2	BOLT, Hex, M10 x 30, 8.8,
72	825-1410	2	NUT, M10, Cl 8,
73	06577003	2	WASHER, SPECIAL, Locking washer M10
74	614-4010	28	BOLT, Hex, M4 x 10, 8.8, Full Thd, Hex bolt M4x10ISO40178.8
75	832-46404	28	NUT, LOCK, M4 x .7, Cl 8, Hex nut VM4 DIN980 8

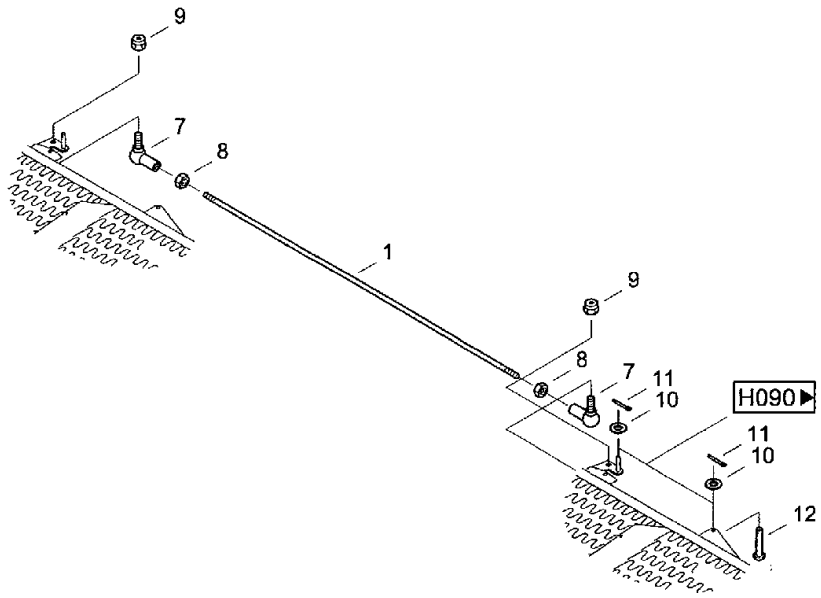

C013

CF80 CASE IH CROSS FLOW COMBINE

C013(02) CLEANING- SCREEN [CF80K]

Ref	Part Number	Qty	Description
5	31351203	2	SIEVE, Flap sieve
6	31351211	2	SIEVE, Lower flap sieve
7	061033476	2	SIEVE, Cascade section
9	021007795	1	CROSSBAR, Traverse
14	021010516	4	CATWALK, Divider
15	061011872	4	CATWALK, Divider
54	07755576	3	SCREW, Flat-round-head screw M10x25 DIN603 8.8
55	825-1410	3	NUT, M10, Cl 8,
56	06577052	3	WASHER, SPECIAL, Locking washer B10
58	840-3616	11	SCREW, Sltd Pan Hd, M6 x 16, Lens-head screw M6x16DIN854.8
59	832-10406	11	NUT, M6 x 1, Cl 8, Hex nut M6 DIN982 8
61	832-46410	2	NUT, LOCK, M10 x 1.5, Cl 8, Hex nut 10DIN9808
62	06510285	2	WASHER, Washer 10.5DIN9021 100HV
71	614-10030	2	BOLT, Hex, M10 x 30, 8.8,
72	825-1410	2	NUT, M10, Cl 8,
73	06577003	2	WASHER, SPECIAL, Locking washer M10
74	614-4010	28	BOLT, Hex, M4 x 10, 8.8, Full Thd, Hex bolt M4x10ISO40178.8
75	832-46404	28	NUT, LOCK, M4 x .7, Cl 8, Hex nut 4 DIN980 8

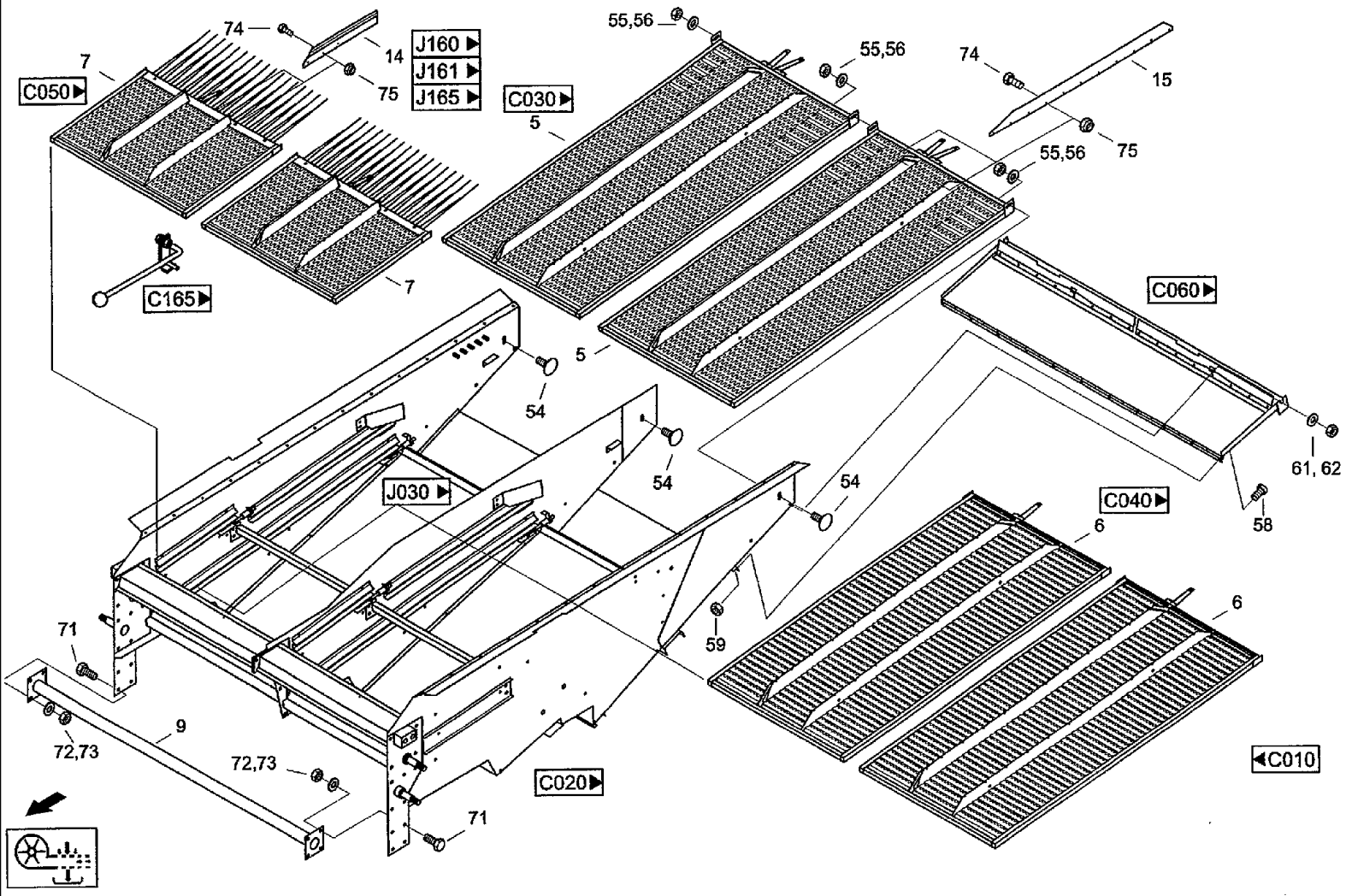
74
14
75
7
C050
J160
J161
J165
55,56
C030
5
55,56
74
15
75
55,56
C165
7
C060
5
54
54
54
J030
C040
6
58
61, 62
6
59
71
9
72,73
72,73
C020
C010
71

CF80 CASE IH CROSS FLOW COMBINE

C015 CLEANING- ADJUSTING UNIT [CF80K]

Ref	Part Number	Qty	Description
1	31338511	2	THREADED ROD, Adjusting rod
7	060501881	4	JOINT, Angle joint AS13DIN71802
8	825-1408	4	NUT, M8, Cl 8,
9	832-46408	4	NUT, LOCK, M8 x 1.25, Cl 8,
10	895-11006	4	WASHER, M6, Washer 6.4DIN125ST
11	733-1610	4	PIN, SPLIT (COTTER), M1.6 x 10, Splint pin 1,6x10DIN94ST
12	060150256	2	PIN, LARGE, Bolt B6H11x35x31 DIN1444 ST

CF80 CASE IH CROSS FLOW COMBINE

C020(01) CLEANING- SIEVE PAN

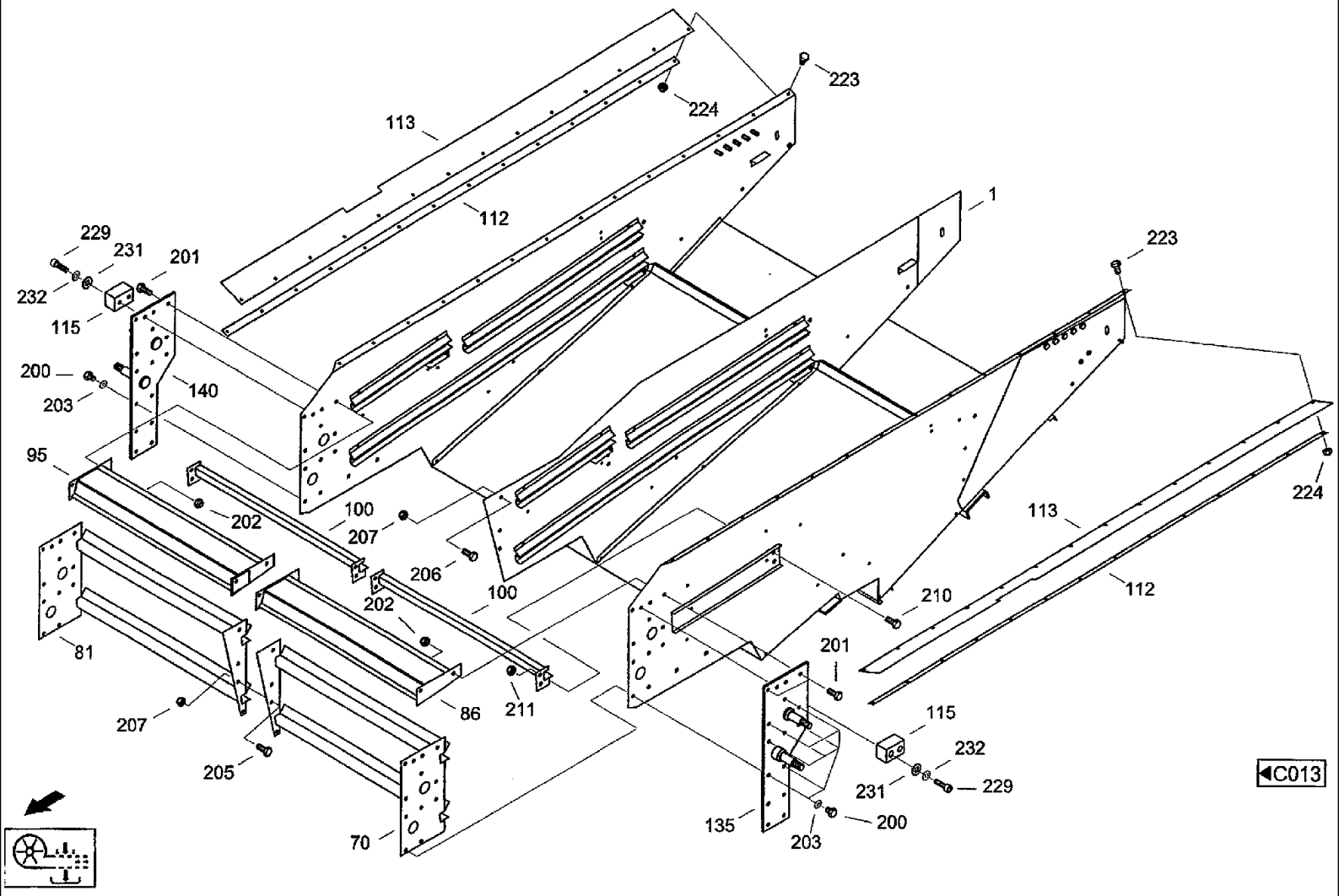

CF80 CASE IH CROSS FLOW COMBINE

C020(01) CLEANING- SIEVE PAN

Ref	Part Number	Qty	Description
1	061070704	1	CASE ASSY., Box 528-51103:001 ящик очистки
70	061070913	1	CONNECTION, Crosslink LINKS 528-51103:070 поперечное соединение л.
81	061070946	1	CONNECTION, Crosslink RECHTS 528-51103:081 поперечное соединение п.
86	061005720	1	DEFLECTOR, Guide plate LINKS 527-51102:086 направляющий щиток
91	061017917	1	SCREW, Clamping screw 527-51102:091 стяжной винт
95	061005737	1	DEFLECTOR, Guide plate RECHTS 527-51102:095 направляющий щиток
96	061017933	3	SCREW, Clamping screw 527-51102:096/04 стяжной винт
100	021006214	2	STOP, Stop 1403/73706 упор
101	021006222	1	SCREW, Clamping screw 2204/73707 стяжной винт
102	021006230	3	SCREW, Clamping screw 3004/73708 стяжной винт
103	021006247	4	SUPPORT, Bracket 4704/73709 крепление
104	31287846	2	GUIDE, Guide 528-51103:104 направляющая
105	31285852	2	BLOCK, Shim 528-51103:105 прокладка
108	060111635	2	DEFLECTOR, Guide plate LINKS 528-51102:108 направляющий щиток
109	060111643	2	DEFLECTOR, Guide plate RECHTS 528-51102:108-01 направляющий щиток
111	021006263	4	ANGLE BAR, Angle 6304/73700 уголок
112	061070962	2	RAIL, Rail 528-51103:112 шина
113	061070954	2	GASKET, Seal NBR DIN 1629 528-51103:113 прокладка
115	31299698	4	SPACER, Block 528-51103:115 колодка
135	31320117	1	PLATE, PIVOT, Plate with bolts l 528-51103:135 пластина
140	31320133	1	PLATE, PIVOT, Plate with bolts r 528-51103:140 пластина
160	061038167	4	SUPPORT, Bracket 527-51102:160/04 крепление
200	614-10016	16	BOLT, Hex, M10 x 16, 8.8, Full Thd, Hex bolt M10X16ISO40178.8
201	614-10030	4	BOLT, Hex, M10 x 30, 8.8,
202	832-46410	4	NUT, LOCK, M10 x 1.5, Cl 8, Hex nut VM10DIN9808

CF80 CASE IH CROSS FLOW COMBINE

C020(02) CLEANING- SIEVE PAN

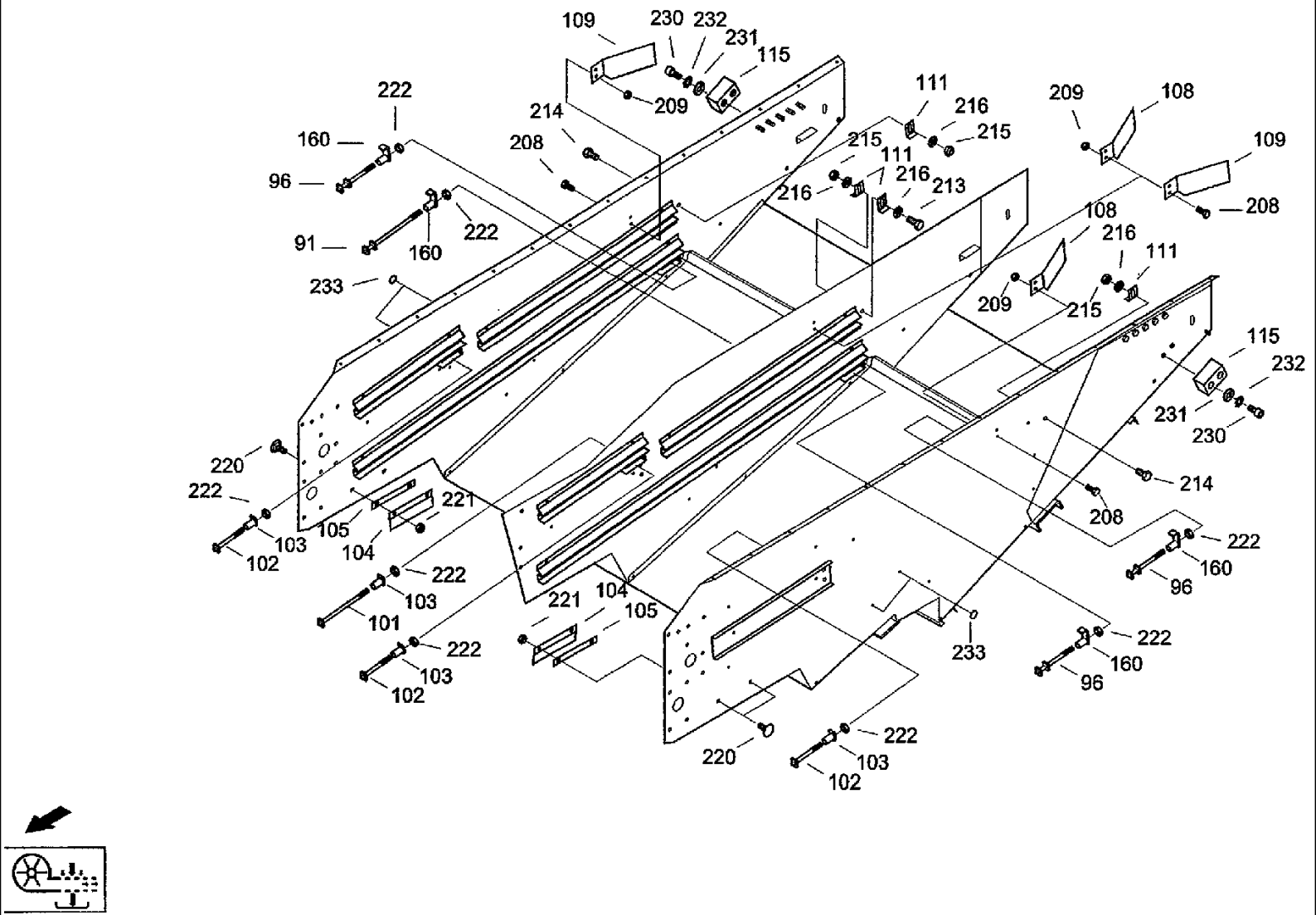

CF80 CASE IH CROSS FLOW COMBINE

C020(02) CLEANING- SIEVE PAN

Ref	Part Number	Qty	Description
203	893-11010	16	WASHER, LOCK, Ext Tooth, M10, Toothed washer A10.5 DIN6797 FST
205	614-10020	3	BOLT, Hex, M10 x 20, 8.8, Full Thd,
206	614-10030	2	BOLT, Hex, M10 x 30, 8.8,
207	832-46410	5	NUT, LOCK, M10 x 1.5, Cl 8, Hex nut VM10DIN9808
208	614-6012	4	BOLT, Hex, M6 x 12, 8.8, Hex bolt M6x12 ISO4017 8.8
209	832-46406	4	NUT, LOCK, M6 x 1, Cl 8,
210	614-10020	6	BOLT, Hex, M10 x 20, 8.8, Full Thd,
211	832-46410	6	NUT, LOCK, M10 x 1.5, Cl 8, Hex nut VM10DIN9808
213	614-10025	1	BOLT, Hex, M10 x 25, 8.8, Full Thd, Hex bolt M10x25IS040178.8
214	614-10020	2	BOLT, Hex, M10 x 20, 8.8, Full Thd,
215	825-1410	1	NUT, M10, Cl 8,
216	06577052	4	WASHER, SPECIAL, Locking washer B10
220	07753092	4	SCREW, Flat-round-head screw M8x20 DIN603 8.8
221	832-10408	4	NUT, M8 x 1.25, Cl 8, Hex nut M8 DIN982 8
222	832-46410	8	NUT, LOCK, M10 x 1.5, Cl 8, Hex nut VM10DIN9808
223	614-4016	28	BOLT, Hex, M4 x 16, 8.8, Full Thd,
224	006267136	28	NUT, Hex nut M4 DIN985 8
229	864-8040	4	SCREW, Hex Soc Hd, M8 x 40, 8.8, Cheese-head screw M8x40DIN9128.8
230	864-8030	4	SCREW, Hex Soc Hd, M8 x 30, 8.8, Cheese-head screw M8X30 DIN912 8.8
231	895-11008	8	WASHER, M8 x 16 x 1.6, Washer 8.4DIN125ST
232	06506826	8	DISC, NOTCHED, Toothed washer J8,4 DIN6797 FST
233	060512931	4	COVER, PROTECTIVE, Cap

C030(01) CLEANING- FLAP SIEVE

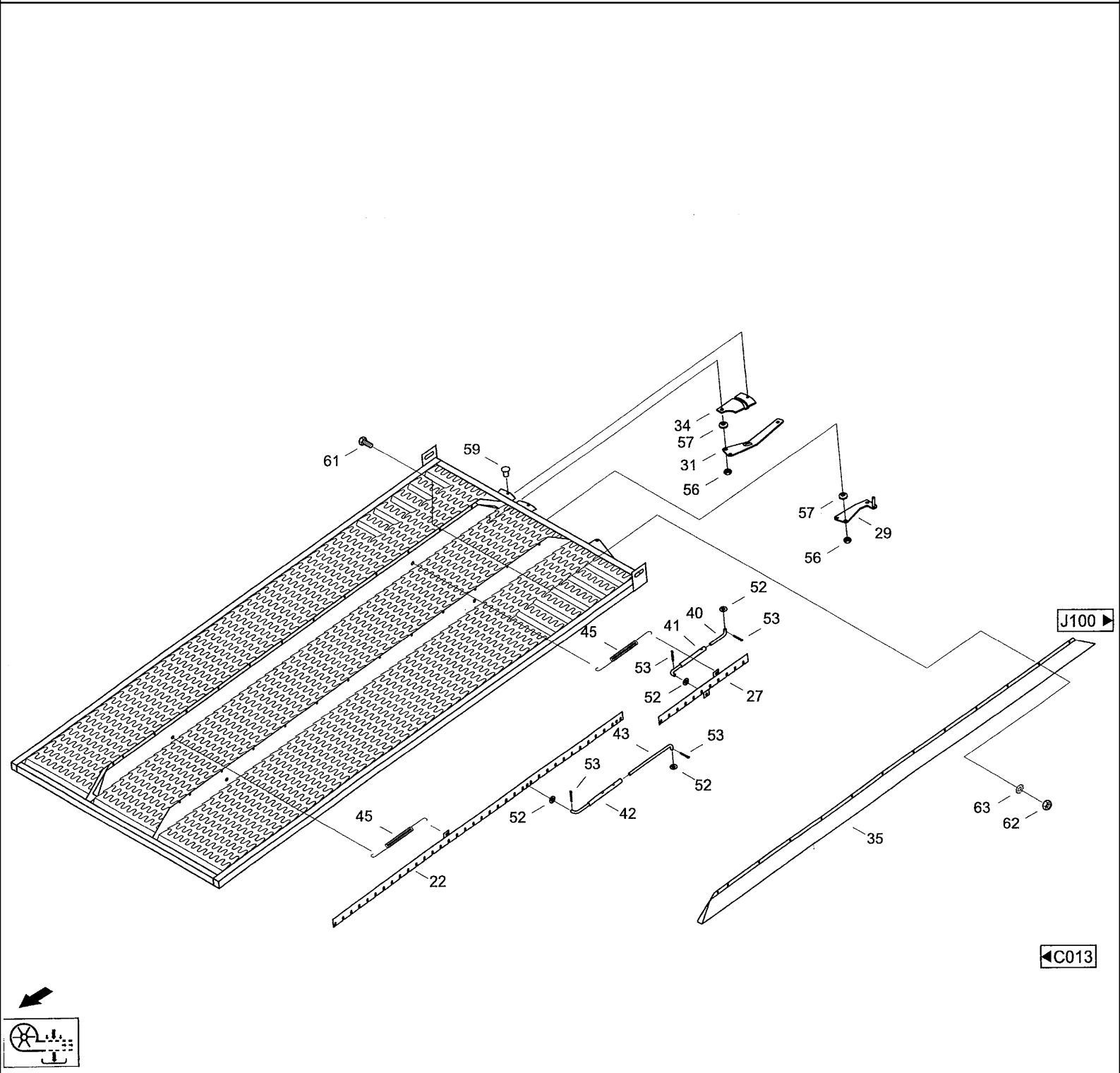

CF80 CASE IH CROSS FLOW COMBINE

C030(01) CLEANING- FLAP SIEVE

Ref	Part Number	Qty	Description
22	061070214	1	SLIDER, Slide valve
27	021008667	1	SLIDER, Slide valve
29	021015561	1	LEVER, Regulating lever LINKS
31	021015578	1	LEVER, Regulating lever r
33	021015586	1	SEGMENT, Segment LINKS
34	021015594	1	SEGMENT, Segment r
35	061070222	1	COVER, PROTECTIVE, Cover
40	021008298	1	BAR, Bar
41	021012382	1	LEVER, CONTROL, Control rod
42	021008304	1	LEVER, CONTROL, Control rod
43	021008320	1	BAR ASSY., Bar
45	021008521	2	SPRING, TENSION, Tension spring
52	895-11008	4	WASHER, M8 x 16 x 1.6, Washer 8,4 DIN125 ST
53	733-2512	4	PIN, SPLIT (COTTER), M2.5 x 12, Splint pin 2,5x12 DIN94 ST
56	832-46408	2	NUT, LOCK, M8 x 1.25, Cl 8,
57	003783751	4	SPRING, BELLEVILLE, Belleville spring A16-A3C DIN2093
59	003794553	2	RIVET, Rivet 5X10DIN660ST
61	614-4010	13	BOLT, Hex, M4 x 10, 8.8, Full Thd, Hex bolt M4x10ISO40178.8
62	825-1404	13	NUT, M4, Cl 8,
63	893-11004	13	WASHER, LOCK, Ext Tooth, M4, Toothed washer A4,3 DIN6797 FST

C030(02) CLEANING- FLAP SIEVE [CF80K]

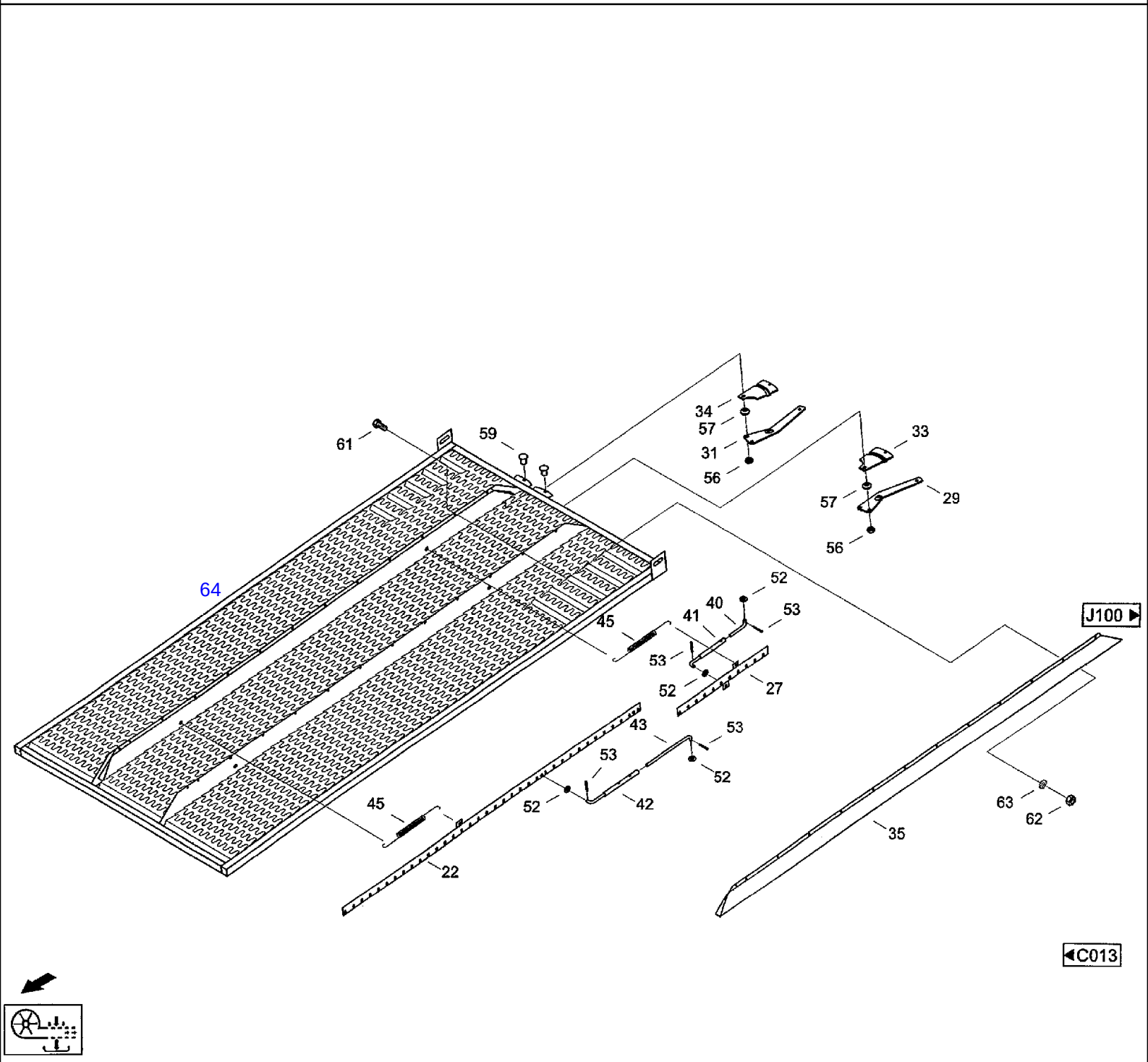

CF80 CASE IH CROSS FLOW COMBINE

C030(02) CLEANING- FLAP SIEVE [CF80K]

Ref	Part Number	Qty	Description
22	061070214	1	SLIDER, Slide valve
27	021008667	1	SLIDER, Slide valve
29	31338608	1	LEVER, Lever Os 103/73903 УСТАНОВОЧНЫЙ РЫЧАГ
31	021015578	1	LEVER, Regulating lever r 103/73903-01 УСТАНОВОЧНЫЙ РЫЧАГ
34	021015594	1	SEGMENT, Segment r
35	061070222	1	COVER, PROTECTIVE, Cover 528-51105:035 ПОКРЫТИЕ
40	021008298	1	BAR, Bar
41	021012382	1	LEVER, CONTROL, Control rod
42	021008304	1	LEVER, CONTROL, Control rod
43	021008320	1	BAR ASSY., Bar
45	021008521	2	SPRING, TENSION, Tension spring
52	895-11008	4	WASHER, M8 x 16 x 1.6, Washer 8,4DIN125ST 646082 ШАЙБА
53	733-2512	4	PIN, SPLIT (COTTER), M2.5 x 12, Splint pin 2,5x12 DIN94ST
56	832-46408	2	NUT, LOCK, M8 x 1.25, Cl 8,
57	003783751	4	SPRING, BELLEVILLE, Belleville spring A16-A3CDIN2093
59	003794553	1	RIVET, Rivet 5x10DIN660ST
61	614-4010	13	BOLT, Hex, M4 x 10, 8.8, Full Thd, Hex bolt M4x10ISO40178.8
62	825-1404	13	NUT, M4, Cl 8,
63	893-11004	13	WASHER, LOCK, Ext Tooth, M4, Toothed washer A4.3 DIN6797 FST
64		1	ВЕРХНЕЕ РЕШЕТО 528-51105:000/01

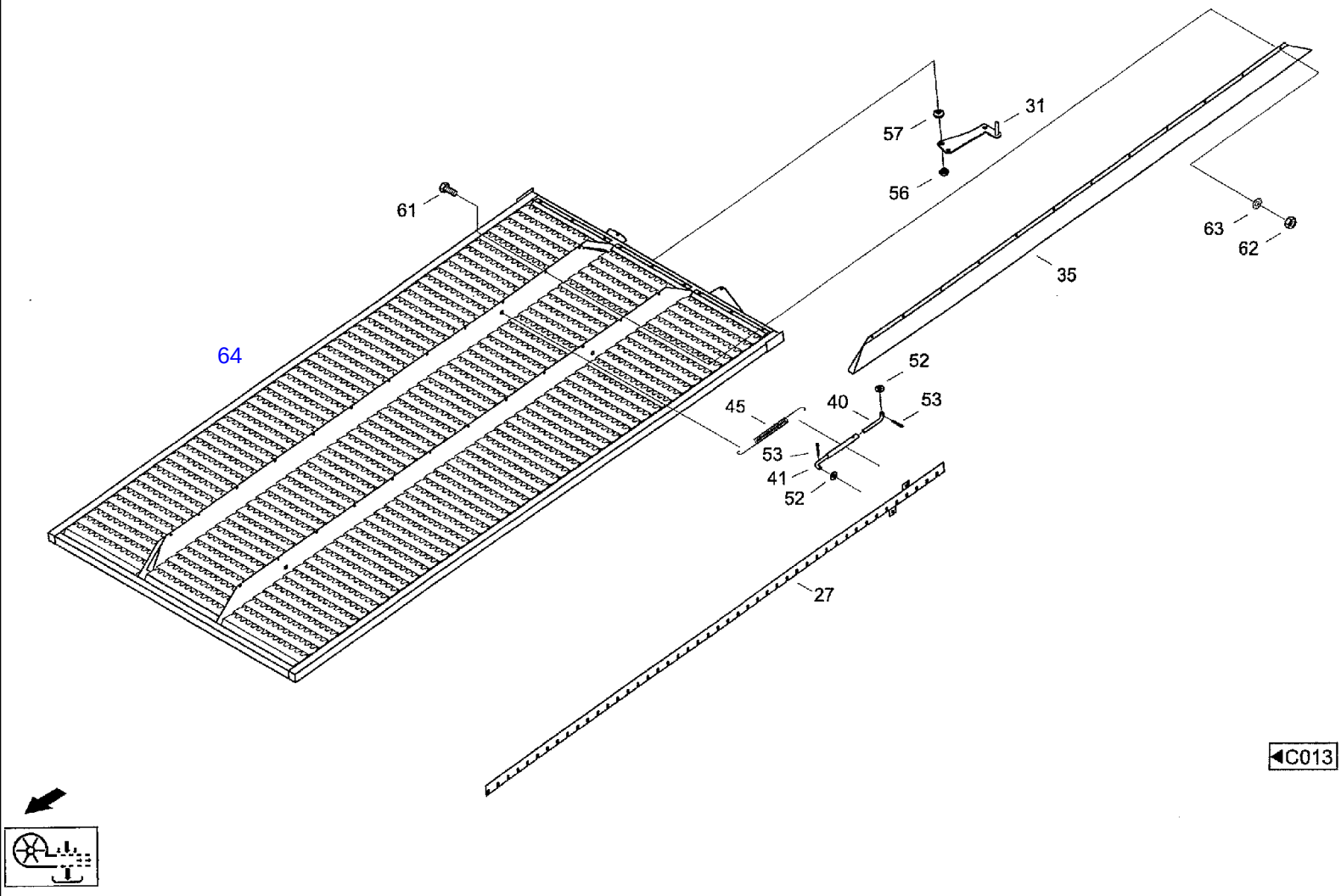
61
64
57
31
56
63
62
35
52
40
53
45
53
41
52
27
C013

CF80 CASE IH CROSS FLOW COMBINE

C040(01) CLEANING- LOWER FLAP SIEVE

Ref	Part Number	Qty	Description
27	061069960	1	SLIDER, Slide valve
31	021015578	1	LEVER, Regulating lever r 103/73903-01 УСТАНОВОЧНЫЙ РЫЧАГ
34	021015594	1	SEGMENT, Segment r
35	061069977	1	COVER, PROTECTIVE, Cover 8,4 DIN125 ST 528-51106:035 ПОКРЫТИЕ
40	021008298	1	BAR, Bar
41	021012382	1	LEVER, CONTROL, Control rod
45	021008521	1	SPRING, TENSION, Tension spring
52	895-11008	2	WASHER, M8 x 16 x 1.6, Washer 646082 ШАЙБА
53	733-2512	2	PIN, SPLIT (COTTER), M2.5 x 12, Splint pin 2,5x12 DIN94 ST
56	832-46408	1	NUT, LOCK, M8 x 1.25, Cl 8,
57	003783751	2	SPRING, BELLEVILLE, Belleville spring A16-A3C DIN2093
59	003794553	1	RIVET, Rivet 5x10 DIN660 ST
61	614-4010	13	BOLT, Hex, M4 x 10, 8.8, Full Thd, Hex bolt M4X10IS040178.8
62	825-1404	13	NUT, M4, Cl 8,
63	893-11004	13	WASHER, LOCK, Ext Tooth, M4, Toothed washer A4,3 DIN6797 FST
64		1	НИЖНЕЕ РЕШЕТО 528-51106:000/01

CF80 CASE IH CROSS FLOW COMBINE

C040(02) CLEANING- LOWER FLAP SIEVE [CF80K]

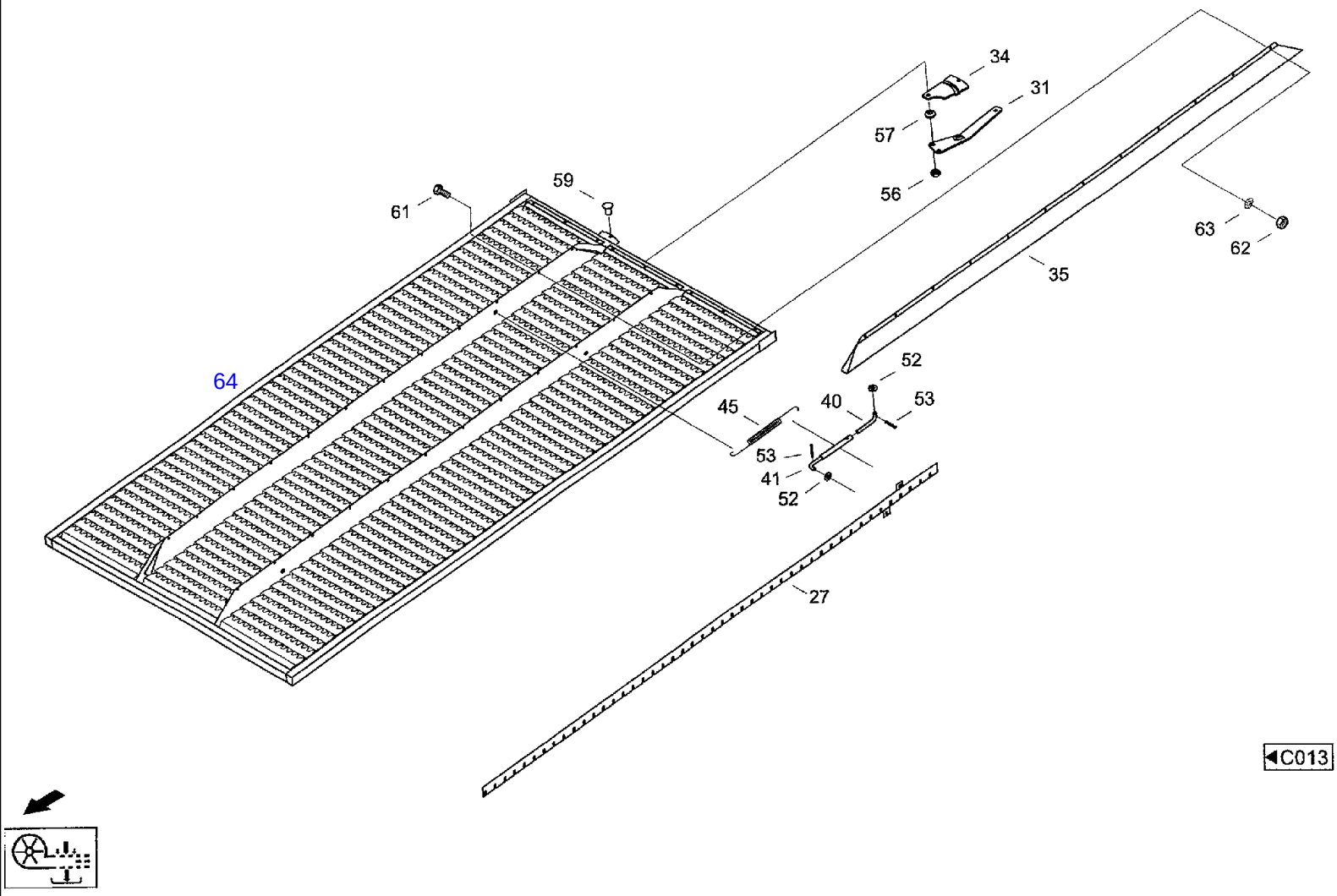

CF80 CASE IH CROSS FLOW COMBINE

C040(02) CLEANING- LOWER FLAP SIEVE [CF80K]

Ref	Part Number	Qty	Description
27	061069960	1	SLIDER, Slide valve
31	31338632	1	LEVER, Lever Us 103/73903-01 УСТАНОВОЧНЫЙ РЫЧАГ
35	061069977	1	COVER, PROTECTIVE, Cover 528-51106:035 ПОКРЫТИЕ
40	021008298	1	BAR, Bar
41	021012382	1	LEVER, CONTROL, Control rod
45	021008521	1	SPRING, TENSION, Tension spring
52	895-11008	2	WASHER, M8 x 16 x 1.6, Washer 8.4DIN125ST 646082 ШАЙБА
53	733-2512	2	PIN, SPLIT (COTTER), M2.5 x 12, Splint pin 2,5x12 DIN94ST
56	832-46408	1	NUT, LOCK, M8 x 1.25, Cl 8,
57	003783751	2	SPRING, BELLEVILLE, Belleville spring A16-A3C DIN2093
61	614-4010	13	BOLT, Hex, M4 x 10, 8.8, Full Thd, Hex bolt M4X10ISO40178.8
62	825-1404	13	NUT, M4, Cl 8,
63	893-11004	13	WASHER, LOCK, Ext Tooth, M4, Toothed washer A4,3 DIN6797 FST
64		1	НИЖНЕЕ РЕШЕТО 528-51106:000/01

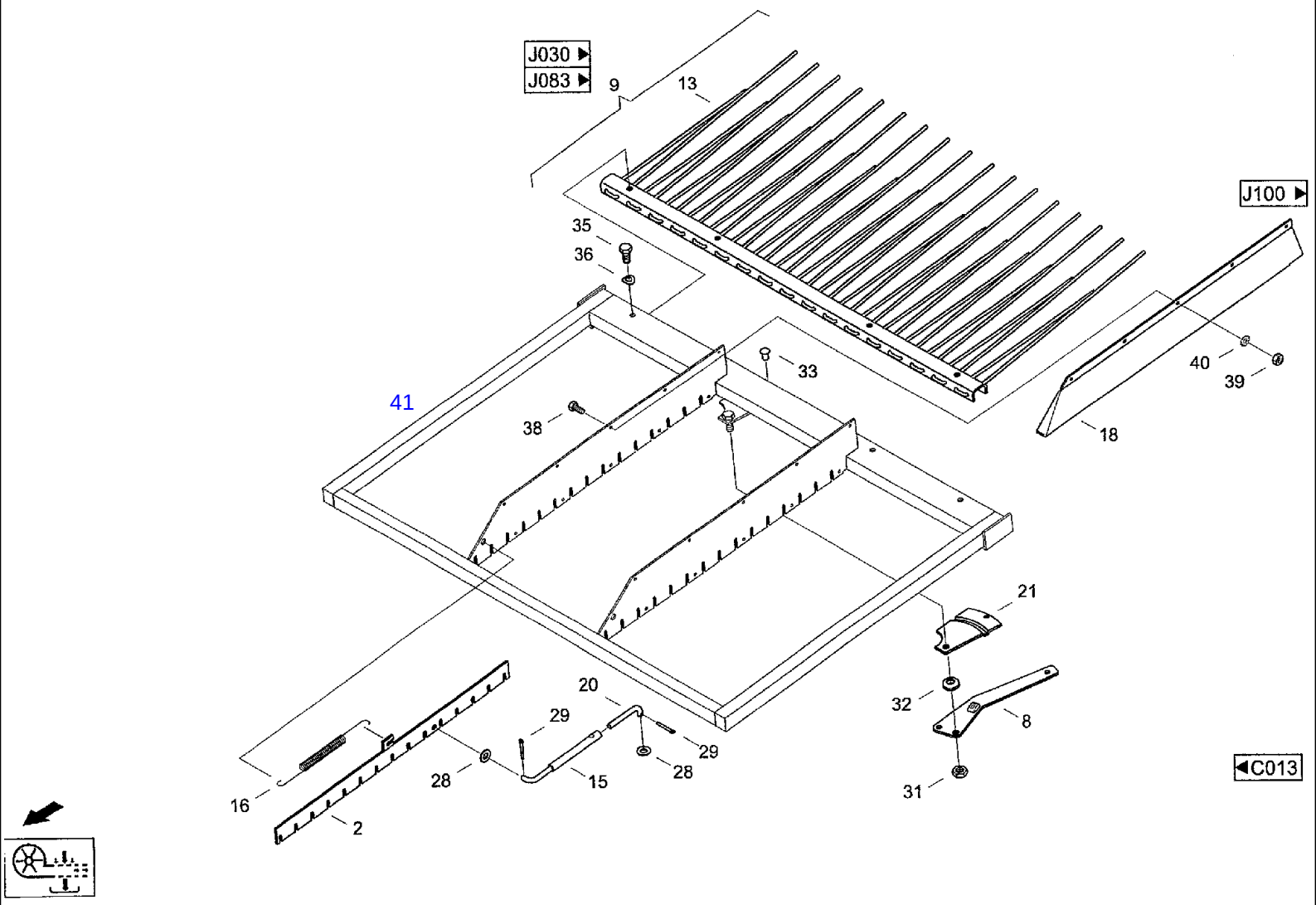
J030
J083
9
13
J100
35
36
33
40
39
41
38
18
21
20
29
32
8
29
28
28
15
31
16
2
C013

CF80 CASE IH CROSS FLOW COMBINE

C050 CLEANING- CASCADE SECTION

Ref	Part Number	Qty	Description
2	021007498	1	SPOOL, Slide valve
8	021015561	1	LEVER, Regulating lever I 103/73903 УСТАНОВОЧНЫЙ РЫЧАГ
9	061033484	1	RAKE, Rake
13	061033515	17	PRONG, Tine 527-51107:009/03 ЗУБ
15	021012382	1	LEVER, CONTROL, Control rod
16	021008521	1	SPRING, TENSION, Tension spring
18	021007545	1	COVER, PROTECTIVE, Cover 7545/7400 ПОКРЫТИЕ
20	021008298	1	BAR, Bar
21	021015586	1	SEGMENT, Segment I
28	895-11008	2	WASHER, M8 x 16 x 1.6, Washer 8.4DIN125ST 646082 ШАЙБА
29	733-2512	2	PIN, SPLIT (COTTER), M2.5 x 12, Splint pin 2,5x12 DIN94 ST
31	06116026	1	NUT, Hex nut 8 DIN980 10
32	003783751	2	SPRING, BELLEVILLE, Belleville spring A16-A3CDIN2093
33	003794553	1	RIVET, Rivet 5x10DIN660ST
35	614-6014	4	BOLT, Hex, M6 x 14, 8.8, Full Thd, Hex bolt M6x14ISO40178.8
36	06501397	4	WASHER, SPRING, Wave washer spring B6DIN137FST
38	614-4010	5	BOLT, Hex, M4 x 10, 8.8, Full Thd, Hex bolt M4x10ISO40178.8
39	825-1404	5	NUT, M4, Cl 8,
40	893-11004	5	WASHER, LOCK, Ext Tooth, M4, Toothed washer A4,3 DIN6797 FST
41		1	КАСКАДНОЕ РЕШЕТО 527-51107:000/01

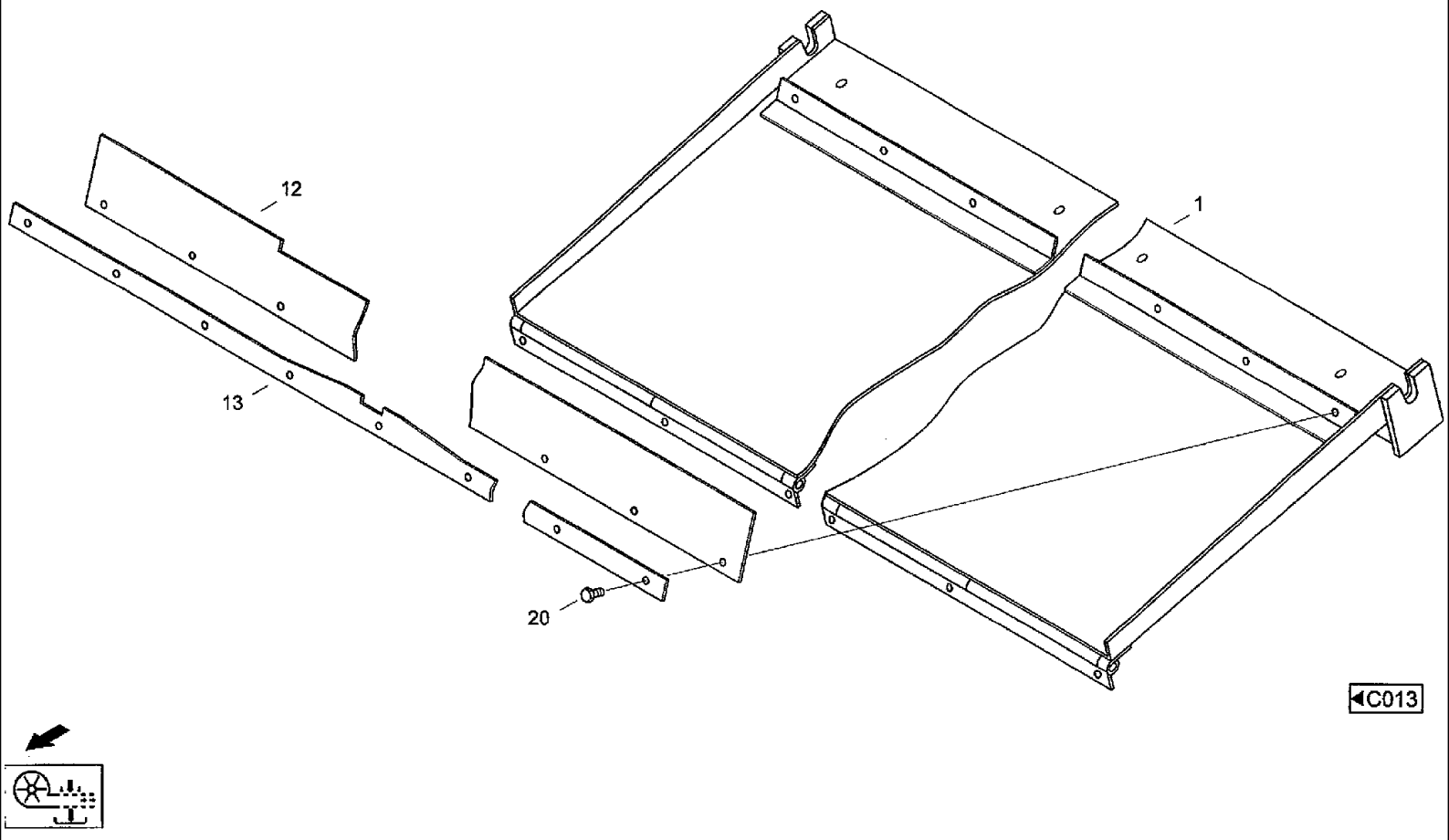
12
13
1
20
C013

CF80 CASE IH CROSS FLOW COMBINE

C060 CLEANING- DOOR

Ref	Part Number	Qty	Description		
1	31343806	1	PLATE, Rear wall	528-51113:001	ЗАДНЯЯ СТЕНКА
12	061071055	2	GASKET, Seal	528-51113:012	УПЛОТНЕНИЕ
13	31287661	2	BAR, Rail	528-51113:013	ПЛАНКА
20	614-6016	16	BOLT, Hex, M6 x 16, 8.8,		

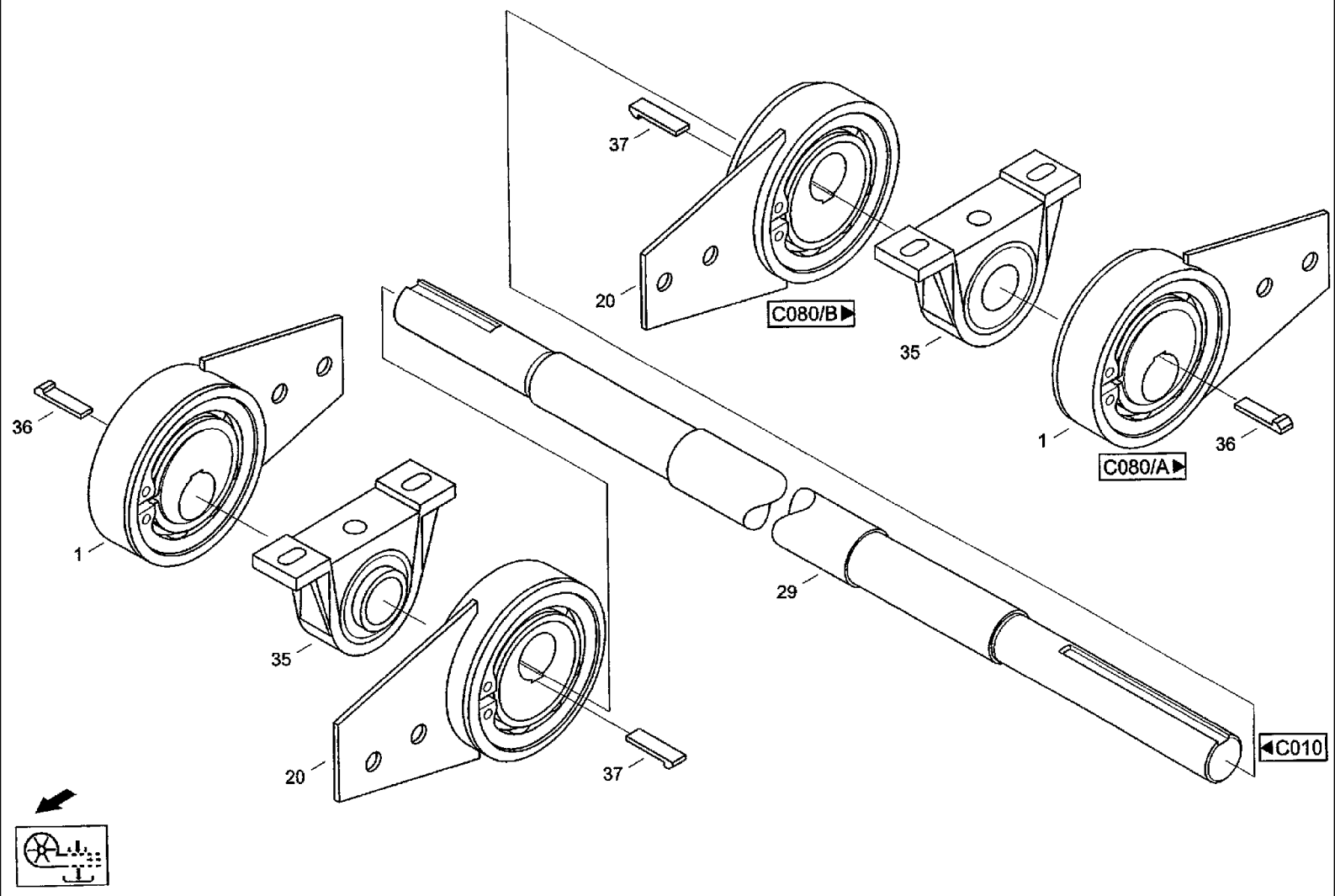
37
20
C080/B
35
1
36
C080/A
36
1
35
29
20
37
C010

CF80 CASE IH CROSS FLOW COMBINE

C070 CLEANING- DRIVE

Ref	Part Number	Qty	Description
1	061070657	2	BEARING, Lifting device 528-51108:001 ПОДШИПНИК
20	061070681	2	BEARING, Lifting device 528-51108:020 ПОДШИПНИК
29	061070632	1	SHAFT, Shaft 528-51108:029 ВАЛ
35	060518166	2	BEARING, Pedestal bearing SW40U-(SGE208)-FUSS AUSGEGO
36	003502472	2	KEY, BUCKET TOOTHRT, Gib-head key 12x8x50 DIN6887
37	060533688	2	KEY, BUCKET TOOTHRT, Gib-head key 14x9x50 DIN6887

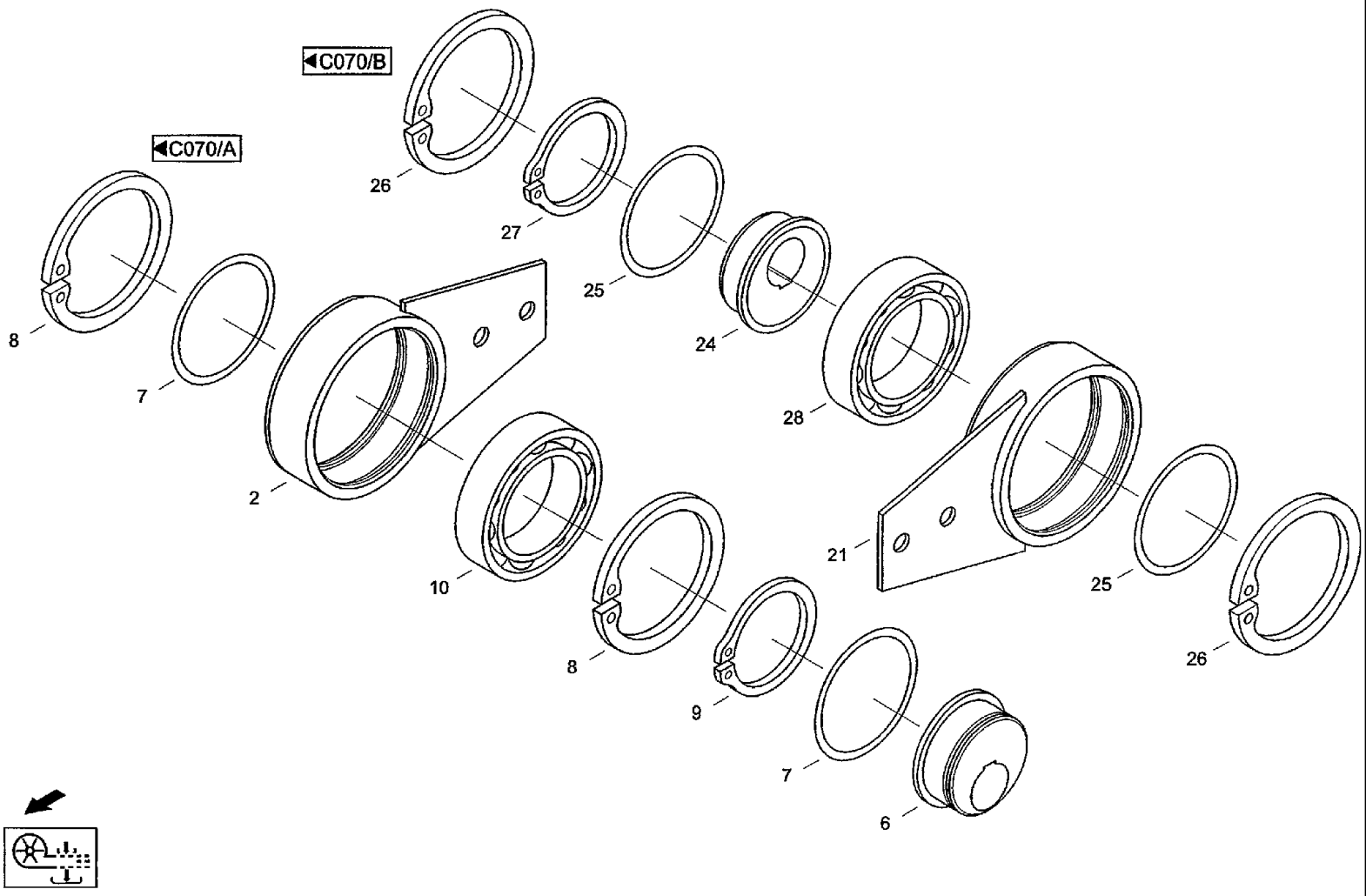
C070/B
C070/A
26
27
25
24
8
7
28
2
10
21
25
26
8
9
7
6

CF80 CASE IH CROSS FLOW COMBINE

C080 CLEANING- LIFTING DEVICE

Ref	Part Number	Qty	Description	
2	061070665	1	FRAME, Housing	528-51108:002 КОРПУС
6	072000842	1	ECCENTRIC, Eccentric	545-38003:010/03 ЭКСЦЕНТРИК
7	072000850	2	SEAL, Seal ring	545-38003:011/04 УПЛОТНИТЕЛЬНАЯ ШАЙБА
8	800-21130	2	RING, SNAP, M130, Int, Snap ring 130X4DIN472FST	
9	800-1185	1	RING, SNAP, M85, Ext, Snap ring 85x3 DIN471 FST	
10	060514017	1	BEARING, Grooved ball bearing 6017-2RSDIN625	
21	061070665	1	FRAME, Housing	528-51108:002 КОРПУС
24	061070698	1	ECCENTRIC, Eccentric	528-51108:024 ЭКСЦЕНТРИК
25	072000850	2	SEAL, Seal ring	
26	800-21130	2	RING, SNAP, M130, Int, Snap ring 1 30x4 DIN472 FST	
27	800-1185	1	RING, SNAP, M85, Ext, Snap ring 85x3 DIN471 FST	
28	060514017	1	BEARING, Grooved ball bearing 6017-2RS DIN625	

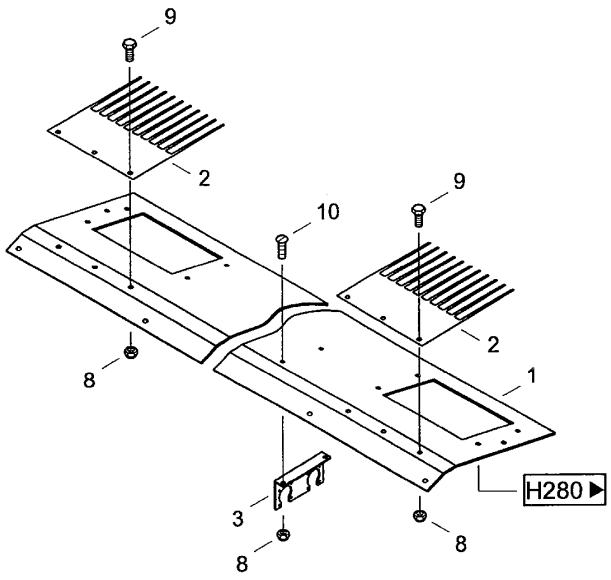

◀C010

CF80 CASE IH CROSS FLOW COMBINE

C130(01) CLEANING- STRAW OUTLET

Ref	Part Number	Qty	Description
1	31343847	1	SHEET, Panel
2	072064680	2	RAKE, Rake
8	832-10406	6	NUT, M6 x 1, Cl 8, Hex nut M6 DIN982 8
9	614-6012	6	BOLT, Hex, M6 x 12, 8.8, Hex bolt M6x12ISO40178.8

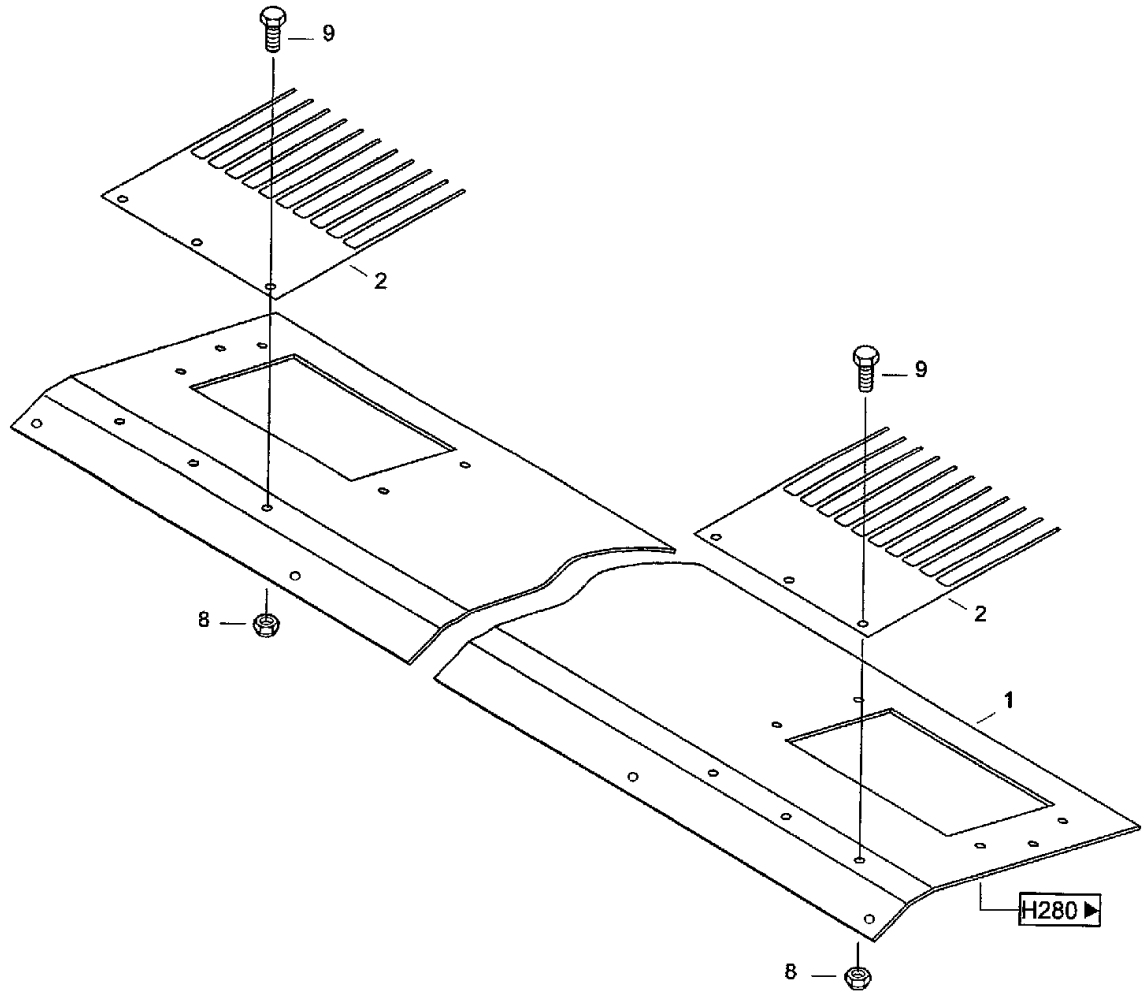

C010

CF80 CASE IH CROSS FLOW COMBINE

C130(02) CLEANING- STRAW OUTLET [CF80K]

Ref	Part Number	Qty	Description
1	31352792	1	PLATE, Panel CF80-51114:001 КРЫШКА
2	072064680	2	RAKE, Rake 545-38023:004/03 ГРАБЛИНА
3	31352300	1	PLATE, Plug plate
8	832-10406	8	NUT, M6 x 1, Cl 8, Hex nut M6 DIN982 8
9	614-6012	6	BOLT, Hex, M6 x 12, 8.8, Hex bolt M6x12 ISO40178.8
10	060512216	2	SCREW, Flat-round-head screw M6x16-A3CCN200152

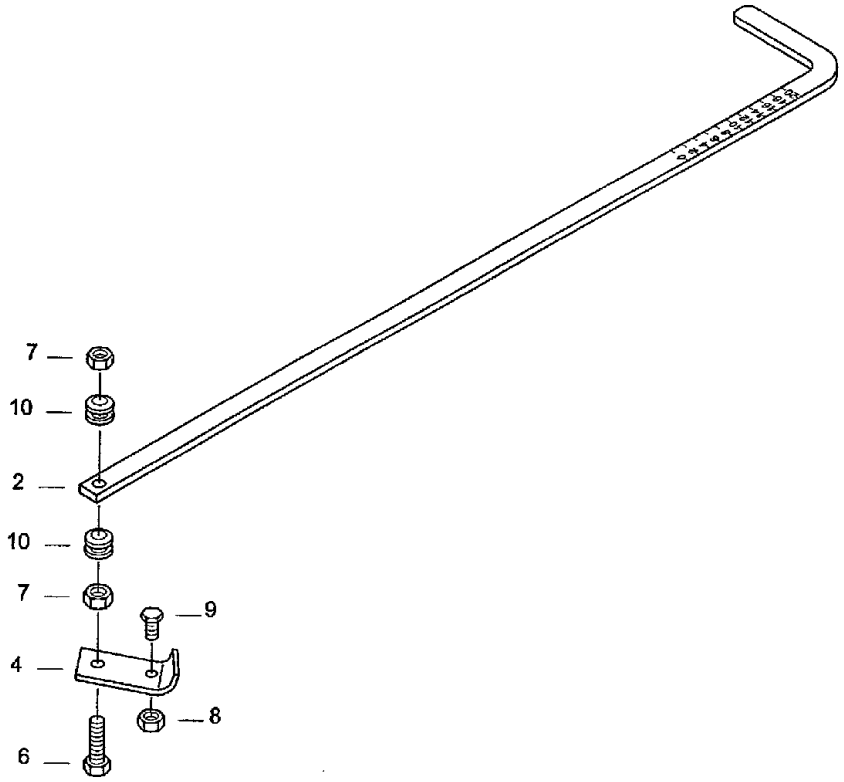

◀C010

CF80 CASE IH CROSS FLOW COMBINE

C140 CLEANING- ADJUSTING ROD

Ref	Part Number	Qty	Description
2	31287653	1	BAR ASSY., Bar 528-51116:002 СТЕРЖЕНЬ
4	060156052	1	LEVER, Lever 525-99501:001/04 РЫЧАГ
6	614-8035	1	BOLT, Hex, M8 x 35, 8.8, Hex bolt M8x35 ISO4017 8.8
7	832-46408	2	NUT, LOCK, M8 x 1.25, Cl 8,
8	832-46406	1	NUT, LOCK, M6 x 1, Cl 8,
9	614-6020	1	BOLT, Hex, M6 x 20, 8.8, Hex bolt M6x20ISO40178.8
10	003783751	4	SPRING, BELLEVILLE, Belleville spring A16-A3C DIN2093

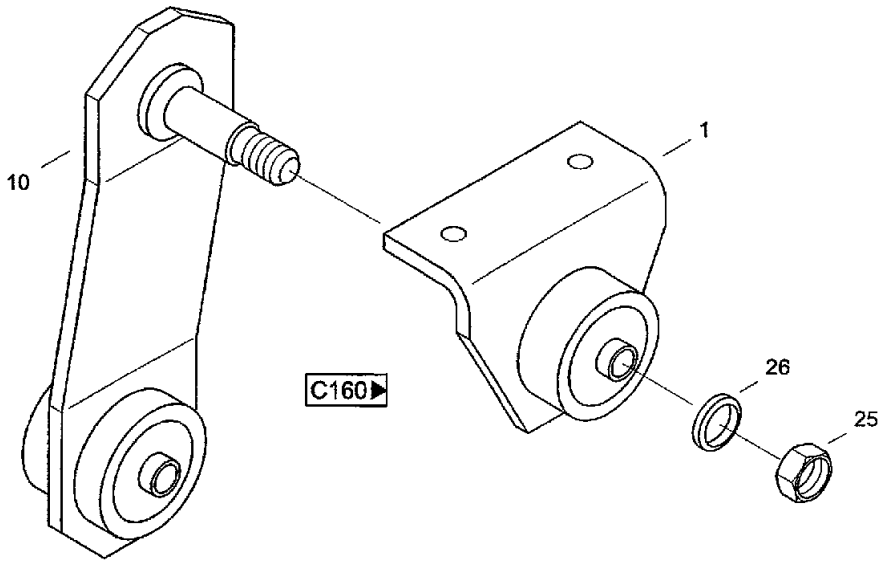

C010

CF80 CASE IH CROSS FLOW COMBINE

C150 CLEANING- ROCKER, FRONT

Ref	Part Number	Qty	Description
1	31320205	1	BEARING, Bearing 528-51119:002 ПОДШИПНИК
10	31320238	1	LEVER, Rocking lever 528-51119:011 КАЧАЮЩИЙСЯ РЫЧАГ
25	832-10420	1	NUT, M20 x 2.5, Cl 8, Hex nut M20 DIN982 8
26	06513183	1	WASHER, Washer 21 DIN6916

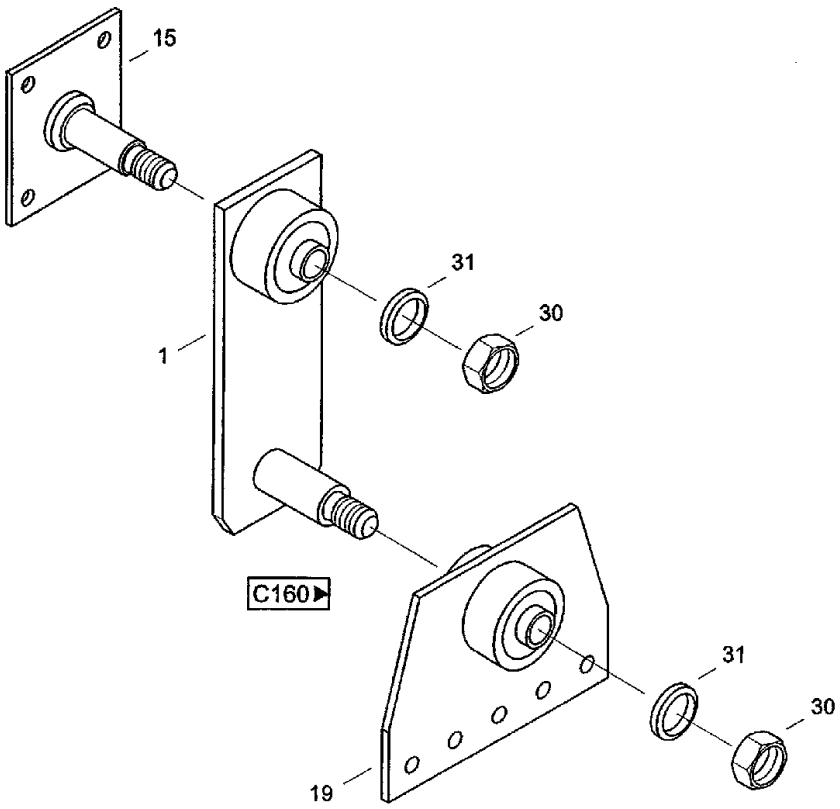

C010

CF80 CASE IH CROSS FLOW COMBINE

C155 CLEANING- ROCKER, REAR

Ref	Part Number	Qty	Description		
1	31320270	1	LEVER, Rocking lever	528-51120:002	КАЧАЮЩИЙСЯ РЫЧАГ
15	31320301	1	PLATE, LARGE, Bearing plate	528-51120:015	ОПОРНАЯ ПЛИТА
19	31320318	1	DRIVE DOG, Follower	528-51120:020	ЗАХВАТ
30	832-10420	2	NUT, M20 x 2.5, Cl 8, Hex nut M20 DIN982 8		
31	06513183	2	WASHER, Washer 21 DIN6916		

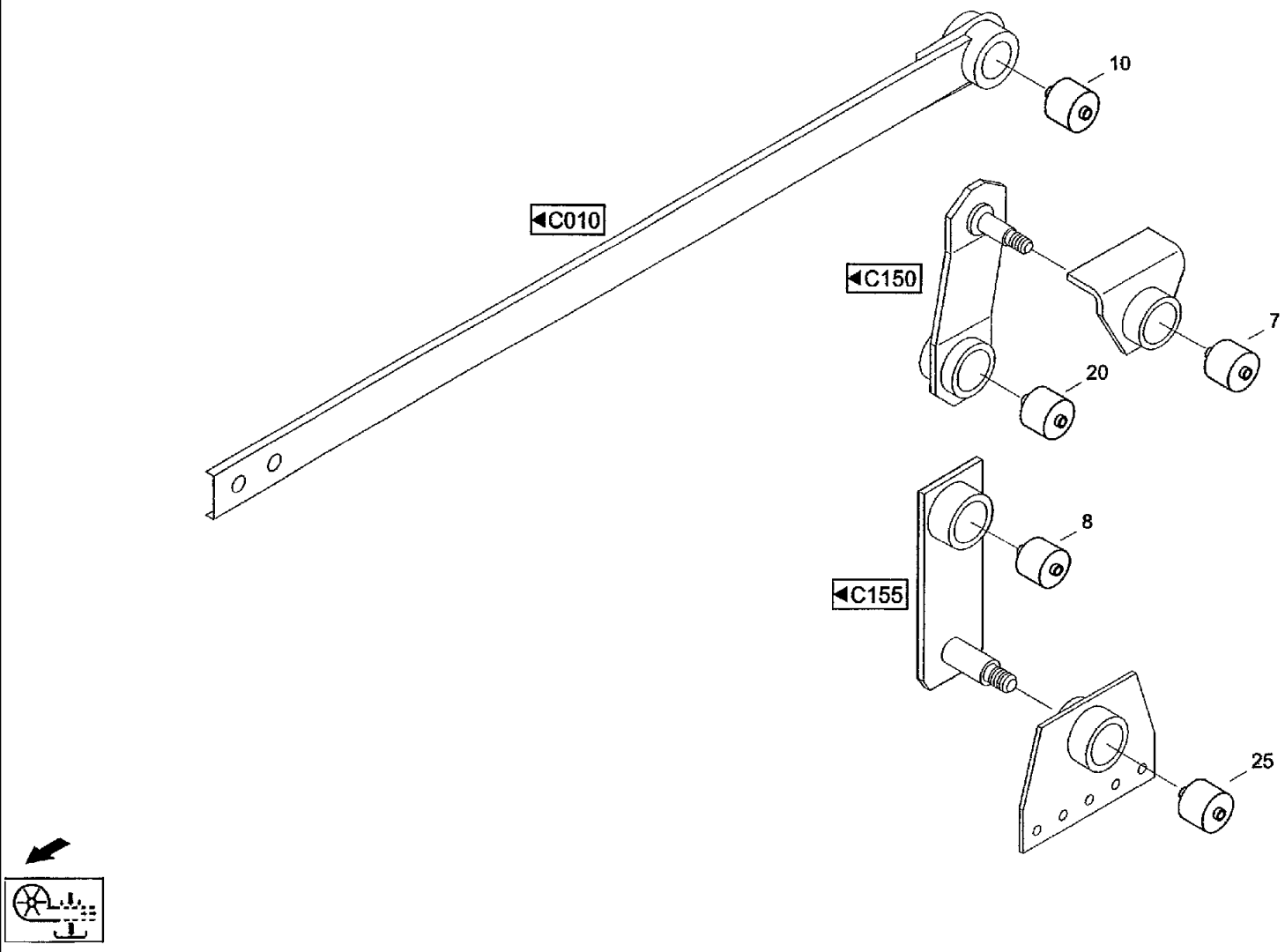
10
C010
C150
7
20
8
C155
25

CF80 CASE IH CROSS FLOW COMBINE

C160 CLEANING- ULTRA BRUSH

Ref	Part Number	Qty	Description
7	01172095	1	BUSHING, LARGE, Ultra bush ART-NR.91318
8	01172095	1	BUSHING, LARGE, Ultra bush ART-NR.91318
10	01172095	1	BUSHING, LARGE, Ultra bush ART-NR.91318
20	01172095	1	BUSHING, LARGE, Ultra bush ART-NR.91318
25	01172095	1	BUSHING, LARGE, Ultra bush ART-NR.91318

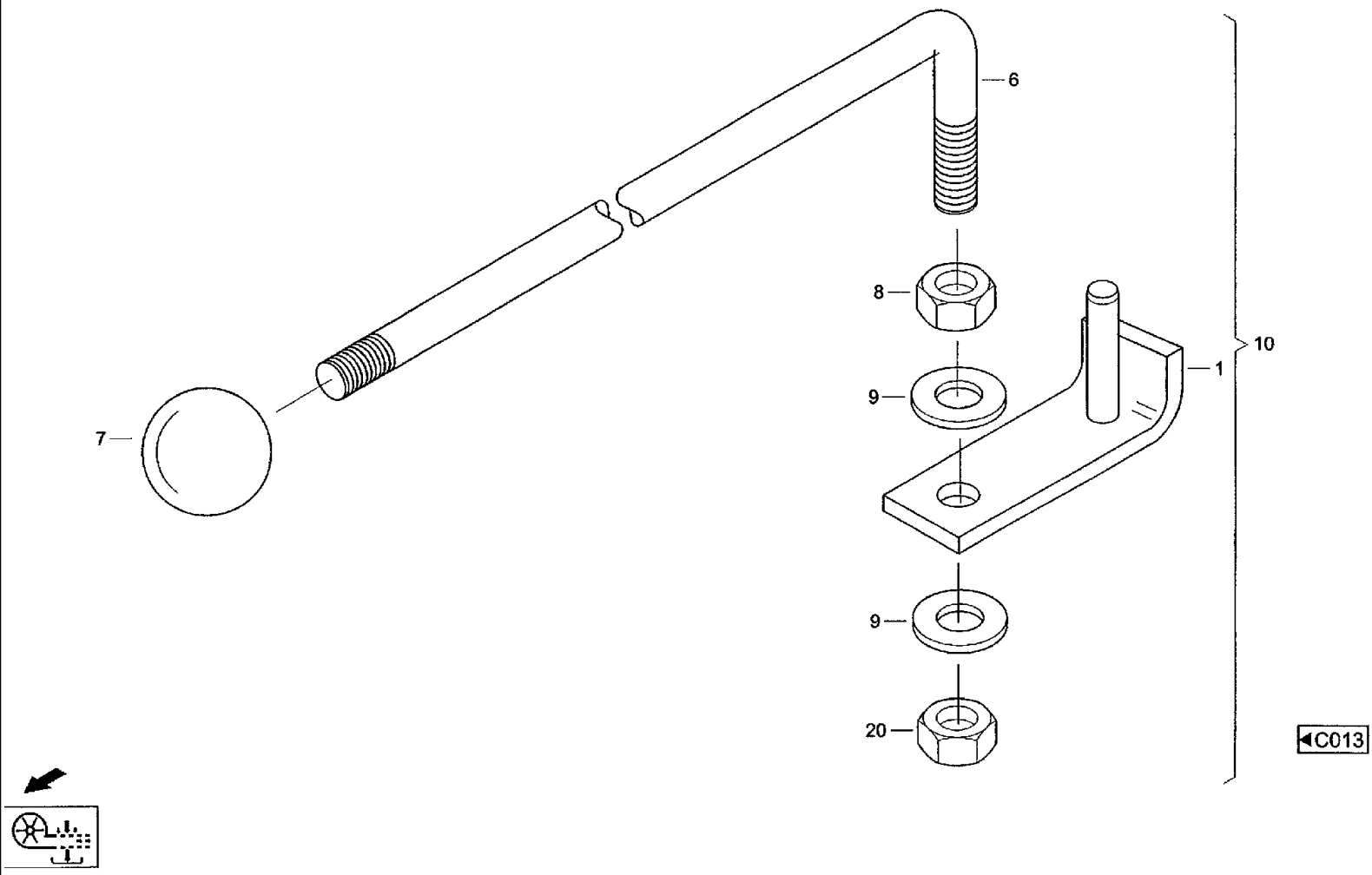
6
7
8
9
1
10
9
20
C013

CF80 CASE IH CROSS FLOW COMBINE

C165 CLEANING- FLAP SIEVE, ADJUSTER

Ref	Part Number	Qty	Description
1	060156028	1	LEVER, Lever
6	060156044	1	DRAWBAR, Drawbar
7	01322108	1	BUTTON, Ball knob DIN319-C32FS
8	825-1408	1	NUT, M8, Cl 8,
9	895-11008	2	WASHER, M8 x 16 x 1.6, Washer 8.4DIN125ST
10	060156036	1	LEVER, Adjuster Klappensieb
20	832-46408	1	NUT, LOCK, M8 x 1.25, Cl 8,

CF80 CASE IH CROSS FLOW COMBINE

C170 CLEANING- STEPPED FLOOR, VARIOUS COMPONENTS

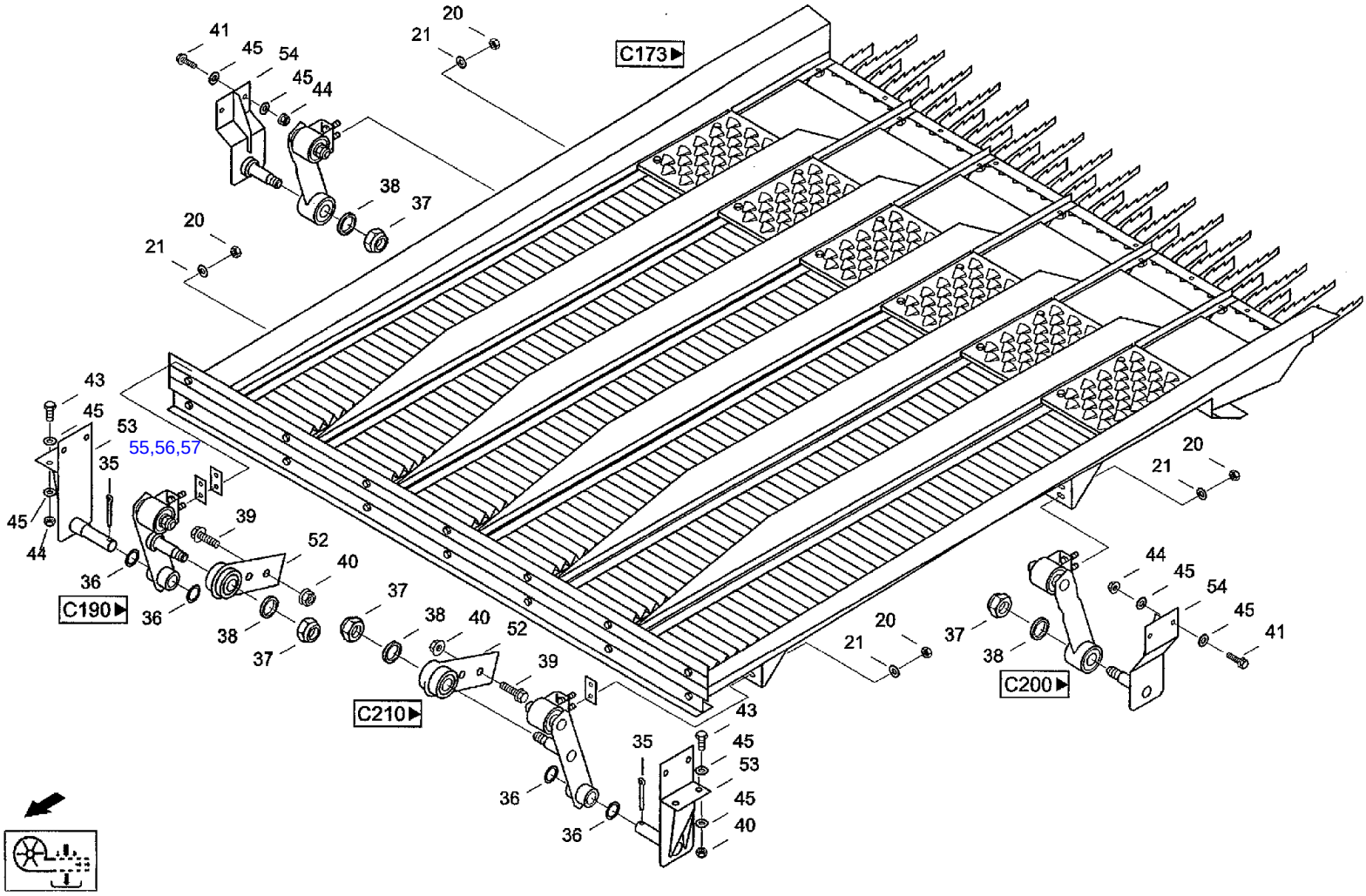

CF80 CASE IH CROSS FLOW COMBINE

C170 CLEANING- STEPPED FLOOR, VARIOUS COMPONENTS

Ref	Part Number	Qty	Description	
20	825-1410	8	NUT, M10, Cl 8,	
21	06577052	8	WASHER, SPECIAL, Locking washer B10	
35	733-6340	2	PIN, SPLIT (COTTER), M6.3 x 40, Splint pin 6,3x40 DIN94 ST	
36	06623806	8	WASHER, Shim 30x42x2 DIN988	
37	832-10420	4	NUT, M20 x 2.5, Cl 8, Hex nut M20 DIN982 8	
38	06513183	4	WASHER, Washer 21 DIN6916	
39	06070936	4	SCREW, Tensilock bolt W151.12-M16x30100	
40	060153306	4	NUT, Verbus nut W196.1-M1610	
41	627-12035	4	BOLT, Hex, M12 x 35, 10.9, Hex bolt M12x35 ISO4017 10.9	
43	627-12040	8	BOLT, Hex, M12 x 40, 10.9, Full Thd, Hex bolt M12x40 ISO4017 10.9	
44	006116091	12	NUT, Hex nut VM12 DIN980 10	
45	06577060	24	WASHER, Locking washer B12	
52	31321712	2	PLATE, PIVOT, Pushrod	
53	31321745	2	PLATE, PIVOT, Suspension V	C017-04.00.000 ПОДВЕСКА
54	31321778	2	PLATE, PIVOT, Suspension h	C017-06.00.000 ПОДВЕСКА
55		4	ПРОКЛАДКА	C017-00.00.001
56		4	ПРОКЛАДКА	C017-00.00.001-01
57		4	ПРОКЛАДКА	C017-00.00.001-02

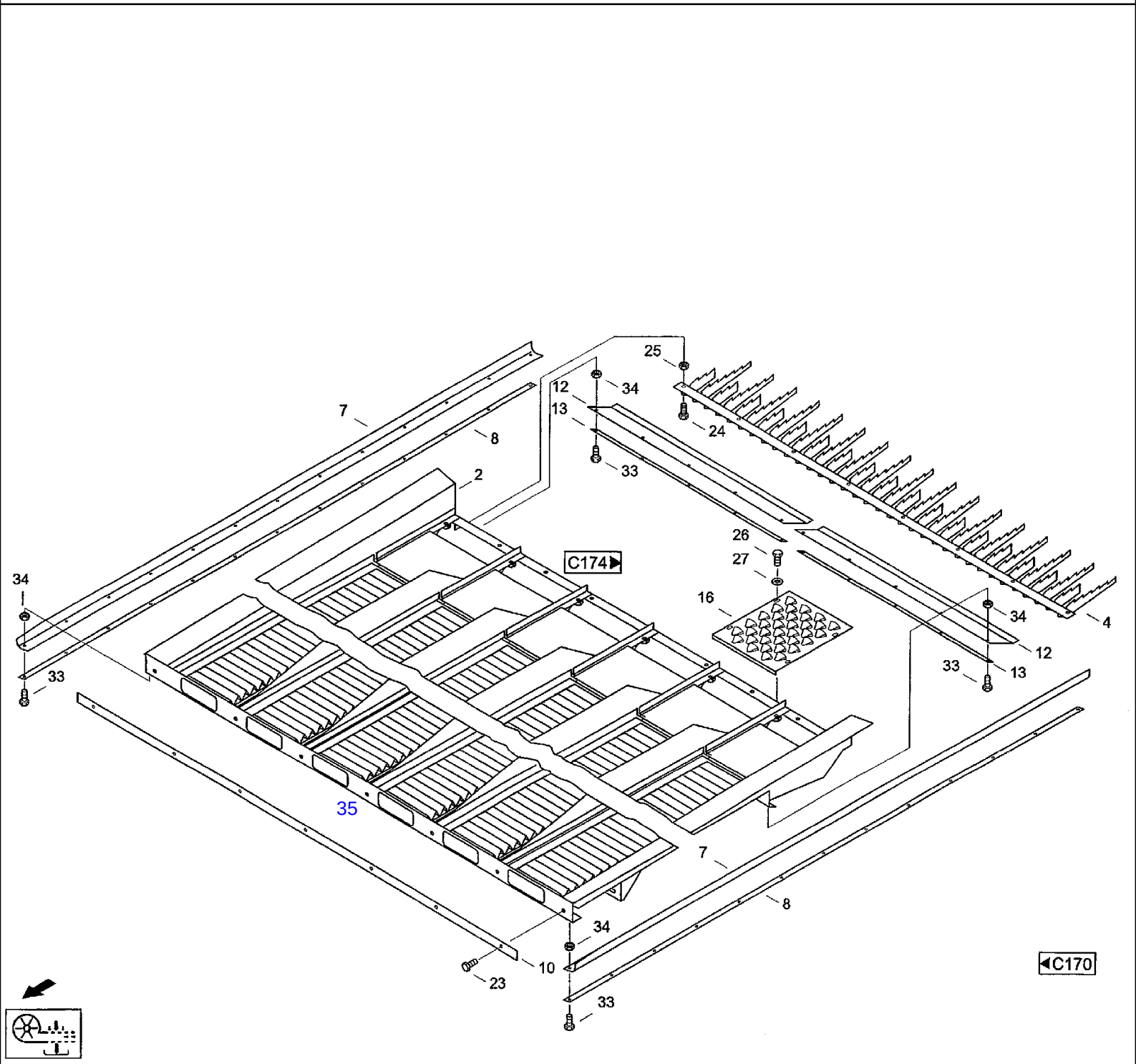
25
12
34
13
24
33
7
8
2
26
27
C174
16
34
4
12
13
33
34
33
35
7
8
34
10
23
33
C170

CF80 CASE IH CROSS FLOW COMBINE

C173 CLEANING- STEPPED FLOOR [1]

Ref	Part Number	Qty	Description
2	31341894	1	SIEVE, GRAIN, Stepped floor C017-01.01.000 ТРАНСПОРТНАЯ ДОСКА
4	021007988	1	RAKE, Rake C017-01.02.000 ГРАБЛИНА
7	061009820	2	GASKET, Seal C017-01.00.005 УПЛОТНЕНИЕ
8	061009837	2	RAIL, Rail C017-01.00.006 ПЛАНКА
10	061070046	1	RAIL, Rail C017-01.00.002 ПЛАНКА
12	061009853	2	GASKET, Seal C017-01.00.003 УПЛОТНЕНИЕ
13	061009861	2	RAIL, Rail C017-01.00.004 ПЛАНКА
16	061020422	6	SCREEN, Screen C017-01.00.007 РЕШЕТКА
23	614-8020	8	BOLT, Hex, M8 x 20, 8.8, Hex bolt M8X20IS040178.8
24	614-8025	7	BOLT, Hex, M8 x 25, 8.8,
25	832-10408	8	NUT, M8 x 1.25, Cl 8, Hex nut M8 DIN982 8
26	614-6016	24	BOLT, Hex, M6 x 16, 8.8,
27	06577036	24	WASHER, SPECIAL, Locking washer M6
33	614-4016	36	BOLT, Hex, M4 x 16, 8.8, Full Thd,
34	006267136	36	NUT, Hex nut M4 DIN985 8
35		1	УПЛОТНЕНИЕ C017-01.00.001

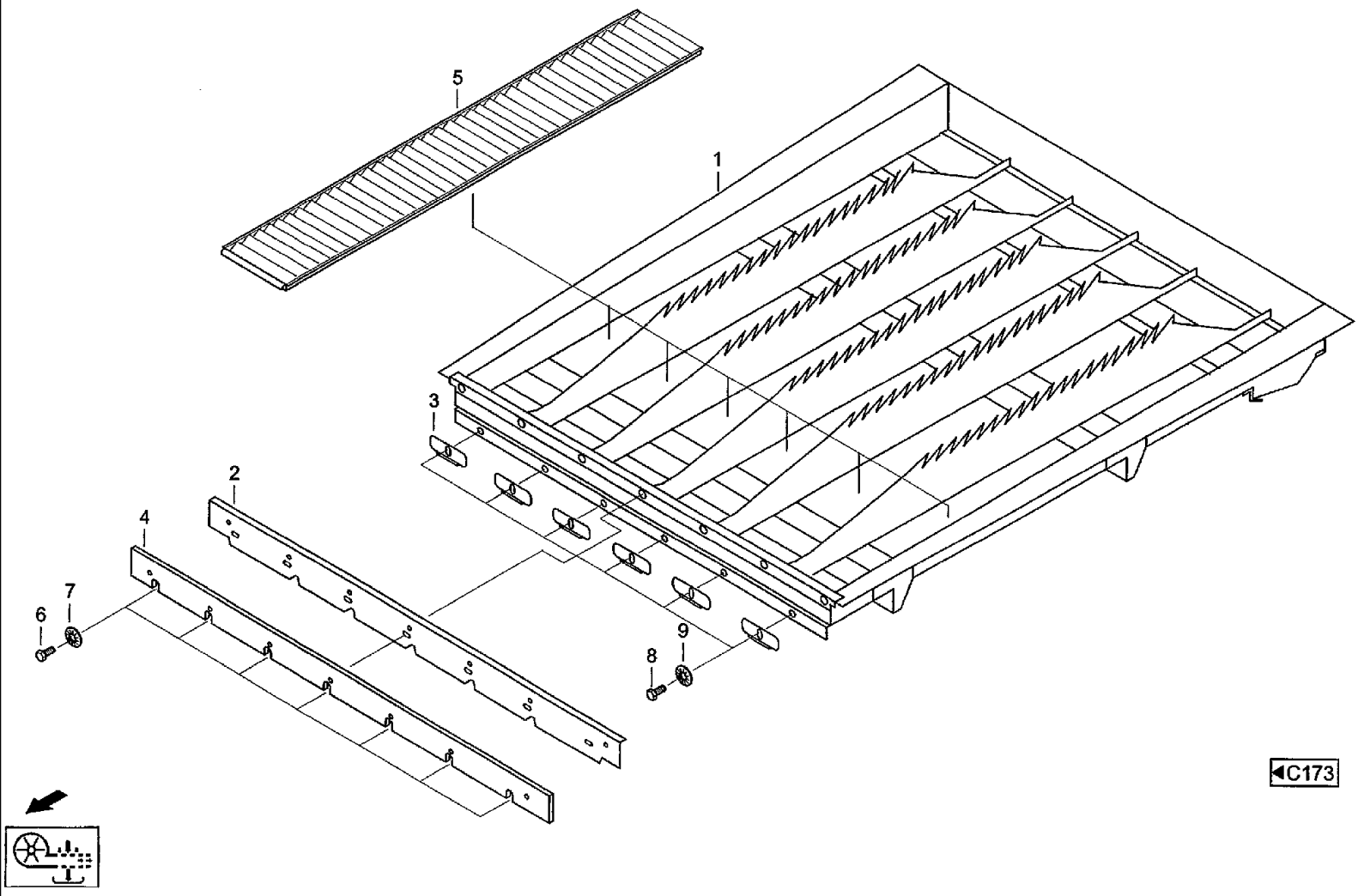
5
1
3
2
4
6
7
9
8
C173

CF80 CASE IH CROSS FLOW COMBINE

C174 CLEANING- STEPPED FLOOR [2]

Ref	Part Number	Qty	Description
1	31341900	1	FRAME, Stepped bottom frame
2	31341917	1	WALL, Front wall
3	31341925	6	FIXING BRACKET, Jam washer
4	31341933	1	GASKET, Seal
5	31341941	6	SEGMENT, Stepped segment
6	614-8025	7	BOLT, Hex, M8 x 25, 8.8,
7	06577044	7	WASHER, SPECIAL, Locking washer B8
8	614-6020	6	BOLT, Hex, M6 x 20, 8.8, Hex bolt M6x20ISO40178.8
9	06577124	6	WASHER, Locking washer B6

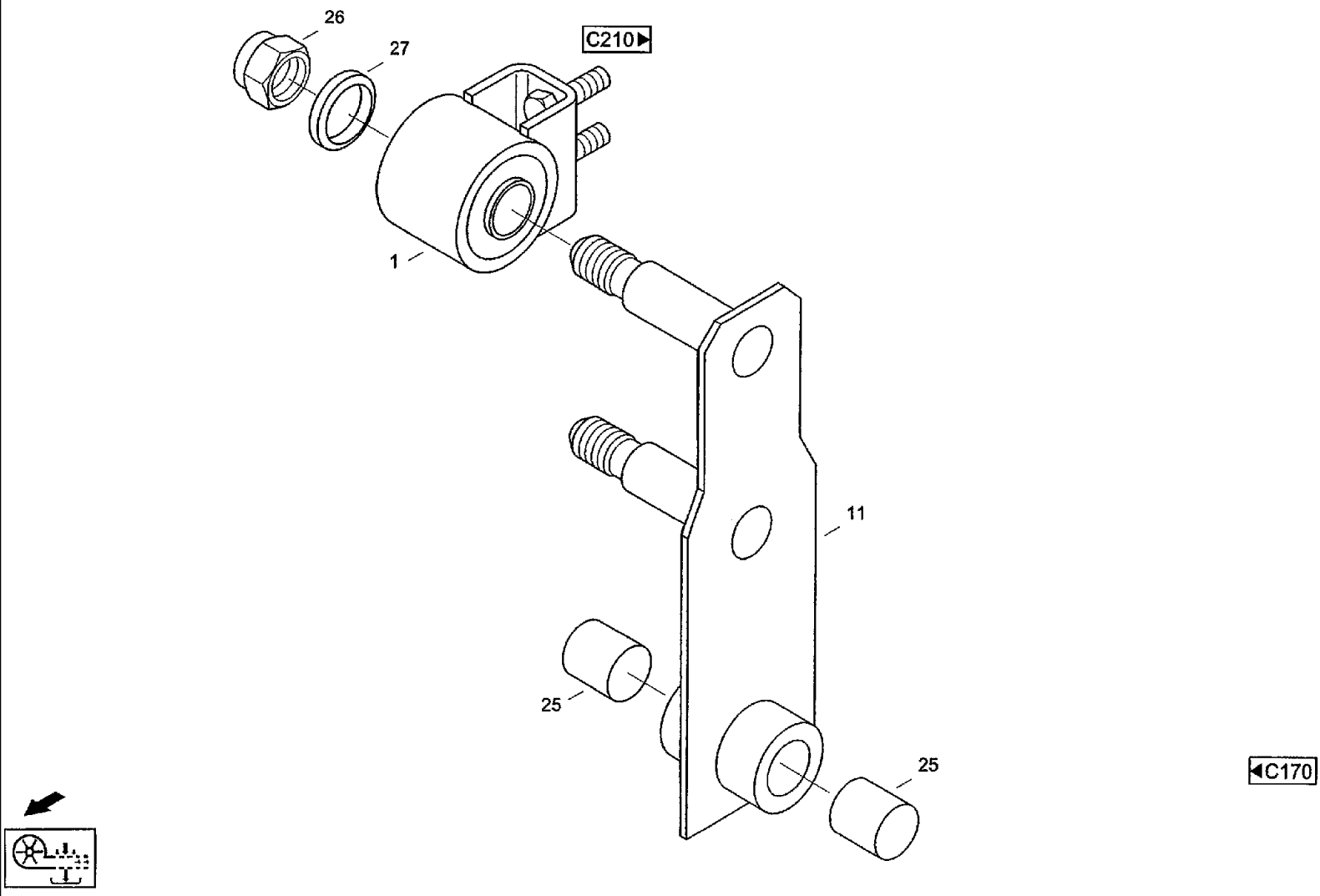
26
27
C210
1
11
25
25
C170

CF80 CASE IH CROSS FLOW COMBINE

C190 CLEANING- ROCKER, FRONT

Ref	Part Number	Qty	Description
1	31321616	1	CARRIER, BEARING, Bearing
11	31321624	1	LEVER ASSY., Lever C017-03.01.100 РЫЧАГ
25	01338412	2	BEARING, Bushing GSM-3034-30
26	832-10420	1	NUT, M20 x 2.5, Cl 8, Hex nut M20 DIN982 8
27	06513183	1	WASHER, Washer 21 DIN6916

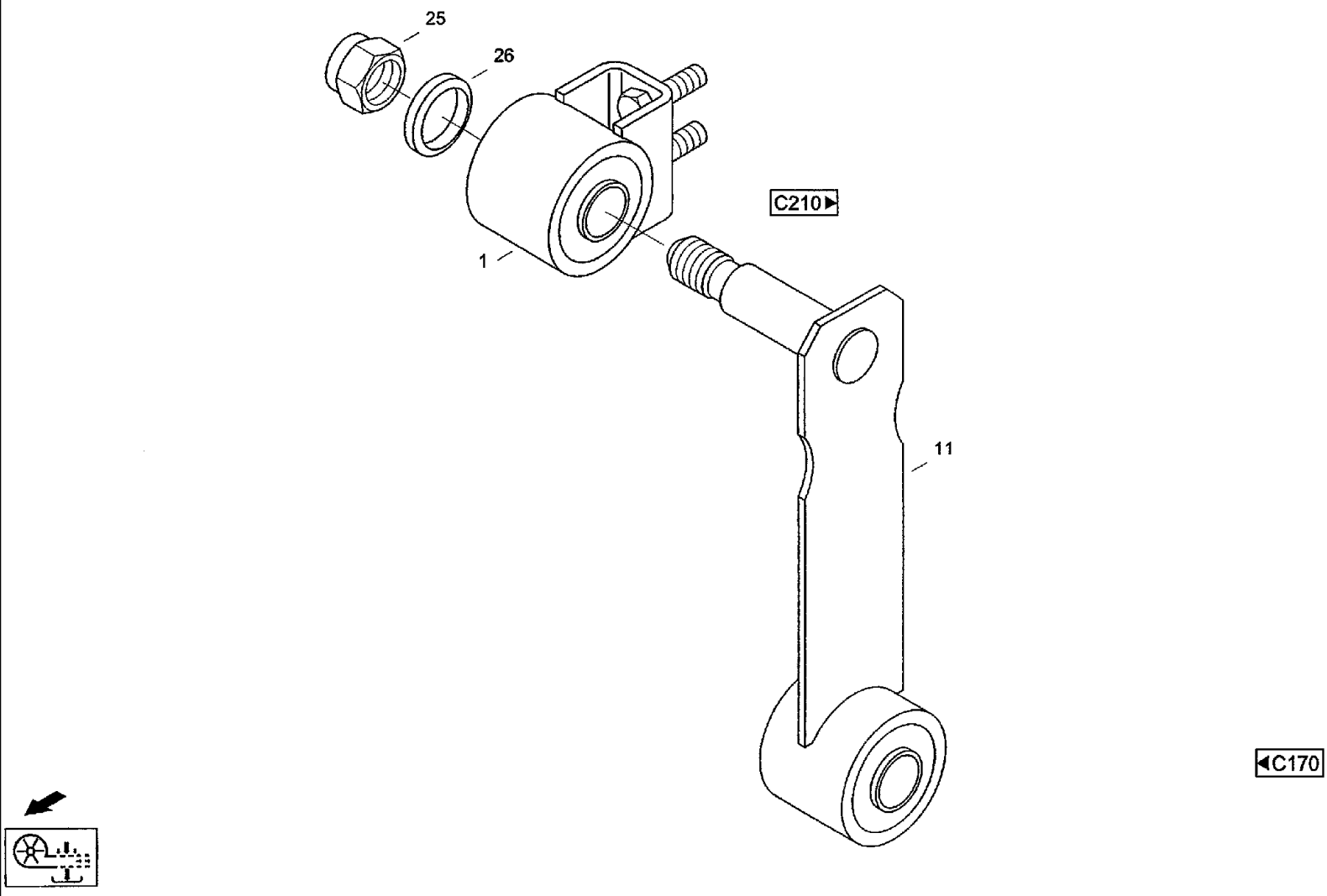
25
26
C210
1
11
C170

CF80 CASE IH CROSS FLOW COMBINE

C200 CLEANING- ROCKER, REAR

Ref	Part Number	Qty	Description
1	31321616	1	CARRIER, BEARING, Bearing
11	31321681	1	LEVER, Rocking lever
25	832-10420	1	NUT, M20 x 2.5, Cl 8, Hex nut M20 DIN982 8
26	06513183	1	WASHER, Washer 21 DIN6916

C017-05.01.100 РЫЧАГ

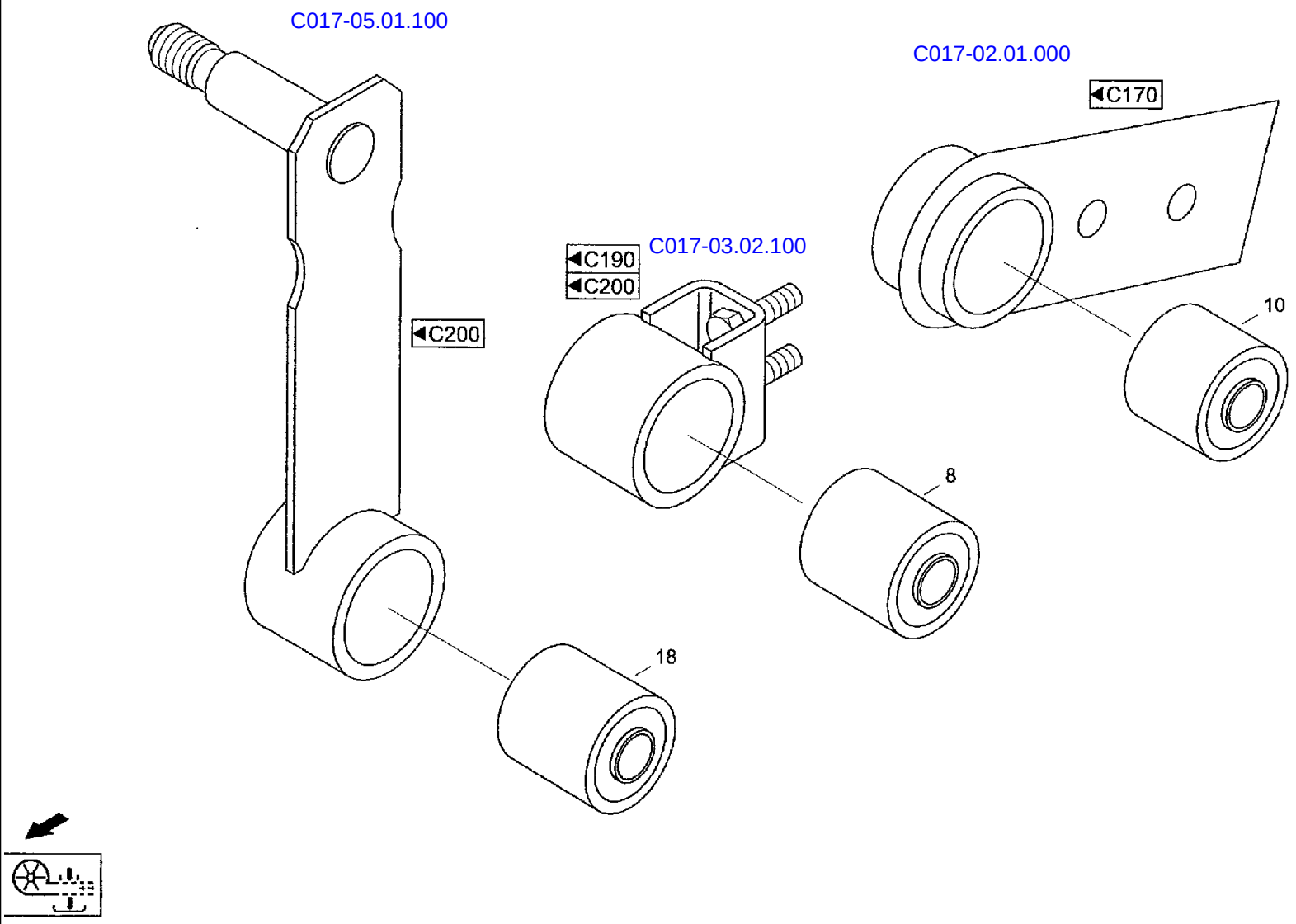
C017-05.01.100
C017-02.01.000
C170
C190
C200
C017-03.02.100
C200
10
8
18

CF80 CASE IH CROSS FLOW COMBINE

C210 CLEANING- ULTRA BUSH

Ref	Part Number	Qty	Description
8	01172095	2	BUSHING, LARGE, Ultra bush ART-NR.91318
10	01172095	1	BUSHING, LARGE, Ultra bush ART-NR.91318
18	01172095	1	BUSHING, LARGE, Ultra bush ART-NR.91318

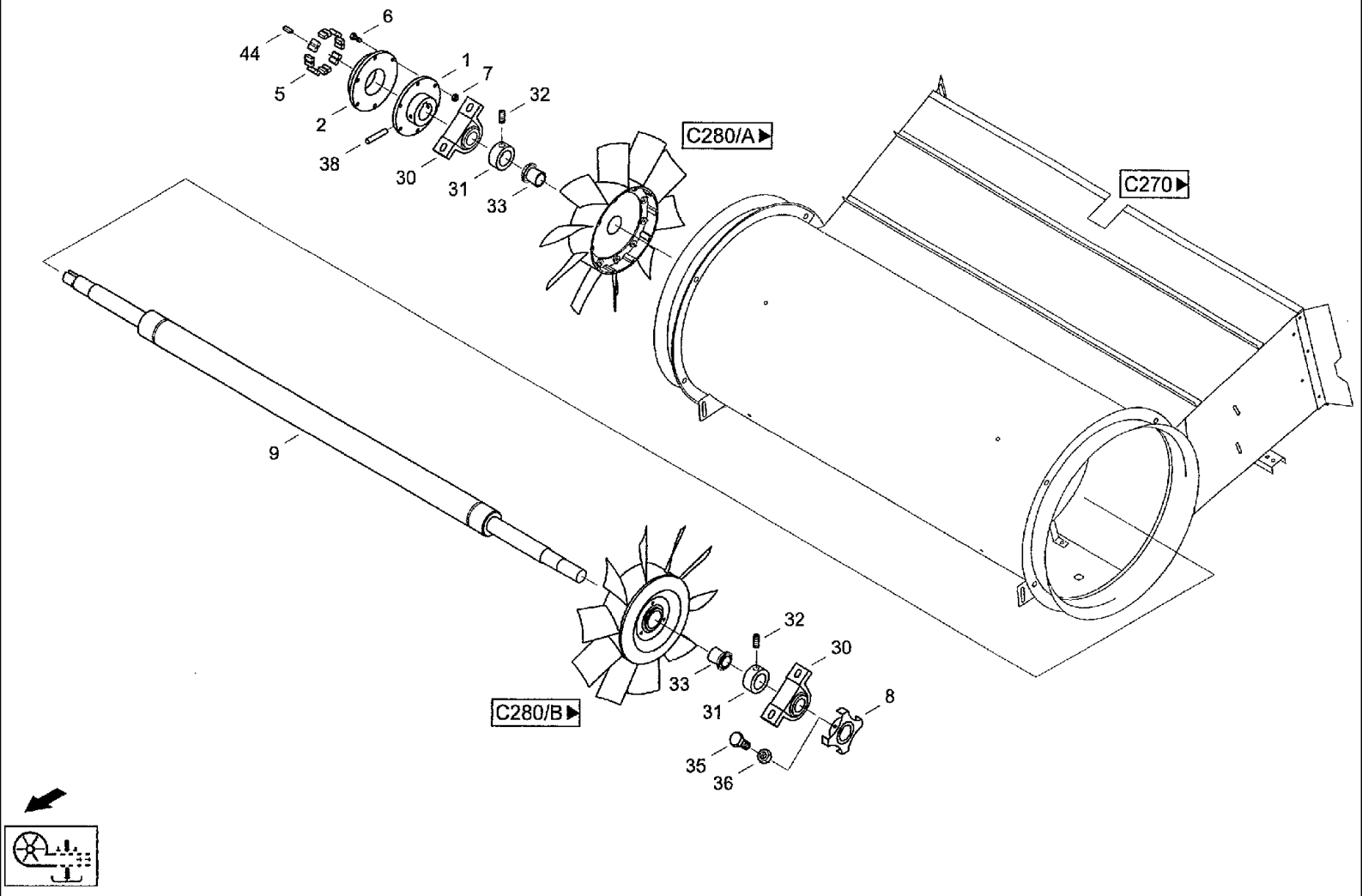
44
6
5
1
7
2
32
38
30
31
33
C280/A▶
C270▶
9
32
33
30
31
8
35
36
C280/B▶

CF80 CASE IH CROSS FLOW COMBINE

C260(01) CLEANING- FAN

Ref	Part Number	Qty	Description
1	31285803	1	DRIVE DOG, Follower C026-03.00.000 СТУПИЦА
2	072047583	1	BUMPER, Buffer ГО00-10.65.001 ПОЛУМУФТА
4	31345100	1	FRAME, Frame C026-02.00.000 РАМКА
5	060523034	1	DAMPER, HITCH, Buffer GROSSE 95 ГО00-10.65.002 ДЕМПФЕР
6	614-6025	6	BOLT, Hex, M6 x 25, 8.8, Hex bolt M6x25ISO40178.8
7	832-10406	6	NUT, M6 x 1, Cl 8, Hex nut M6 DIN982 8
8	060045786	1	WASHER, Push disk
9	31288783	1	SHAFT, Shaft
15	31285772	2	STAY, Stay C026-00.00.001 РАСПОРКА
16	31285780	2	ANGLE BAR, Angle C026-00.00.002 УГОЛОК
30	060518166	2	BEARING, Pedestal bearing SW40U-(SGE208)-FUSS AUSGEGO
31	006160392	2	RING, LOCKING, Adjusting ring A45-A3C DIN705 OHNE GEWINDE
32	003782357	2	PIN, Threaded pin M10x12ISO402945H
33	03674224	2	SLEEVE, Tension sleeve H2310DIN5415
35	614-10025	1	BOLT, Hex, M10 x 25, 8.8, Full Thd, Hex bolt M10x25ISO40178.8
36	825-1410	1	NUT, M10, Cl 8,
38	838-5660	1	PIN, M6 x 60, Slotted, Roll pin 6x60 DIN1481 FST
40	814-12090	4	BOLT, Hex, M12 x 90, 8.8, Hex bolt M1 2x90 ISO4014 8.8
41	825-1412	4	NUT, M12, Cl 8, Hex nut M12ISO40328
42	06577011	8	PLATE, LOCKING, Locking washer M12
44	97031085	1	KEY, BUCKET TOOTHRT, Flat key A1 0x8x40 DIN6885ST
46	614-8020	4	BOLT, Hex, M8 x 20, 8.8, Hex bolt M8x20ISO40178.8
47	825-1408	4	NUT, M8, Cl 8,
48	06577028	4	WASHER, SPECIAL, Locking washer M8
49	614-10025	4	BOLT, Hex, M10 x 25, 8.8, Full Thd, Hex bolt M10x25ISO40178.8

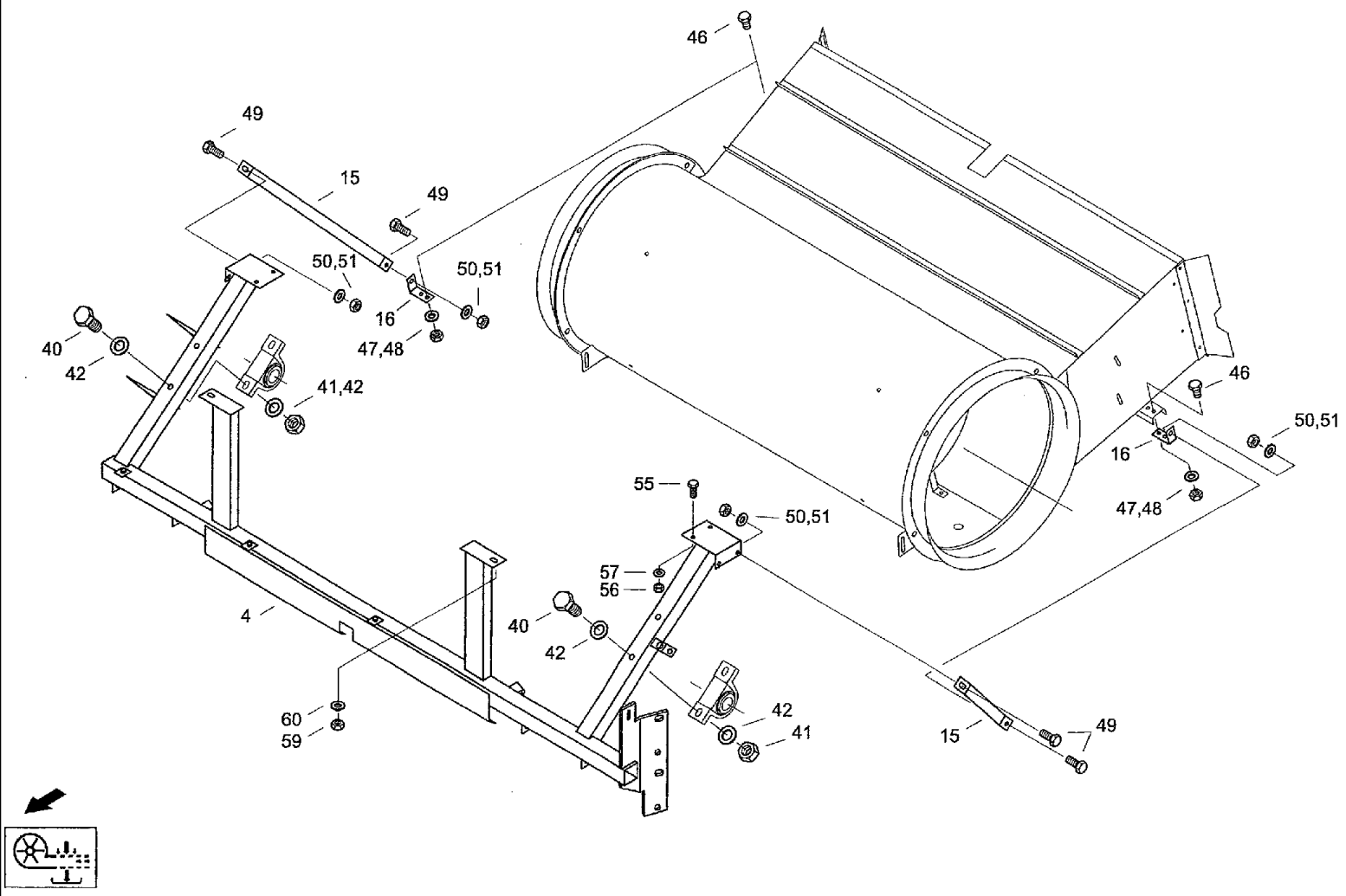
46
49
15
49
50,51
50,51
16
47,48
40
42
41,42
46
50,51
16
47,48
55
50,51
57
56
40
42
42
41
4
60
59
15
49

CF80 CASE IH CROSS FLOW COMBINE

C260(02) CLEANING- FAN

Ref	Part Number	Qty	Description
50	825-1410	4	NUT, M10, Cl 8,
51	06577052	4	WASHER, SPECIAL, Locking washer B10
55	614-10030	6	BOLT, Hex, M10 x 30, 8.8,
56	825-1410	6	NUT, M10, Cl 8,
57	06577003	8	WASHER, SPECIAL, Locking washer M10
59	825-1412	2	NUT, M12, Cl 8, Hex nut M12 ISO4032 8
60	06577011	2	PLATE, LOCKING, Locking washer M12

CF80 CASE IH CROSS FLOW COMBINE

C270 CLEANING- HOUSING

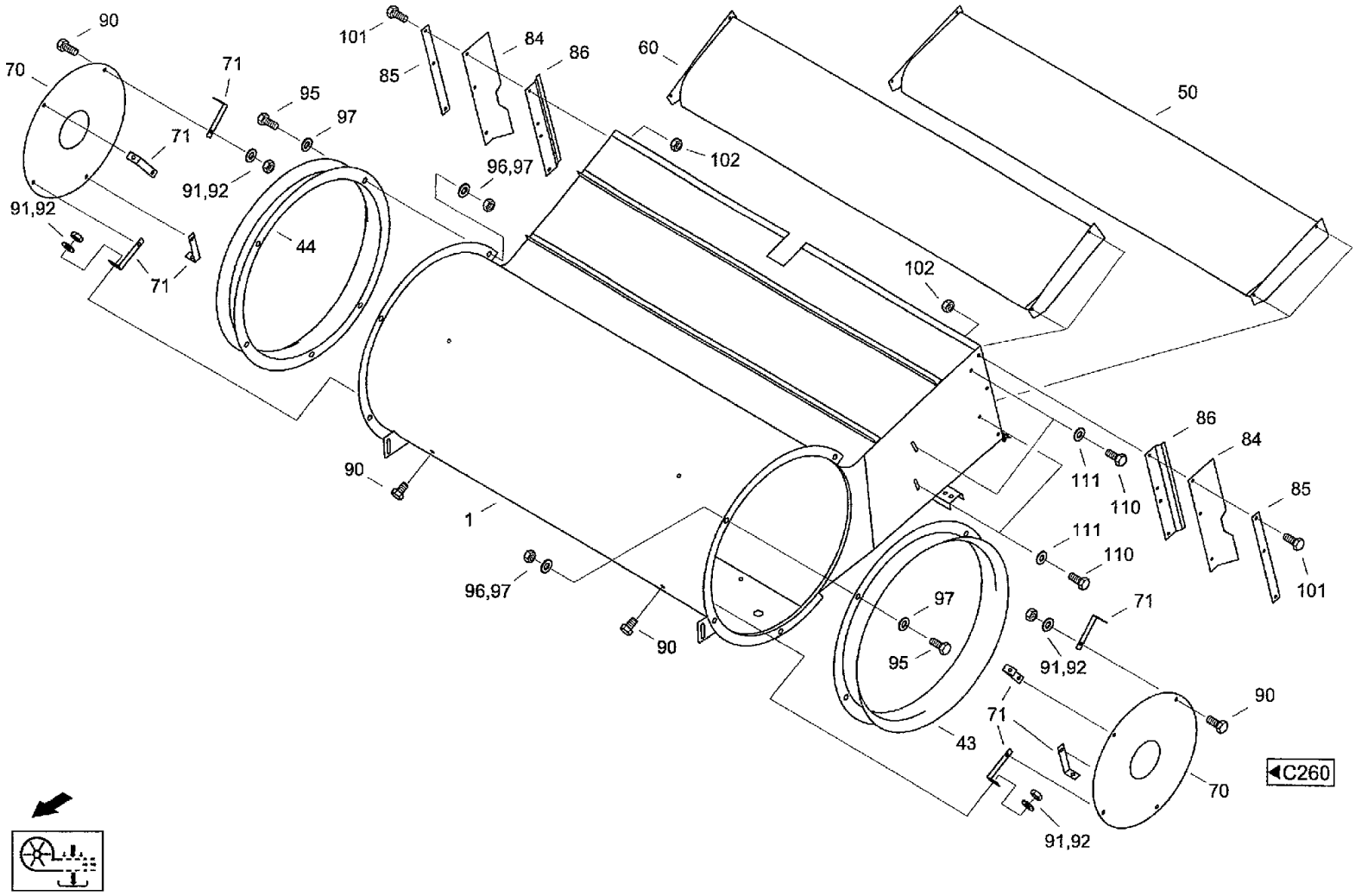

CF80 CASE IH CROSS FLOW COMBINE

C270 CLEANING- HOUSING

Ref	Part Number	Qty	Description	
1	061075573	1	HOUSING, Housing	C026-01.01.000 КОРПУС
43	060109632	1	JET, Nozzle LINKS	526-50702:038/03 СОПЛО
44	060109624	1	JET, Nozzle RECHTS	526-50702:044/03 СОПЛО
50	31285811	1	PROFILE, Flow profile u	
60	31285885	1	PROFILE, Flow profile	C026-01.02.000 РУЧЕЙНЫЙ ПРОФИЛЬ
70	31288285	2	DISC, Washer	526-50602:081/04 ШАЙБА
71	020460758	8	STAY, Stay	526-50602:082/04 ПЕРЕМЫЧКА
84	31288420	2	GASKET, Seal	C026-01.00.001 УПЛОТНЕНИЕ
85	060109987	2	RAIL, Rail	526-50702:085/04 ШИНА
86	31288478	2	ANGLE, Angle	C026-01.00.002 УГОЛОК
90	614-8016	16	BOLT, Hex, M8 x 16, 8.8,	
91	825-1408	16	NUT, M8, Cl 8,	
92	06577044	16	WASHER, SPECIAL, Locking washer B8	
95	614-8020	8	BOLT, Hex, M8 x 20, 8.8, Hex bolt M8x20ISO40178.8	
96	825-1408	8	NUT, M8, Cl 8,	
97	06577044	16	WASHER, SPECIAL, Locking washer B8	
101	614-6016	6	BOLT, Hex, M6 x 16, 8.8,	
102	832-10406	6	NUT, M6 x 1, Cl 8, Hex nut M6 DIN982 8	
110	614-6012	8	BOLT, Hex, M6 x 12, 8.8, Hex bolt M6x12ISO40178.8	
111	06577124	8	WASHER, Locking washer B6	

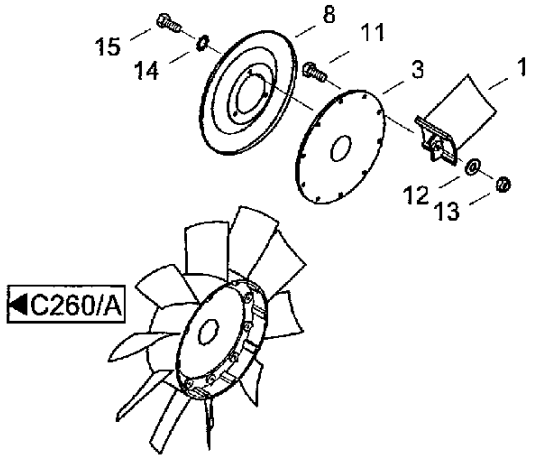
15
14
8
11
3
1
12
13
◀C260/A

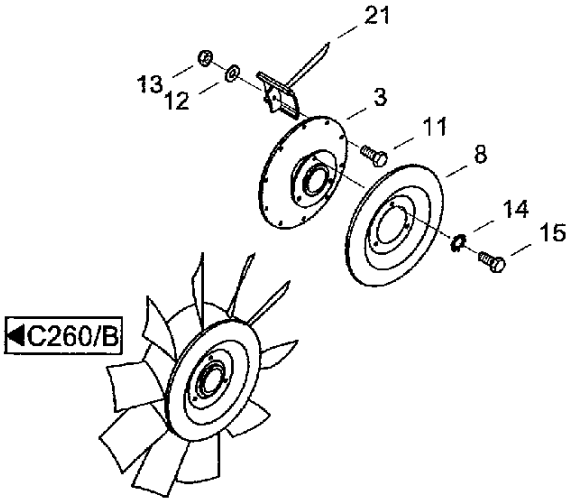
21
13
12
3
11
8
14
15
◀C260/B

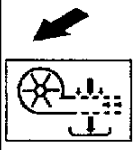

CF80 CASE IH CROSS FLOW COMBINE

C280 CLEANING- BLOWER

Ref	Part Number	Qty	Description
1	020836065	10	FIN, Vane r 302/74116
3	060110031	2	HUB, Hub 526-50705:003/03 СТУПИЦА
8	060110064	2	COVER, Cap 526-50705:008/03 КРЫШКА
11	614-6025	20	BOLT, Hex, M6 x 25, 8.8, Hex bolt M6x25ISO40178.8
12	895-25006	20	WASHER, M6 x 18 x 1.6, Washer 6,4 DIN9021
13	832-10406	20	NUT, M6 x 1, Cl 8, Hex nut M6 DIN982 8
14	893-11006	6	WASHER, Ext Tooth, M6, Toothed washer A6,4 DIN6797 FST
15	614-6012	6	BOLT, Hex, M6 x 12, 8.8, Hex bolt M6X12ISO40178.8
21	020836073	10	PADDLE, Vane l 502/74115

CF80 CASE IH CROSS FLOW COMBINE

C310 ADVANCEMENT- DISTRIBUTING SCREW

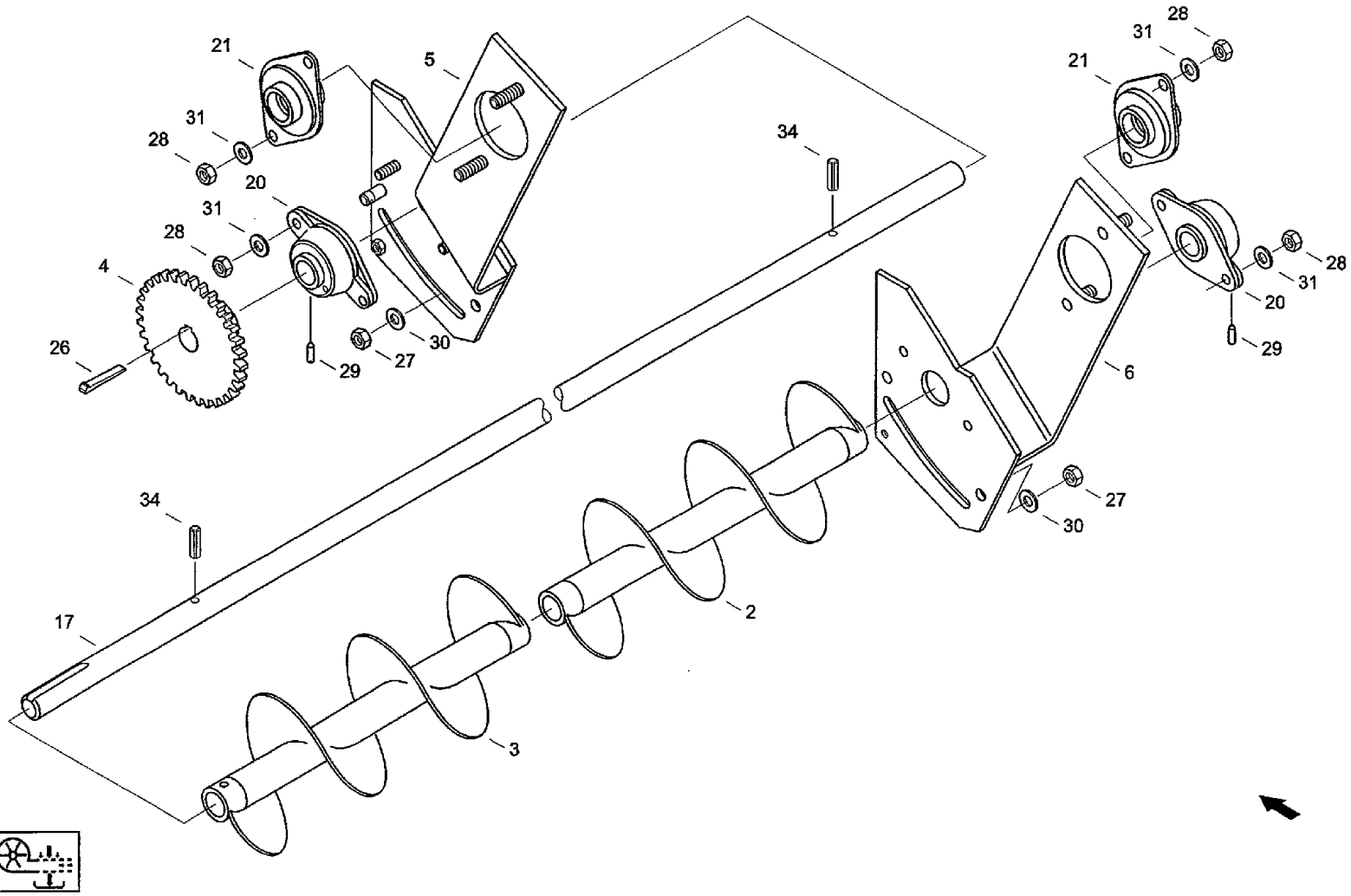

CF80 CASE IH CROSS FLOW COMBINE

C310 ADVANCEMENT- DISTRIBUTING SCREW

Ref	Part Number	Qty	Description	
2	31302541	1	WORM, Worm	525-53802:000/03 ШНЕК
3	31302566	1	WORM, Worm	525-53803:000/03 ШНЕК
4	061011655	1	GEAR, Wheel	C031-03.00.000 ШЕСТЕРНЯ
5	31287612	1	SUPPORT, Bearing plate l	C031-01.00.000-01 ОПОРНАЯ ПЛИТА
6	31287620	1	SUPPORT, Bearing plate r	C031-01.00.000 ОПОРНАЯ ПЛИТА
17	061011583	1	SHAFT, Shaft	C031-00.00.001 ВАЛ
20	060500366	2	CARRIER, BEARING, Flanged bearing OWF25U M.KEGELSCHMIERNIPPE	
21	060502681	2	CARRIER, BEARING, Flange bearing unit PFT 30TF	
26	003502351	1	KEY, BUCKET TOOTHRT, Gib-head key 8x7x56 DIN6887	
27	006269000	2	NUT, Hex nut M10DIN6924SW16-8	
28	825-1410	8	NUT, M10, Cl 8,	
29	006036805	2	SPLIT PIN/SAFETY PIN, Threaded pin M6x8-14H-A3C ISO7434	
31	06577003	8	WASHER, SPECIAL, Locking washer M10	
34	838-5836	2	PIN, LOCK, M8 x 36, Slotted, Roll pin 8x36 DIN1481 FST	
30	895-11010	2	WASHER, M10 x 20 x 2, Washer 10.5DIN125ST	

C320 ADVANCEMENT- GRAIN TANK, VARIOUS COMPONENTS

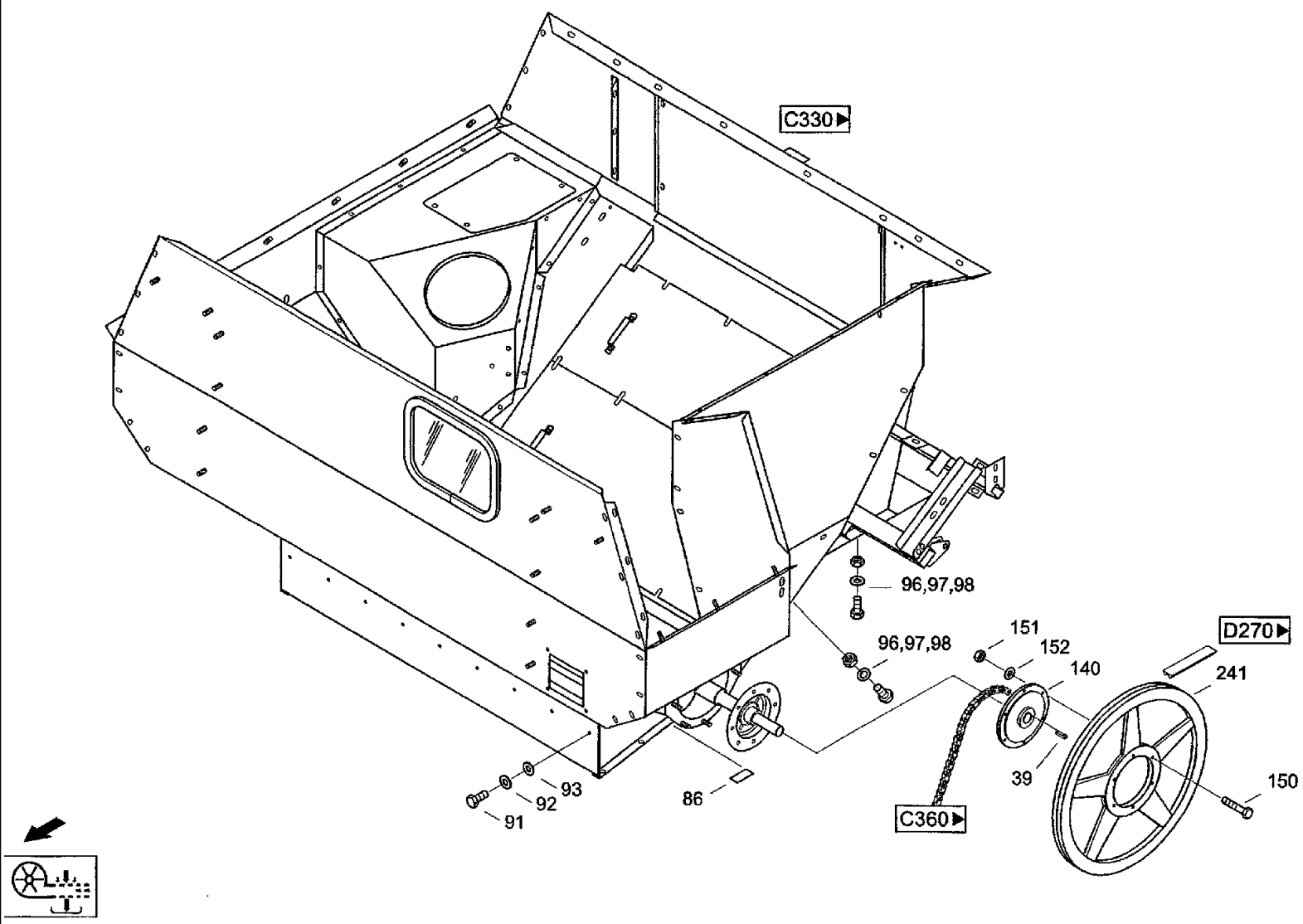

CF80 CASE IH CROSS FLOW COMBINE

C320 ADVANCEMENT- GRAIN TANK, VARIOUS COMPONENTS

Ref	Part Number	Qty	Description
39	03502497	1	KEY, Gib-head key 12x8x63 DIN6887
86	31301733	2	LINING, Seal
91	614-8020	9	BOLT, Hex, M8 x 20, 8.8, Hex bolt M8x20 ISO4017 8.8
92	06577044	9	WASHER, SPECIAL, Locking washer B8
93	06502638	9	WASHER, Washer R9 DIN440 100HV
96	614-10020	18	BOLT, Hex, M10 x 20, 8.8, Full Thd,
97	06577052	18	WASHER, SPECIAL, Locking washer B10
98	825-1410	18	NUT, M10, Cl 8,
140	31305833	1	HUB, Hub c032-30.10.000 ступица
150	614-10035	6	SCREW, Hex, M10 x 35, 8.8, Full Thd,
151	825-1410	6	NUT, M10, Cl 8,
152	06577003	6	WASHER, SPECIAL, Locking washer M10
241	05304690	1	GROOVED PULLEY, V-belt pulley
242		1	c032-30.20.000 корпус
243		1	c032-30.00.001 шайба

C330(01) ADVANCEMENT HOUSING

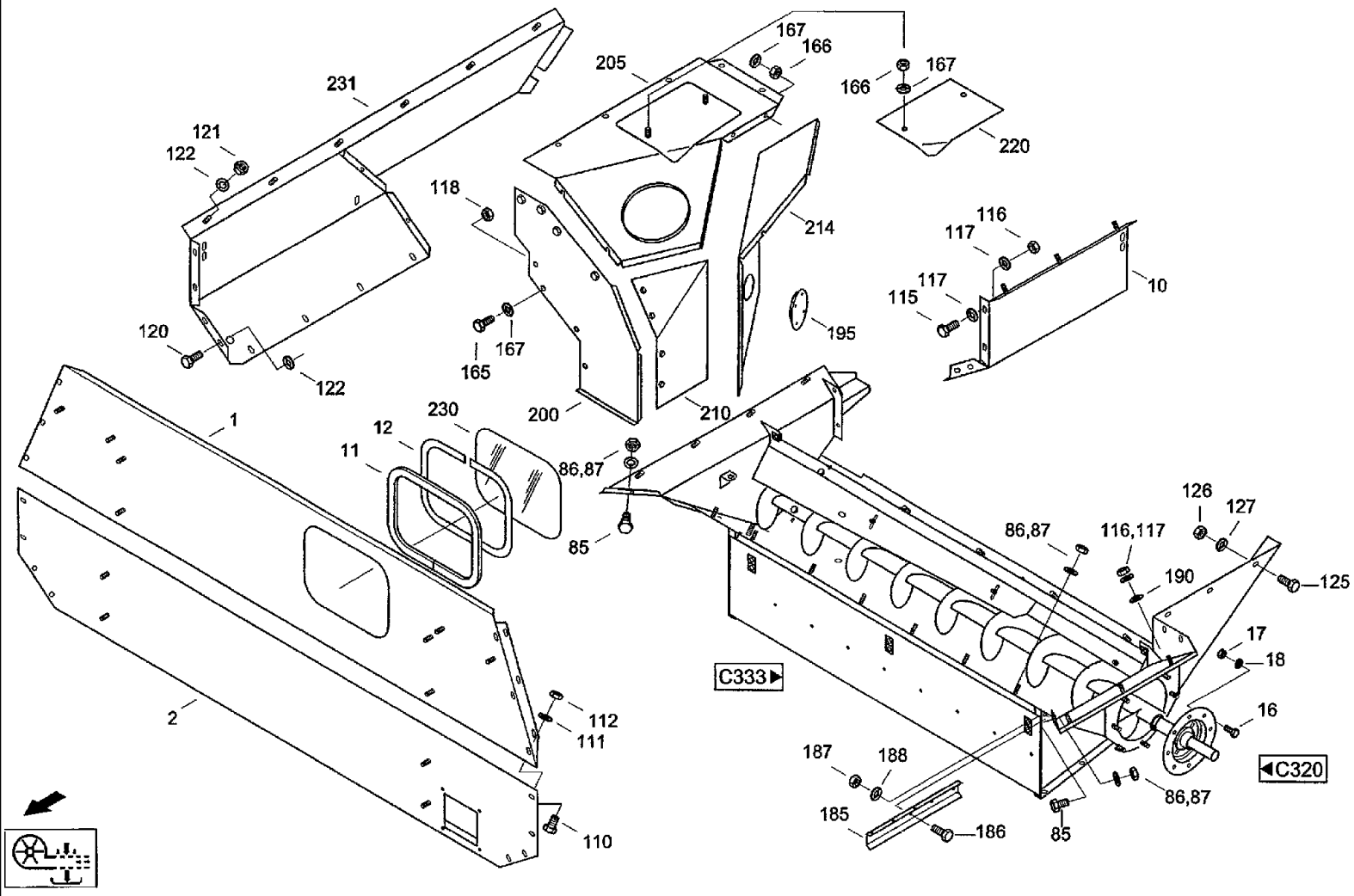

CF80 CASE IH CROSS FLOW COMBINE

C330(01) ADVANCEMENT HOUSING

Ref	Part Number	Qty	Description
112	825-1408	10	NUT, M8, Cl 8,
115	614-8020	8	BOLT, Hex, M8 x 20, 8.8, Hex bolt M8x20 ISO4017 8.8
116	825-1408	11	NUT, M8, Cl 8,
117	06577044	19	WASHER, SPECIAL, Locking washer B8
118	825-1410	12	NUT, M10, Cl 8,
120	614-8020	5	BOLT, Hex, M8 x 20, 8.8, Hex bolt M8x20 ISO4017 8.8
121	825-1408	9	NUT, M8, Cl 8,
122	06577044	14	WASHER, SPECIAL, Locking washer B8
125	614-8020	10	BOLT, Hex, M8 x 20, 8.8, Hex bolt M8x20 ISO4017 8.8
126	825-1408	10	NUT, M8, Cl 8,
127	06577044	20	WASHER, SPECIAL, Locking washer B8
130	825-1408	6	NUT, M8, Cl 8,
131	06577044	6	WASHER, SPECIAL, Locking washer B8
165	614-8020	25	BOLT, Hex, M8 x 20, 8.8, Hex bolt M8x20 ISO4017 8.8
166	825-1408	5	NUT, M8, Cl 8,
167	06577044	32	WASHER, SPECIAL, Locking washer B8
185	061068541	1	ANGLE, Angle BUNKER
186	614-12025	3	BOLT, Hex, M12 x 25, 8.8, Hex bolt M12x25ISO40178.8
187	825-1412	3	NUT, M12, Cl 8, Hex nut M12 ISO4032 8
188	06577011	3	PLATE, LOCKING, Locking washer M12
190	06502638	17	WASHER, Washer R9DIN440100HV
195	31331304	1	COVER, Cap
200	31340266	1	WALL, Front panel
205	31340290	1	COVER, Upper part c033-10.01.000 крышка
210	31340313	1	WALL, Corner plate

C330(02) ADVANCEMENT- HOUSING

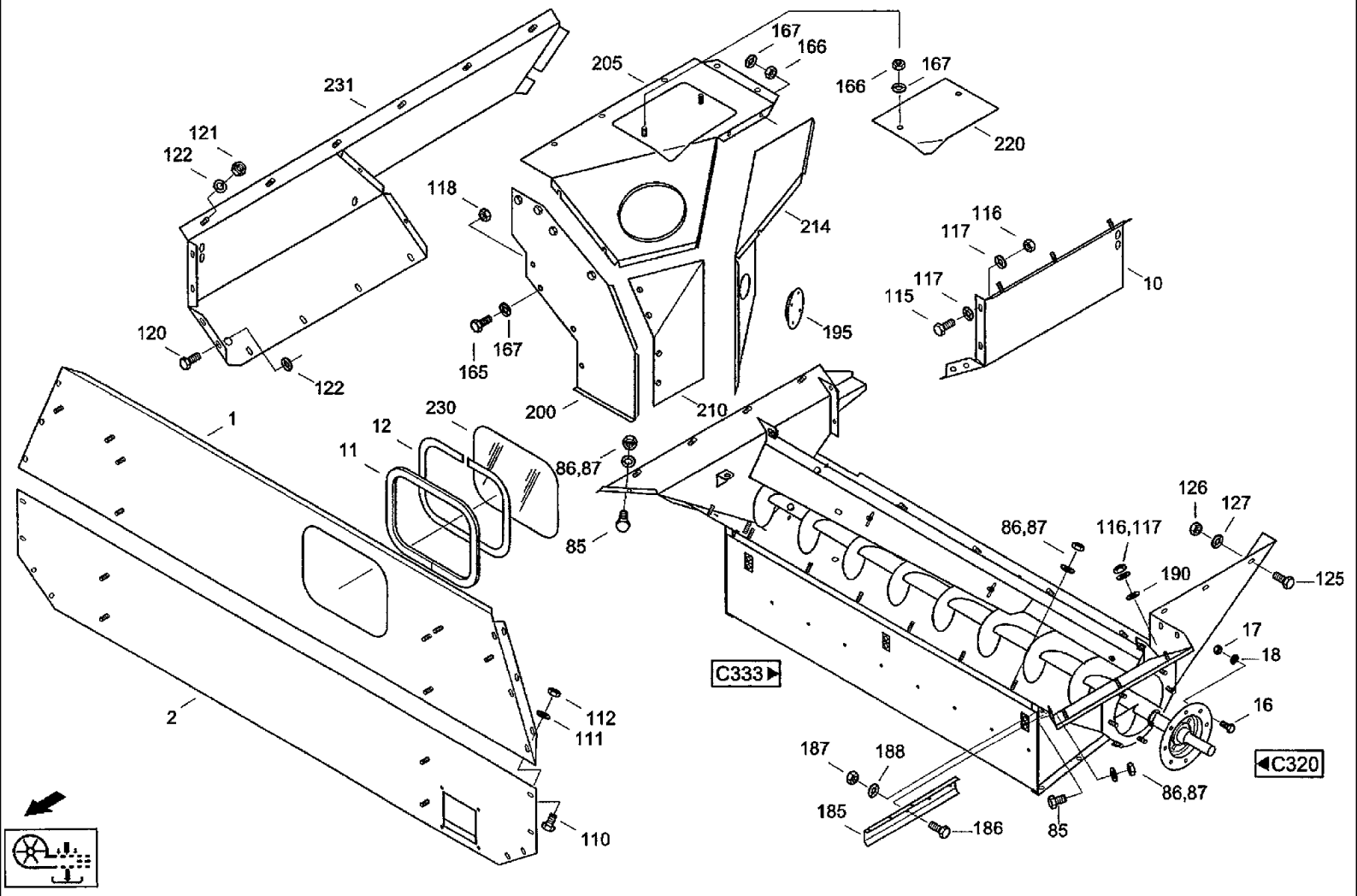

CF80 CASE IH CROSS FLOW COMBINE

C330(02) ADVANCEMENT- HOUSING

Ref	Part Number	Qty	Description
1	31319558	1	SHEET, Front panel
2	31289341	1	PARTITION, Front panel
5	31341820	1	PLATE, Rear wall
6	061072193	1	PLATE, Corner plate
10	061071842	1	WALL, Panel
11	31319590	1	SEAL, WINDOW, Holding rubber 1010210 VULKAN.M.FOLLPROF.
12	31334444	1	PROFILE, Filler profile 9,5x7,5
13	061072007	1	FRAME, Frame c035-50.01.000 рама
14	061072185	1	PLATE, Inner wall
16	614-8020	8	BOLT, Hex, M8 x 20, 8.8, Hex bolt M8x20ISO40178.8
17	825-1408	8	NUT, M8, Cl 8,
18	06577028	8	WASHER, SPECIAL, Locking washer M8
33	061072103	1	PLATE, Cap
35	825-1408	4	NUT, M8, Cl 8,
36	06577044	4	WASHER, SPECIAL, Locking washer B8
63	061072400	1	BOTTOM, Floor
74	061072425	1	BOTTOM, Floor
85	614-8016	3	BOLT, Hex, M8 x 16, 8.8,
86	825-1408	11	NUT, M8, Cl 8,
87	06577044	11	WASHER, SPECIAL, Locking washer B8
90	825-1408	4	NUT, M8, Cl 8,
91	614-8020	3	BOLT, Hex, M8 x 20, 8.8, Hex bolt M8x20 ISO4017 8.8
92	06577044	7	WASHER, SPECIAL, Locking washer B8
110	614-8020	10	BOLT, Hex, M8 x 20, 8.8, Hex bolt M8x20 ISO4017 8.8
111	06577044	20	WASHER, SPECIAL, Locking washer B8

CF80 CASE IH CROSS FLOW COMBINE

C330(03) ADVANCEMENT- HOUSING

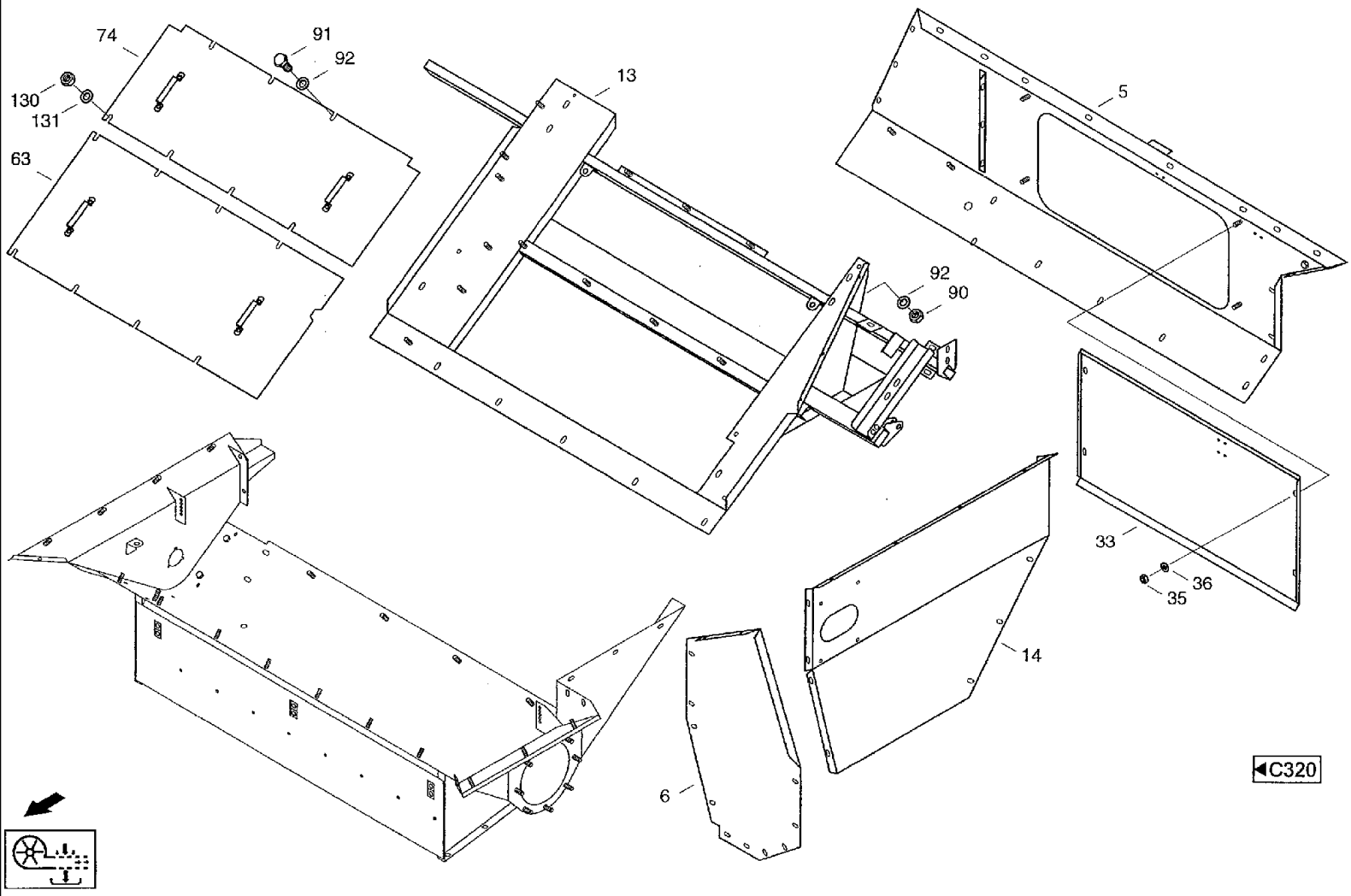

CF80 CASE IH CROSS FLOW COMBINE

C330(03) ADVANCEMENT- HOUSING

Ref	Part Number	Qty	Description	
214	31340338	1	COVER, Cap	c033-10.03.000 стенка нижняя
220	31340354	1	COVER, Cap	
230	31319574	1	GLASS, CAB, Glass	
231	31341845	1	WALL, Panel	

CF80 CASE IH CROSS FLOW COMBINE

C333 ADVANCEMENT- TROUGH

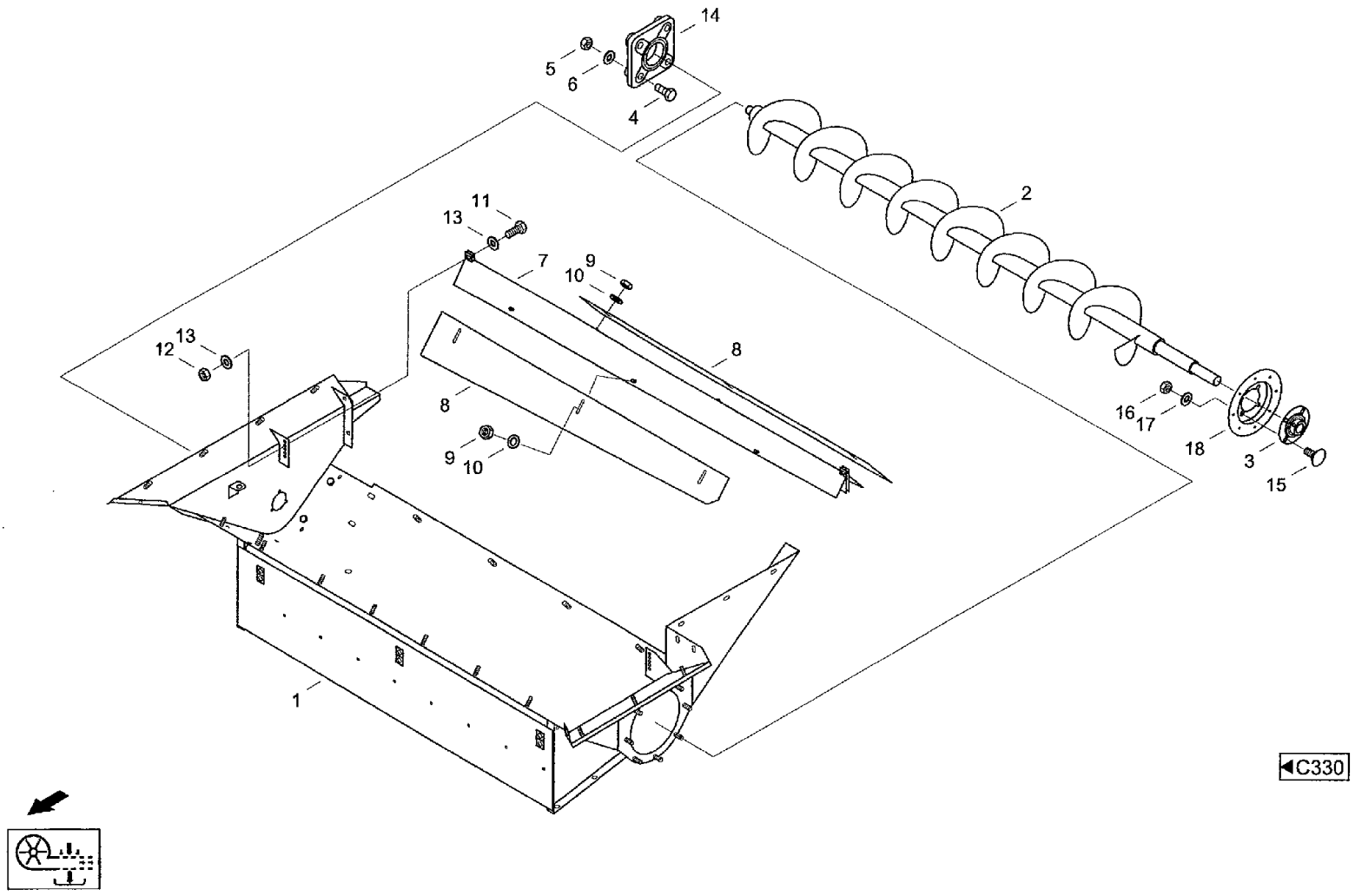

CF80 CASE IH CROSS FLOW COMBINE

C333 ADVANCEMENT- TROUGH

Ref	Part Number	Qty	Description
1	061071721	1	TROUGH, Trough c033-10.00.000 лоток
2	31348634N1	1	WORM, Discharge rail
3	060534037	1	BEARING, Flanged bearing ASPF208
4	614-12035	4	BOLT, Hex, M12 x 35, 8.8, Full Thd, Hex bolt M12x35ISO40178.8 .
5	825-1412	4	NUT, M12, Cl 8, Hex nut M12ISO40328
6	06577060	4	WASHER, Locking washer B12
7	061069245	1	ROOF, Roof
8	061069261	2	SPOOL, Spool
9	825-1408	6	NUT, M8, Cl 8,
10	06577044	6	WASHER, SPECIAL, Locking washer B8
11	614-10030	2	BOLT, Hex, M10 x 30, 8.8,
12	825-1410	2	NUT, M10, Cl 8,
13	06577052	4	WASHER, SPECIAL, Locking washer B10
14	060500696	1	CARRIER, BEARING, Flanged bearing FWS40U
15	07753107	4	SCREW, Flat-round-head screw M12x30DIN6038.8
16	825-1412	4	NUT, M12, Cl 8, Hex nut M12ISO40328
17	06577060	4	WASHER, Locking washer B12
18	061071867	1	FLANGE, Flange

C360 ADVANCEMENT- ASCENDING AUGER, VARIOUS COMPONENTS

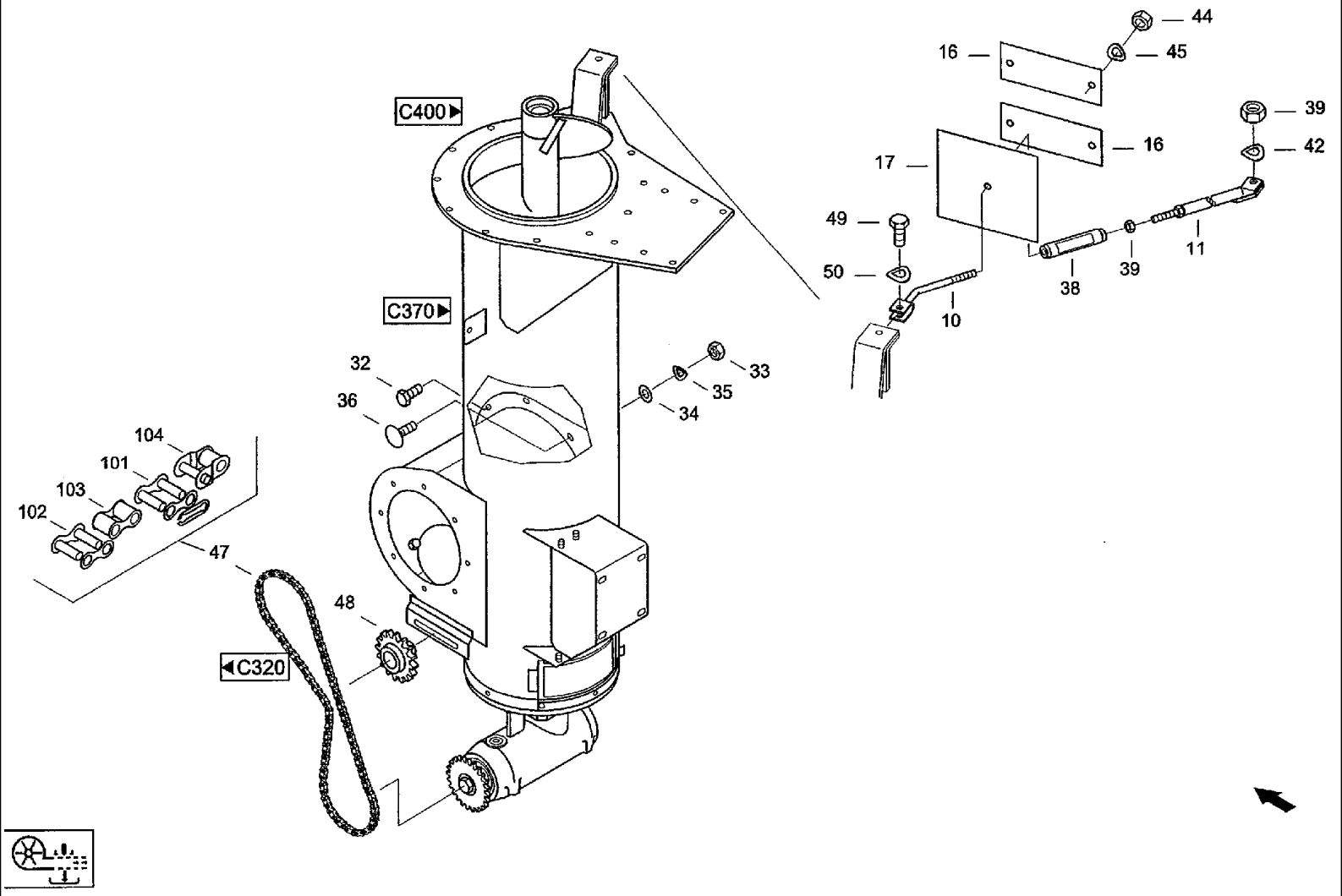

CF80 CASE IH CROSS FLOW COMBINE

C360 ADVANCEMENT- ASCENDING AUGER, VARIOUS COMPONENTS

Ref	Part Number	Qty	Description
10	061078793	1	CRADLE, Bowden cable 524-41510:000/04 вильчатая тяга
11	061078816	1	SUPPORT, Support 524-41511:000/04 подпорка
16	060021875	2	PROTECTOR, Cover strip
17	060021883	1	COVER, Cover plate
32	614-8025	3	BOLT, Hex, M8 x 25, 8.8,
33	825-1408	7	NUT, M8, Cl 8,
34	060029392	7	WASHER, Washer 17x8,3x2,5
35	06501380	7	WASHER, CUP, Wave washer spring
36	07753211	1	SCREW, Flat-round-head screw
38	006173540	1	NUT, Turnbuckle sleeve M12 DIN1480 528-41548:000/04 гайка
39	825-1412	2	NUT, M12, Cl 8, Hex nut M12IS040328
42	97022151	1	WASHER, SPRING, Wave washer spring B12DIN137FST
44	825-1406	4	NUT, M6, Cl 8,
45	06501397	4	WASHER, SPRING, Wave washer spring B6DIN137FST
47	060534117	1	CHAIN (AGRICULTURE), Roller chains 12A-1x64E DINS 188
48	021410395	1	IDLER, FRONT, Chain tensoiner TGL25805-12B-1x21
49	614-10035	1	SCREW, Hex, M10 x 35, 8.8, Full Thd,
50	06501428	1	WASHER, SPRING, Wave washer spring B10DIN137FST
101	98028092	1	CLIP, SPRING, Link chain E-12A-1 DIN8188
102	31327148	1	LINK, Link A-12A-1 DIN8188
103	31328864	1	LINK, Link B-12A-1 DIN8188
104	06845683	1	LINK, Link L-12A-1 DIN8188

C370 ADVANCEMENT- ASCENDING AUGER

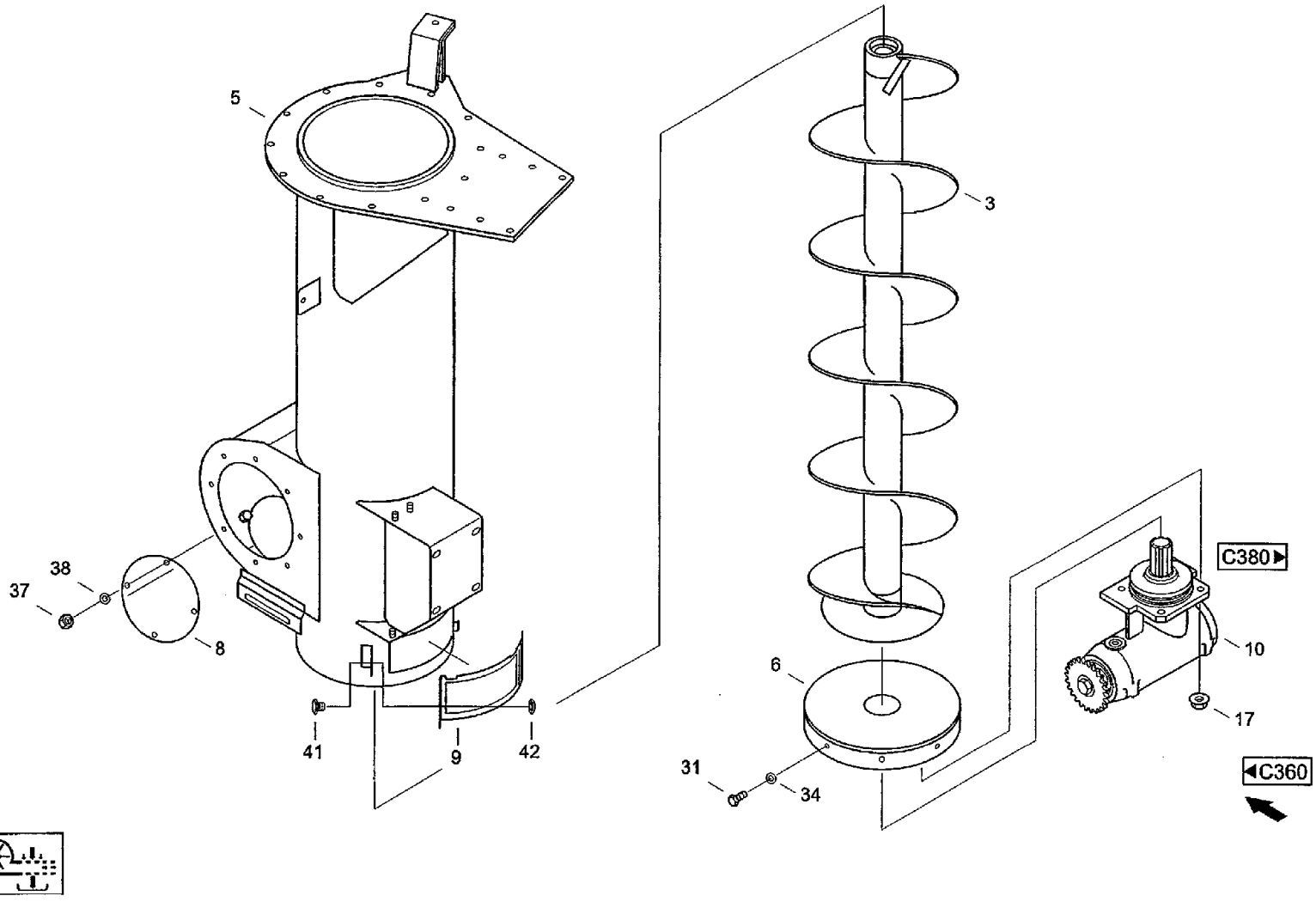

CF80 CASE IH CROSS FLOW COMBINE

C370 ADVANCEMENT- ASCENDING AUGER

Ref	Part Number	Qty	Description	
3	060022281	1	WORM, Ascending auger	524-41503:000/03 шнек
5	31303663	1	TUBE, Worm screw housing	c037-01.00.000 корпус шнека
6	060022923	1	BOTTOM, Floor	524-41506:000/03 днище
8	061078648	1	COVER, Cap	c037-00.00.001 крыша
9	060022031	1	FLAP, Door	524-41501:009/03 клапан
10	020053012	1	GEAR, Bevel gear 524 STEIGSCHNECKE	
17	060160651	4	NUT, Verbus nut B2W196.1-M128	
31	614-10022	8	BOLT, Hex, M10 x 22, 8.8, Full Thd, Hex bolt M10x22 ISO4017 8.8	
34	06577052	8	WASHER, SPECIAL, Locking washer B10	
37	825-1406	4	NUT, M6, Cl 8,	
38	06577036	4	WASHER, SPECIAL, Locking washer M6	
41	614-8025	1	BOLT, Hex, M8 x 25, 8.8,	
42	825-1408	2	NUT, M8, Cl 8,	

C380 ADVANCEMENT- BEVEL GEAR

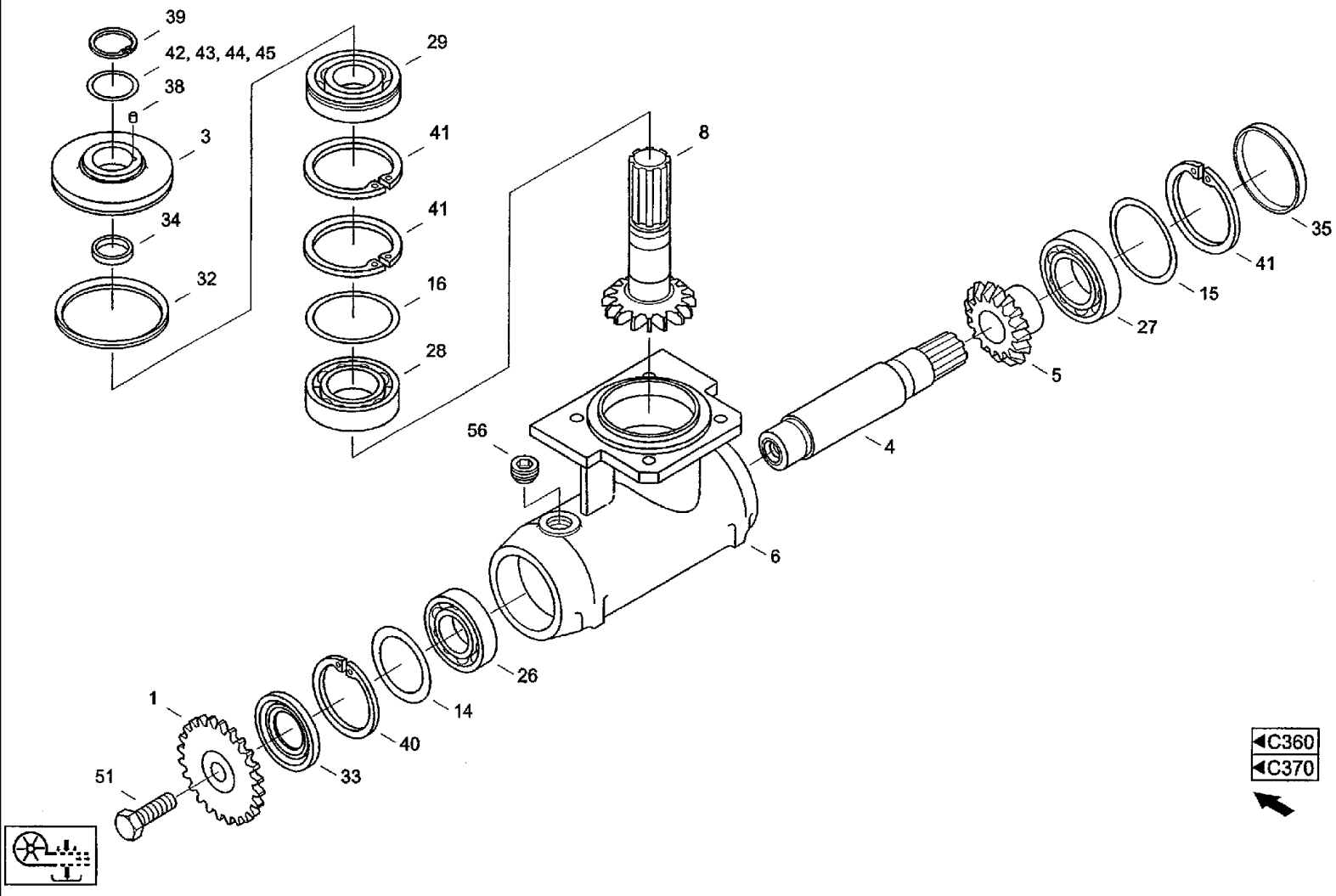

CF80 CASE IH CROSS FLOW COMBINE

C380 ADVANCEMENT- BEVEL GEAR

Ref	Part Number	Qty	Description
1	020050276	1	DRIVE SPROCKET, Sprocket SACH-NR.552216
3	020053053	1	COVER, Cap
4	020050307	1	SHAFT, Shaft SACH-NR.552218
5	020050315	1	PINION, CONE, Bevel gear SACH-NR.552219
6	020053037	1	CASE, Housing
8	020053078	1	SHAFT, Shaft
14	03702238	1	SHIM, Shim
15	20046183	2	SHIM, Shim SACH-NR.551358
16	020046191	2	SHIM, Shim SACH-NR.551428
26	03652106	1	BEARING, Grooved ball bearing 6208 DIN625
27	97060310	1	BEARING, Grooved ball bearing 6208 DIN625
28	03652741	1	BEARING, Grooved ball bearing 6308 DIN625
29	003680624	1	BEARING, Grooved ball bearing 6308-2RSN DIN625
32	001169532	1	SEAL, V-seal WVA-0100-N60B-AF
33	001119451	1	SEAL, Shaft seal TGL16454-(D40x80x 7)-NBR
34	01132176	1	O-RING, O-ring 32X3-NBR60 DIN3770
35	001309135	1	CAP, FILLER, Closing cap YR5938-90X8-N70
38	006123507	1	PIN, Plain pin 4H9x8-ST DIN7
39	800-1140	1	RING, SNAP, M40, Ext, Snap ring 40x1,75DIN471 FST
40	800-2180	1	RING, SNAP, M80, Int, Snap ring 80x2,5 DIN472 FST
41	800-2190	3	RING, SNAP, M90, Int, Snap ring 90x3 DIN472 FST
42	06609061	1	SHIM, Shim 40x50x0,2 DIN988
43	06609045	1	SHIM, Shim 40x50x0,5 DIN988
44	97020273	1	SHIM, Shim 40x50x1, ODIN988ST
45	06626794	1	SHIM, Shim 63x80x0,5 DIN988

C380 ADVANCEMENT- BEVEL GEAR

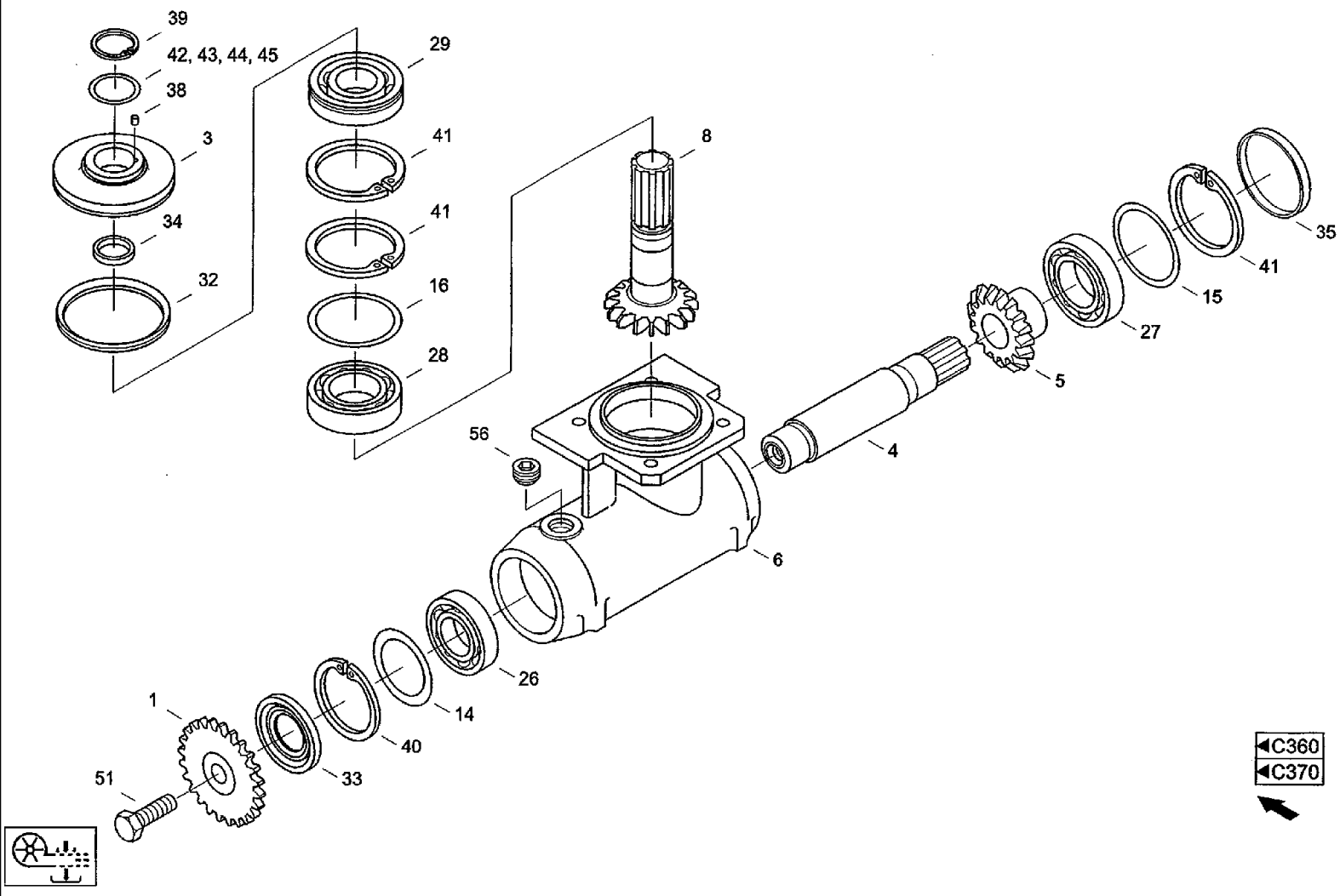

CF80 CASE IH CROSS FLOW COMBINE

C380 ADVANCEMENT- BEVEL GEAR

Ref	Part Number	Qty	Description
51	06360020	1	SCREW, Hex bolt M1 6x1, 5x55 ISO8676 8.8
56	06109445	1	VANEUM GAUGE, Locking screw M26X1.5DIN906ST

C400(01) ADVANCEMENT- TANK UNLOADING AUGER, VARIOUS COMPONENTS

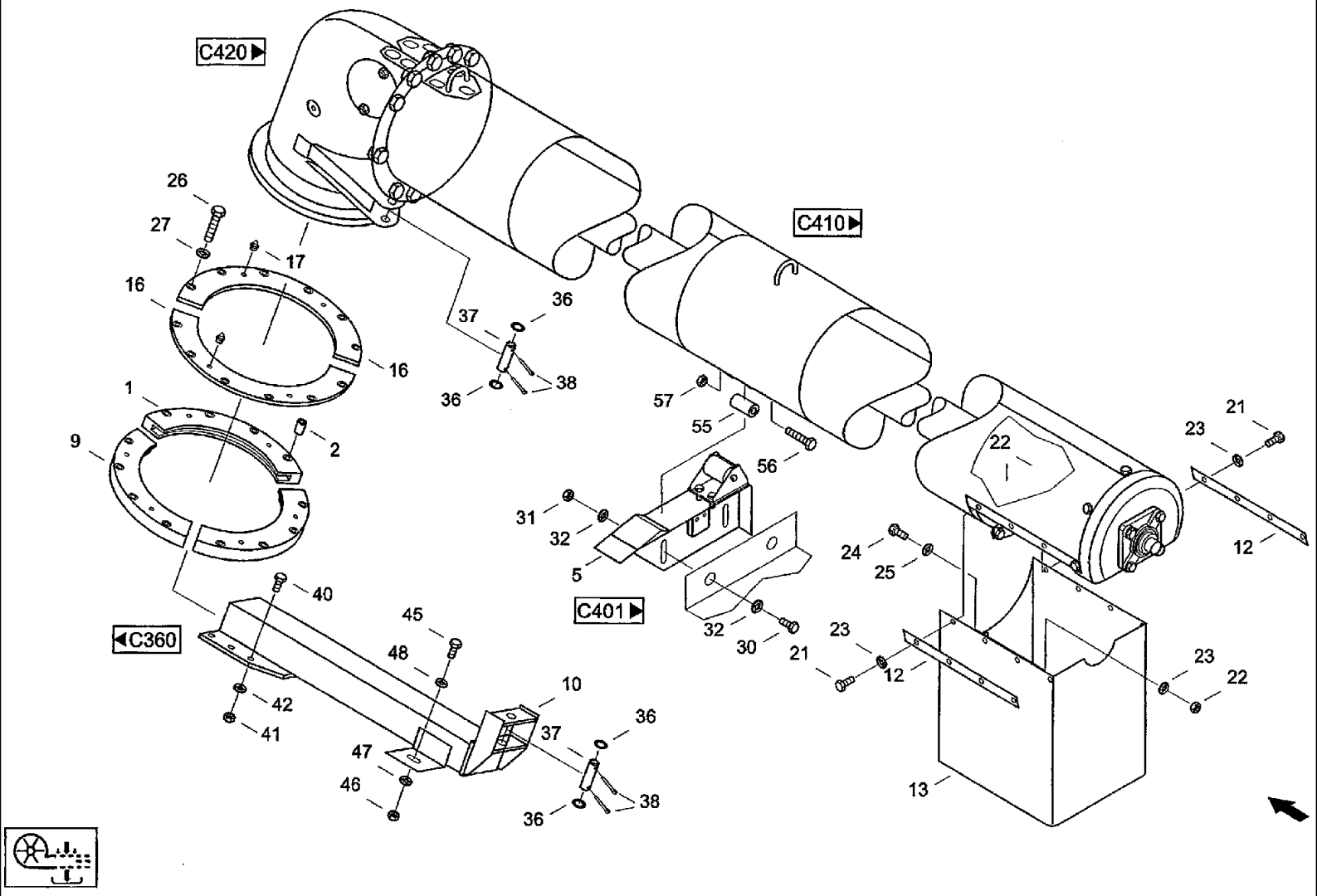

CF80 CASE IH CROSS FLOW COMBINE

C400(01) ADVANCEMENT- TANK UNLOADING AUGER, VARIOUS COMPONENTS

Ref	Part Number	Qty	Description
1	061032186	1	SECTOR, Segment
2	061032194	4	BUSHING, Sleeve 20x30x11,5
5	31286371	1	SUPPORT, Support
9	061032200	3	SEGMENT, Sliding segment
10	061032354	1	ARM, Arm C040-03.00.000 КРОНШТЕЙН
12	060025790	2	RAIL, Rail 524-51600:012/04 ШИНА
13	060025805	1	EXTENSION, Chute 524-51600:013/03 СПУСКНОЙ ЖЕЛОБ
16	061032178	2	SECTOR, Segment
17	03617064	4	NIPPLE, LUBE, Grease nippel AM10x1 DIN71412
21	614-6016	8	BOLT, Hex, M6 x 16, 8.8,
22	825-1406	9	NUT, M6, Cl 8,
23	06577124	9	WASHER, Locking washer B6
24	614-6020	1	BOLT, Hex, M6 x 20, 8.8, Hex bolt M6x20 ISO4017 8.8
25	895-25006	5	WASHER, M6 x 18 x 1.6, Washer 6,4 DIN9021
26	814-10060	12	BOLT, Hex, M10 x 60, 8.8,
27	06577003	12	WASHER, SPECIAL, Locking washer M10
30	614-12025	2	BOLT, Hex, M12 x 25, 8.8, Hex bolt M12x25ISO40178.8
31	825-1412	2	NUT, M12, Cl 8, Hex nut M12 ISO4032 8
32	06577060	4	WASHER, Locking washer B12
36	061032756	4	SPACER, Spacer washer
37	060519616	2	PIN, LARGE, Bolt B20F8x70x54-ST-A3C DIN1443
38	06402730	4	PIN, SPLIT (COTTER), Splint pin 5x32 DIN94 ST
40	614-12030	6	BOLT, Hex, M12 x 30, 8.8, Hex bolt M12x30ISO40178.8
41	825-1412	6	NUT, M12, Cl 8, Hex nut M12ISO40328
42	06577060	6	WASHER, Locking washer B12

C400(02) ADVANCEMENT- TANK UNLOADING AUGER, VARIOUS COMPONENTS

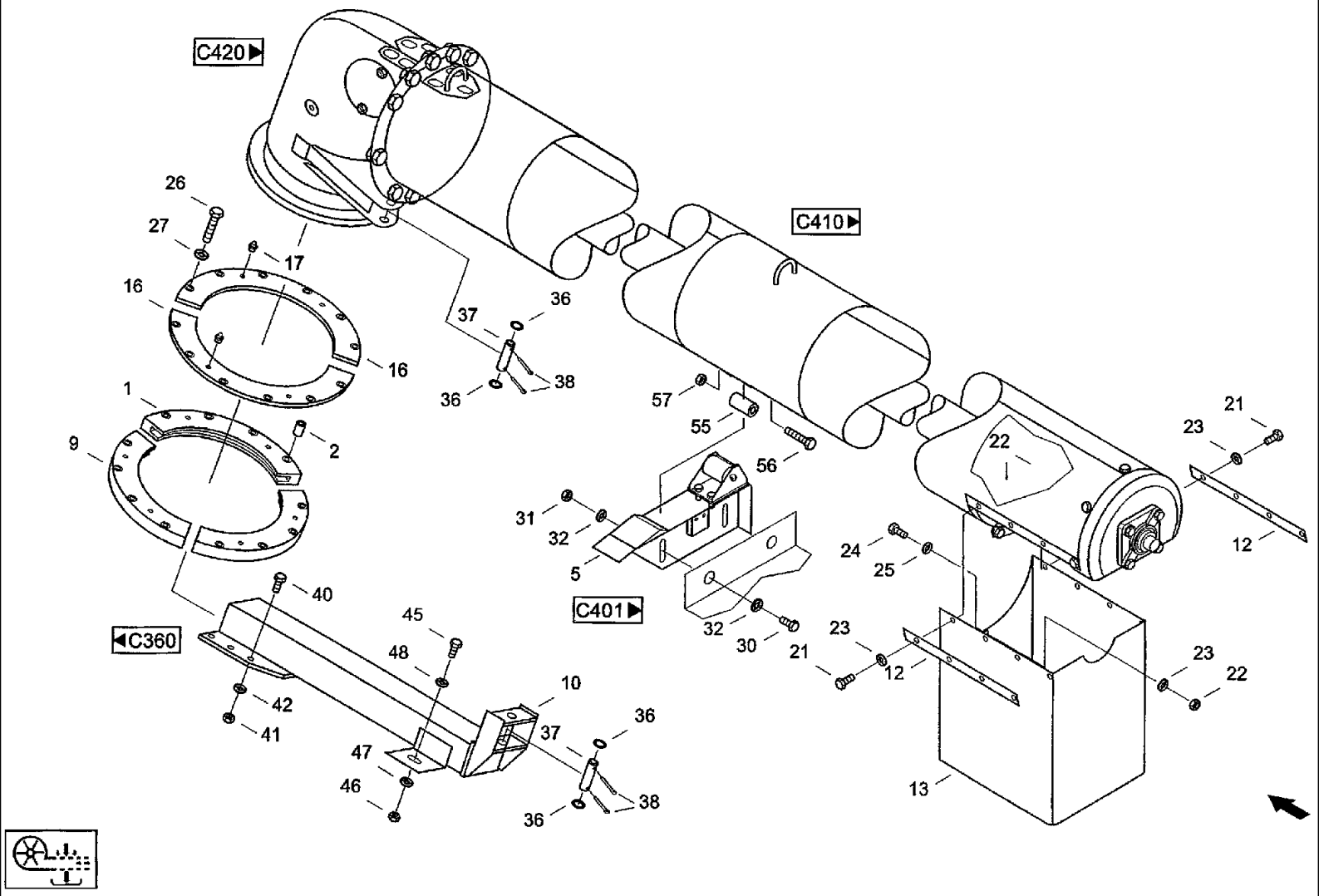

CF80 CASE IH CROSS FLOW COMBINE

C400(02) ADVANCEMENT- TANK UNLOADING AUGER, VARIOUS COMPONENTS

Ref	Part Number	Qty	Description
45	614-12040	1	BOLT, Hex, M12 x 40, 8.8, Full Thd,
46	825-1412	1	NUT, M12, Cl 8, Hex nut M12 ISO4032 8
47	06577060	2	WASHER, Locking washer B12
48	895-25012	2	WASHER, M12 x 37 x 3, Washer 13DIN9021 140HV
55	060207160	1	ROLLER, SHIFTER, Roller РОЛИК
56	814-8070	1	BOLT, Hex, M8 x 70, 8.8,
57	832-10408	1	NUT, M8 x 1.25, Cl 8, Hex nut M8 DIN982 8
58		1	КРОНШТЕЙН C040-00.00.001

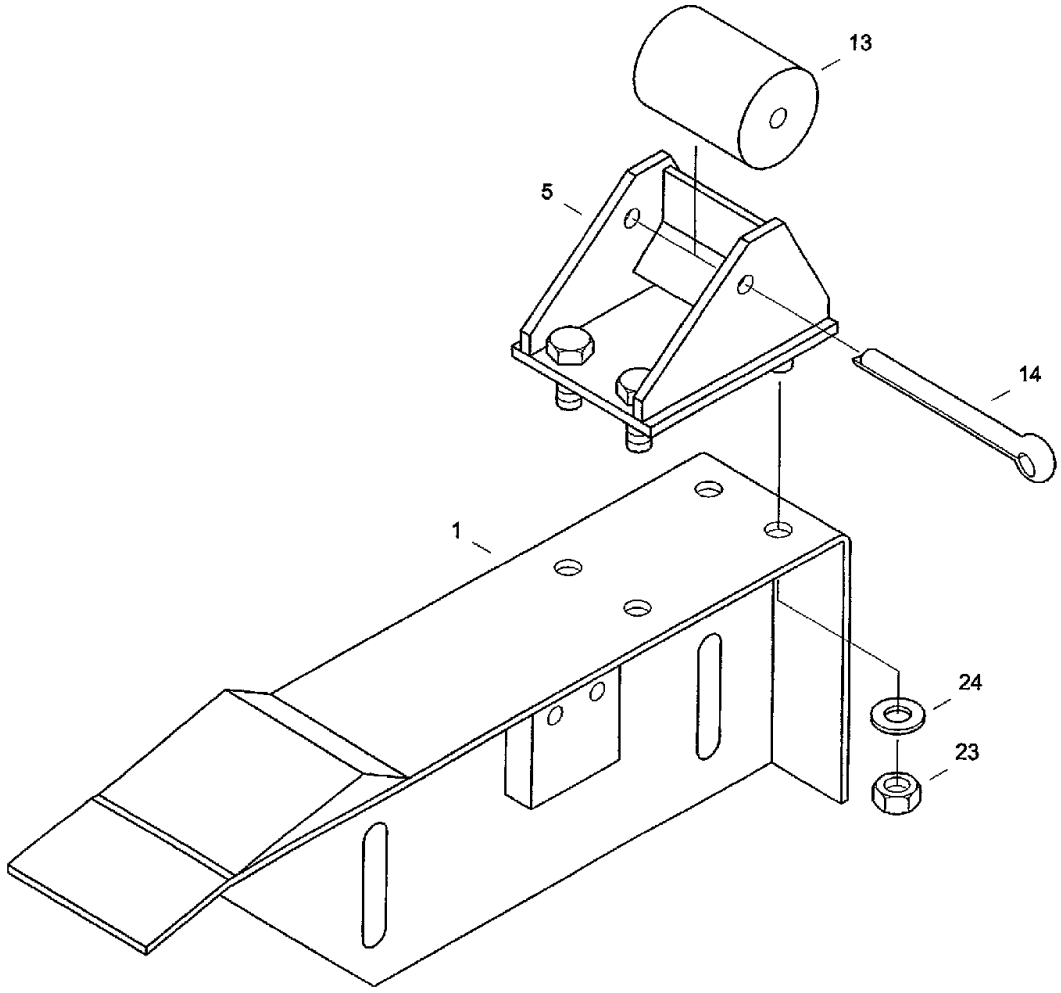

C400

CF80 CASE IH CROSS FLOW COMBINE

C401 ADVANCEMENT- SUPPORT

Ref	Part Number	Qty	Description
1	31286363	1	SUPPORT, Support C040-02.00.000 КРОНШТЕЙН
5	060026718	1	STOP, Stop 524-51605:005/03 УПОР
13	020219477	1	MOUNTING, RUBBER, Rubber bearing 5550-5700:050/04 ВТУЛКА РЕЗИНОВАЯ
14	006401184	1	PIN, SPLIT (COTTER), Splint pin 8x90 DIN94 ST
23	825-1410	4	NUT, M10, Cl 8,
24	06510285	4	WASHER, Washer 10.5DIN9021 100HV

CF80 CASE IH CROSS FLOW COMBINE

C410(01) ADVANCEMENT- TANK UNLOADING AUGER

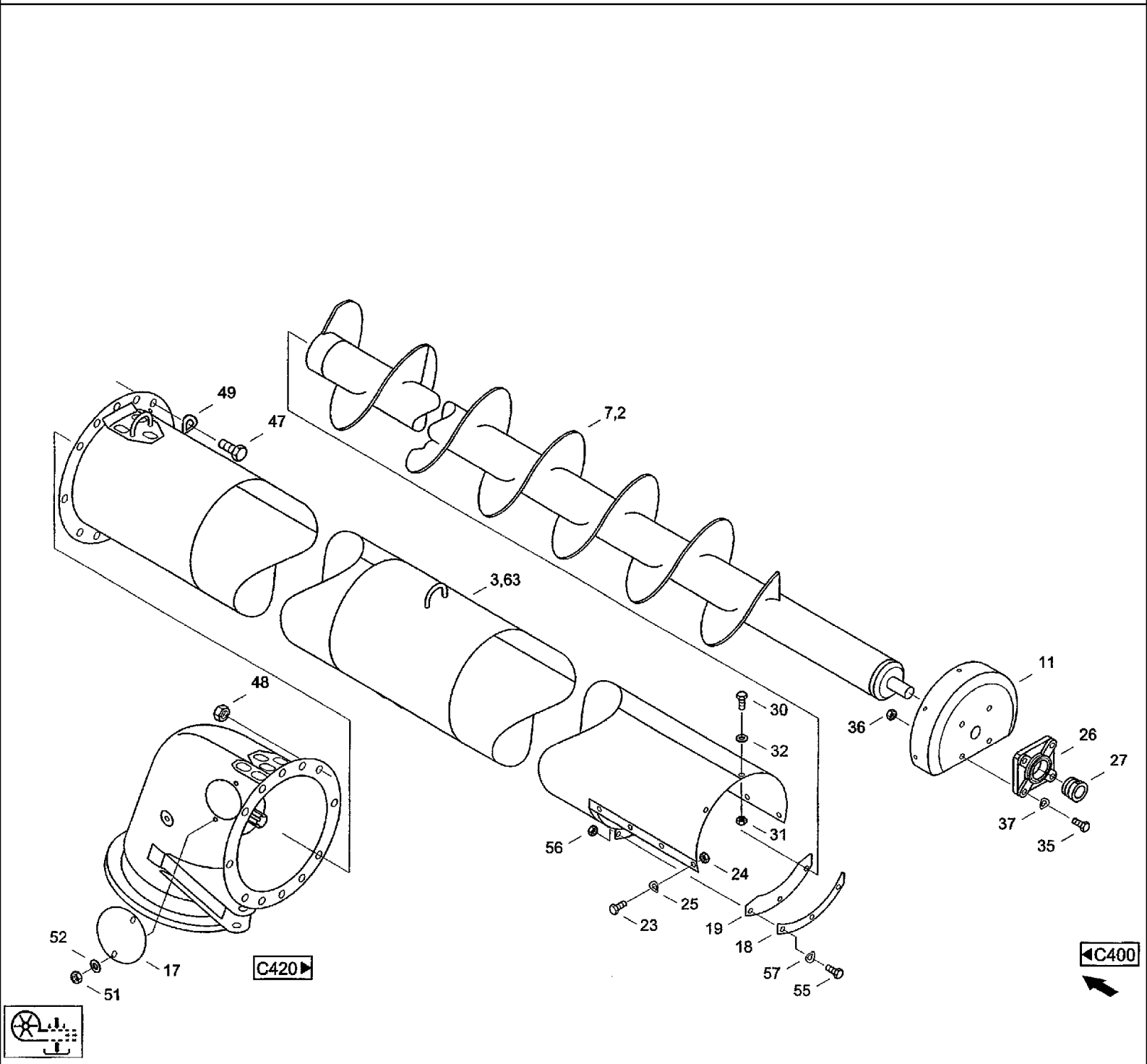

CF80 CASE IH CROSS FLOW COMBINE

C410(01) ADVANCEMENT- TANK UNLOADING AUGER

Ref	Part Number	Qty	Description	
2	31290528	1	WORM, Worm	C040-01.02.000 ШНЕК
3	061032450	1	TUBE, Auger tube 4575mm	
7	061050563	1	WORM, Worm	
11	060025950	2	COVER, Cap	524-51601:011/04 КРЫШКА
17	060026010	4	COVER, Cap	524-51601:017/04 КРЫШКА
18	060026027	2	SECTOR, Segment	524-51601:018/04 СЕКТОР
19	060026035	2	STRIP, SEALING, Sealing strip	524-51601:019/04 УПЛОТНИТЕЛЬНАЯ ПОЛОСА
23	614-8020	4	BOLT, Hex, M8 x 20, 8.8, Hex bolt M8X20ISO40178.8	
24	825-1408	4	NUT, M8, Cl 8,	
25	06501380	4	WASHER, CUP, Wave washer spring B8 DIN 137 FST	
26	060153314	2	CARRIER, BEARING, Flanged bearing TGL20906-FGE207K	
27	03674827	2	PIN, ROLL, Tension sleeve H2307 ST RGW776-7 7	
30	614-8016	6	BOLT, Hex, M8 x 16, 8.8,	
31	825-1408	6	NUT, M8, Cl 8,	
32	06577044	12	WASHER, SPECIAL, Locking washer B8	
35	614-12030	8	BOLT, Hex, M12 x 30, 8.8, Hex bolt M12x30ISO40178.8	
36	825-1412	8	NUT, M12, Cl 8, Hex nut M12 ISO4032 8	
37	97022151	8	WASHER, SPRING, Wave washer spring B12DIN137FST	
47	614-10022	24	BOLT, Hex, M10 x 22, 8.8, Full Thd, Hex bolt M10x22 ISO4017 8.8	
48	825-1410	24	NUT, M10, Cl 8,	
49	06501428	24	WASHER, SPRING, Wave washer spring B10DIN137FST	
51	825-1406	8	NUT, M6, Cl 8,	
52	895-25006	8	WASHER, M6 x 18 x 1.6, Washer 6,4 DIN9021	
55	614-6012	4	BOLT, Hex, M6 x 12, 8.8, Hex bolt M6x12ISO40178.8	
56	825-1406	4	NUT, M6, Cl 8,	

C410(02) ADVANCEMENT- TANK UNLOADING AUGER

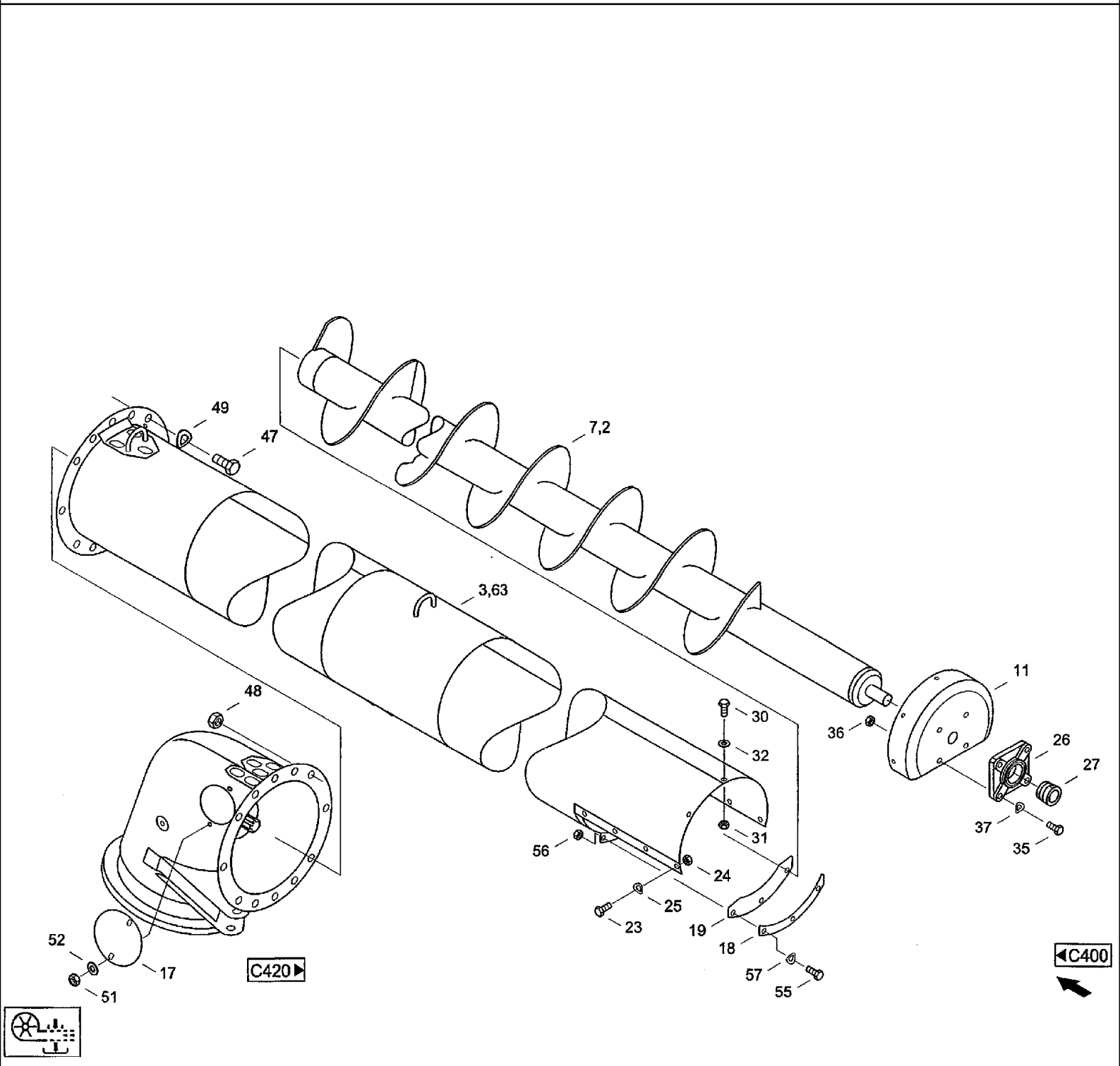

CF80 CASE IH CROSS FLOW COMBINE

C410(02) ADVANCEMENT- TANK UNLOADING AUGER

Ref	Part Number	Qty	Description
57	06501397	4	WASHER, SPRING, Wave washer spring B6 DIN 137 FST
63	31306867	1	TUBE, Auger tube 5225mm C040-01.01.000 ТРУБА ШНЕКА

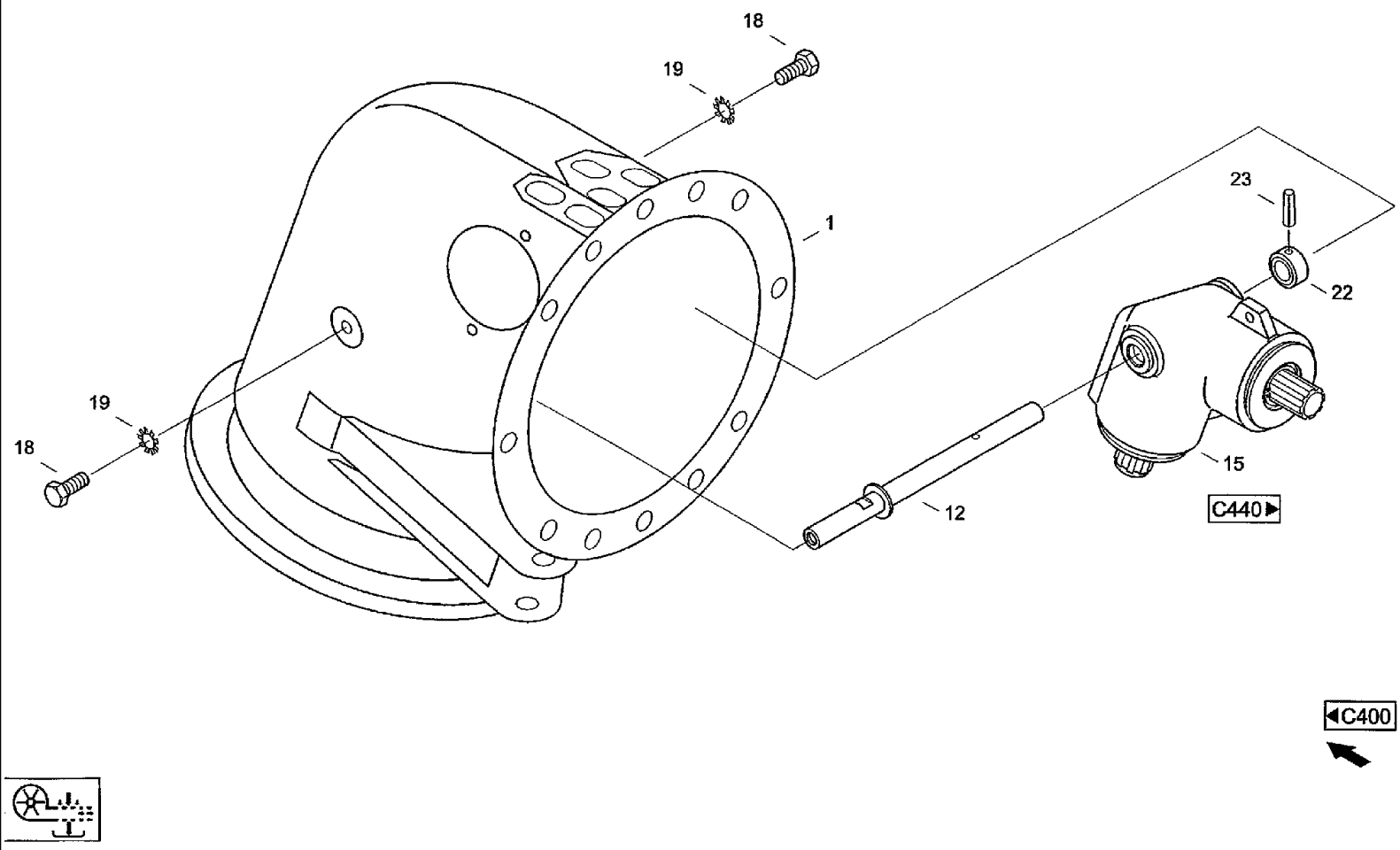
18
19
1
23
22
19
18
15
12
C440
C400

CF80 CASE IH CROSS FLOW COMBINE

C420 ADVANCEMENT- KNEE

Ref	Part Number	Qty	Description
1	061032241	2	KNEE, Knee 527-51600:001/02 КОЛЕНО
12	060026582	2	TRANSMISSION, Gear shaft 524-51604:012/04 ОСЬ РЕДУКТОРА
15	020050018	2	GEAR, Bevel gear GT-KR 524 B2 SACH-NR .551335 (
18	614-12025	4	BOLT, Hex, M12 x 25, 8.8, Hex bolt M12x25 ISO4017 8.8
19	893-11012	4	WASHER, LOCK, Ext Tooth, M12, Toothed washer A13DIN6797FST
22	006170915	2	RING, LOCKING, Adjusting ring B20-A3C DIN705
23	006130145	2	PIN, Notched dowel 5x30 DIN 1471 ST

CF80 CASE IH CROSS FLOW COMBINE

C440 ADVANCEMENT- BEVEL GEAR

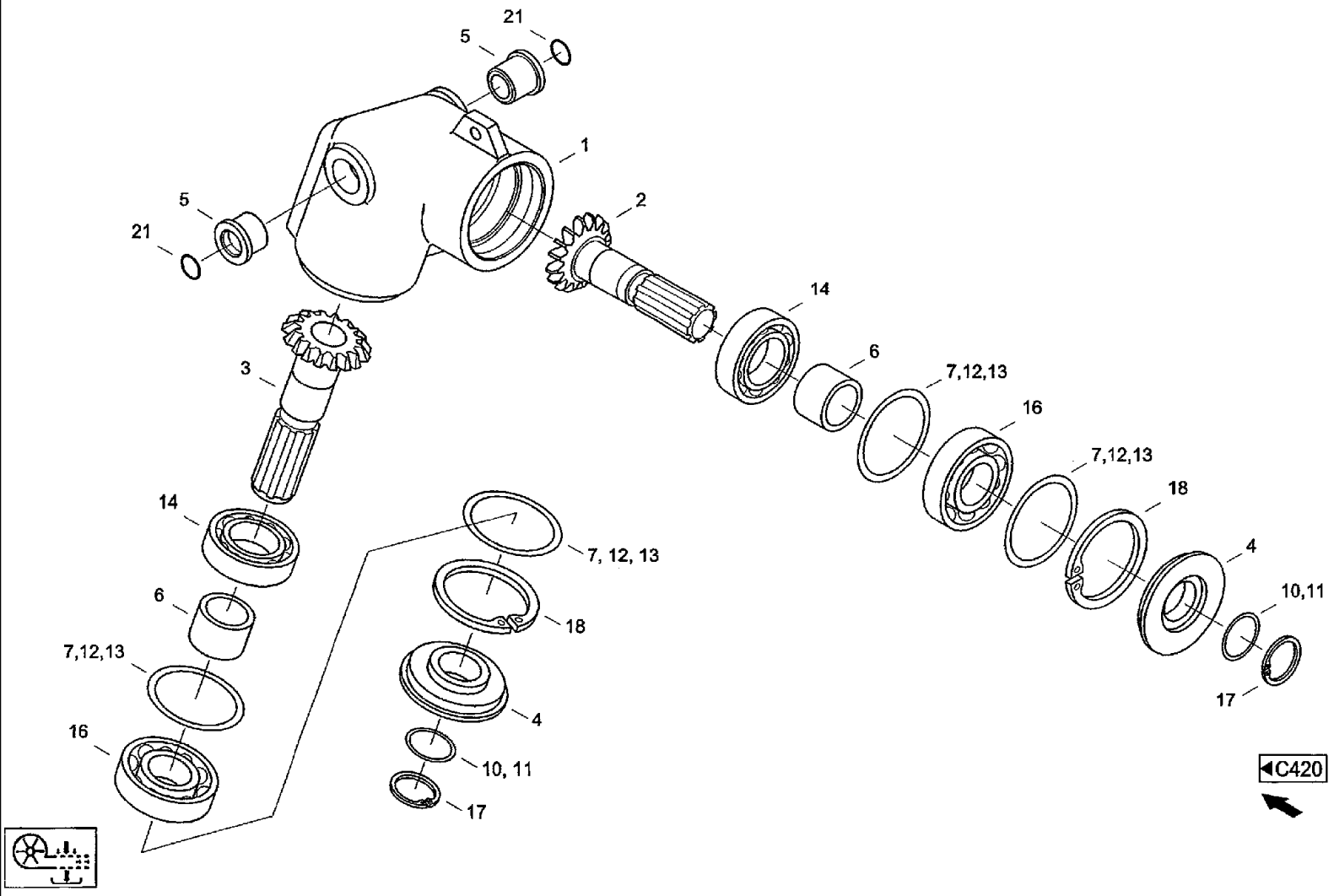

CF80 CASE IH CROSS FLOW COMBINE

C440 ADVANCEMENT- BEVEL GEAR

Ref	Part Number	Qty	Description
1	020050026	2	CASE, Housing SACH-NR.551336
2	020050042	2	SHAFT, Shaft SACH-NR.551338
3	020050067	2	SHAFT, Shaft SACH-NR.551340
4	020050075	4	BUSHING, Sleeve SACH-NR.551341
5	020050083	4	BUSHING, Sleeve SACH-NR.551342
6	020050091	4	BUSHING, Sleeve SACH-NR.551343
7	06635088	8	SHIM, Shim 63x80x0,2 DIN988
10	97022666	4	SHIM, Shim 35x45x0,1 DIN988ST
11	006608487	8	SHIM, Shim 35x45x0,2 DIN988
12	06626794	8	SHIM, Shim 63x80x0,5 DIN988
13	006623847	4	SHIM, Shim 63x80x1 ,0 DIN988
14	03652067	4	BEARING, Grooved ball bearing 6207 DIN625 LE
16	03679952	4	BEARING, Grooved ball bearing 6307-2RS DIN625
17	800-1135	4	RING, SNAP, M35, Ext, Snap ring 35x1,5 DIN471 FST
18	800-2180	4	RING, SNAP, M80, Int, Snap ring 80x2,5 DIN472 FST
21	001131126	4	O-RING, O-ring 20X3-NBR60 DIN3770

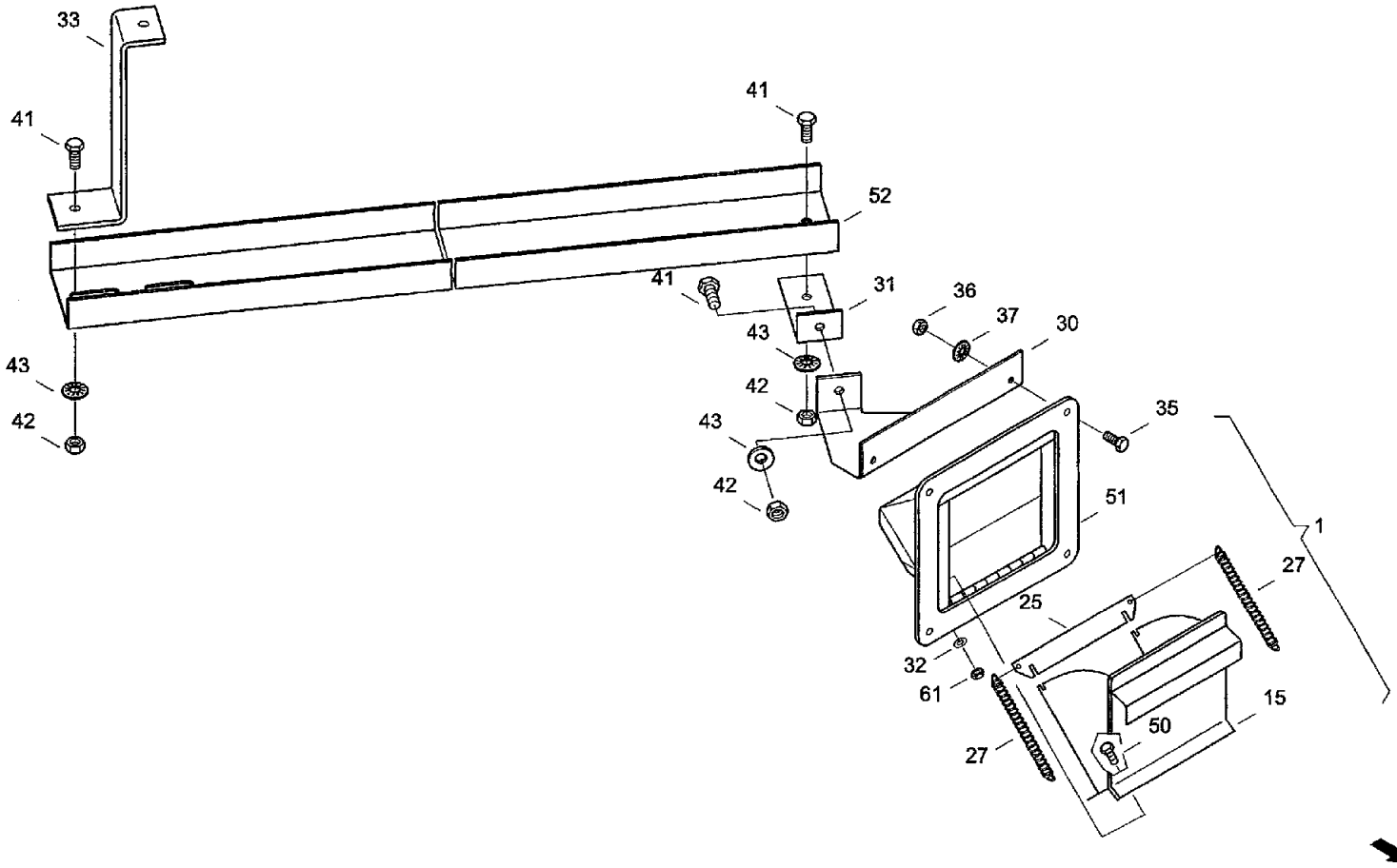
33
41
41
52
41
31
36
37
30
43
42
43
35
43
42
51
1
27
25
32
61
15
50
27

CF80 CASE IH CROSS FLOW COMBINE

C470 ADVANCEMENT- SAMPLING DEVICE

Ref	Part Number	Qty	Description
1	060023610	1	HATCH, ASSY., Sampling device
15	060023707	1	FLAP, Door 525-51801:015/02 клапан
25	060023764	1	BRIDGE, Reinforcing bar 525-51801:025/04 перемычка
27	060023998	2	SPRING, TENSION, Tension spring A1x11x60 525-51801:027/04 натяжная пружина
30	060023772	1	STIRRUP, Retaining profile 525-51800:030/04 крепежный уголок
31	060023780	1	ANGLE, Holding angle 525-51800:031/04 крепежный уголок
32	06577036	2	WASHER, SPECIAL, Locking washer M6
33	060023803	1	STIRRUP, Bracket 525-51800:033/04 крепежный фланец
35	614-6014	4	BOLT, Hex, M6 x 14, 8.8, Full Thd, Hex bolt M6x14 ISO4017 8.8
36	825-1406	4	NUT, M6, Cl 8,
37	06577036	4	WASHER, SPECIAL, Locking washer M6
41	614-8016	3	BOLT, Hex, M8 x 16, 8.8,
42	825-1408	3	NUT, M8, Cl 8, M6
43	06577028	3	WASHER, SPECIAL, Locking washer M8
50	614-6010	2	BOLT, Hex, M6 x 10, 8.8, Full Thd, Hex bolt M6X10ISO40178.8
51	060023627	1	CASE, Housing 525-51801:001/02 корпус
52	31286845	1	LINE, Channel c047-00.00.001 желоб
61	825-1406	2	NUT, M6, Cl 8,

C500(01) ADVANCEMENT- GRAIN AUGER, EAR AUGER

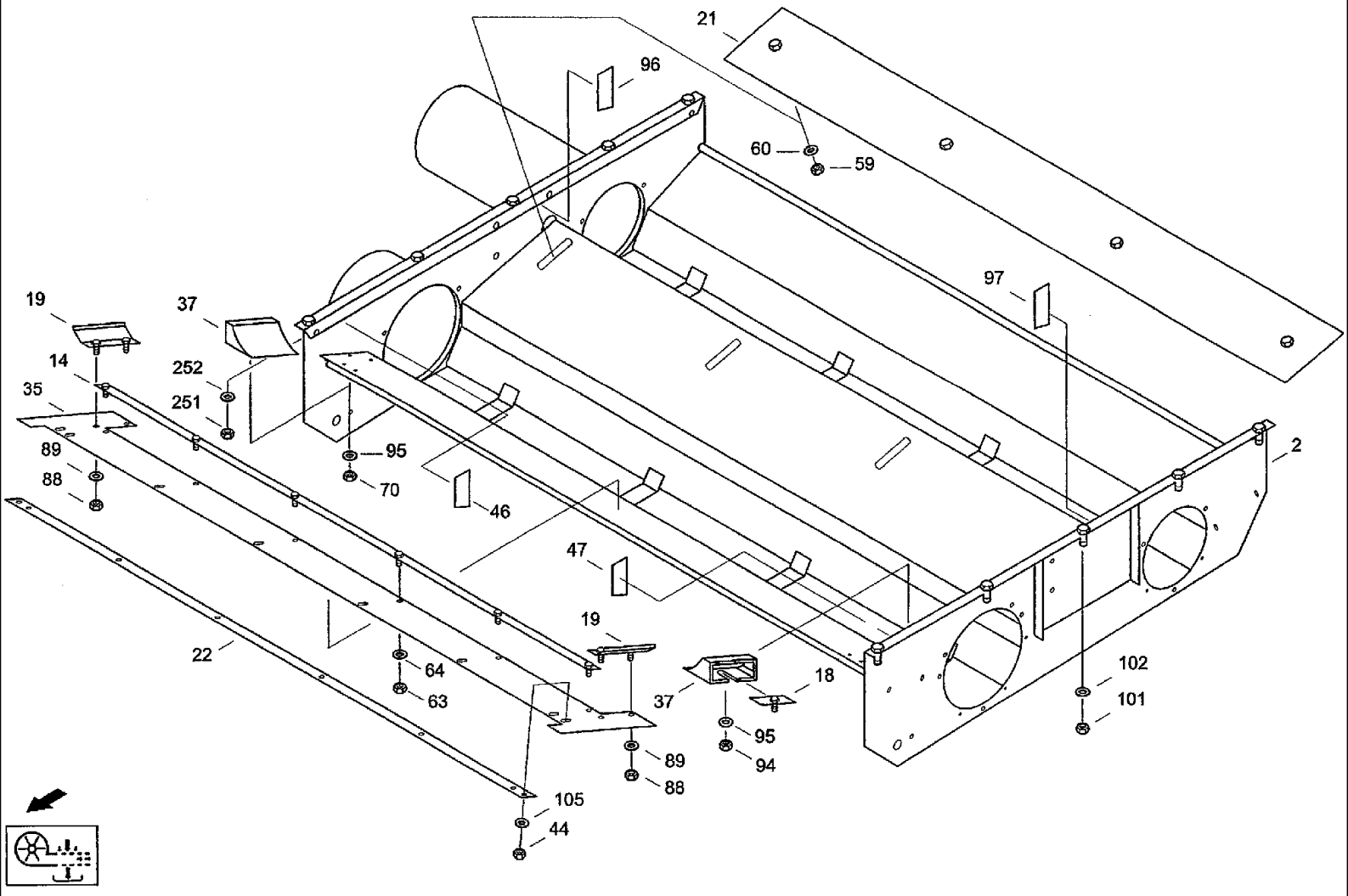

CF80 CASE IH CROSS FLOW COMBINE

C500(01) ADVANCEMENT- GRAIN AUGER, EAR AUGER

Ref	Part Number	Qty	Description
1	020221543	1	BUSHING, LARGE, Intaking ring
2	061068582	1	CASE, Housing c050-01.00.000 корпус
5	97060305	1	BEARING, Grooved ball bearing 6205 DIN625 SKF/
8	060112724	1	FLAP, Grain flap c050-02.00.000 зерновая заслонка
10	060112740	1	PLATE, LARGE, Ear flap c050-03.00.000 колосовая заслонка
14	060112765	1	REINFORCEMENT, Reinforcement c050-05.00.000 элемент жесткости
18	060049402	2	STIFFENER, Reinforcement 524-51318:000/04 элемент жесткости
19	060112781	2	RAIL, Rail KPL c050-06.00.000 планка
20	060049974	2	COVER, PROTECTIVE, Cover 524-51320:000/03 кожух
21	060112804	1	SPOOL, Spool c050-07.00.000 задвижка
22	060112451	1	REINFORCEMENT, Reinforcement c050-00.00.002 элемент жесткости
26	060049410	1	COVER, Cap 524-51301:026/04 крыша
27	060049427	1	COVER, Cap 524-51301:027/04 крыша
31	060049468	2	BEARING LINER, Bearing housing 524-51301:031/04 вкладыш подшипника
32	060049476	2	BEARING LINER, Bearing housing 524-51301:032/04 вкладыш подшипника
33	020242820	2	GASKET, Seal DI=31 DA=52 x8 mm WF II/22-M4- 5550-6000:043/04 уплотнительное кольцо
34	020086414	2	SEAL WASHER, Seal ring 25,2x51x0,2 5247-0501:045/04 уплотнительное кольцо
35	061068558	1	GASKET, Seal c050-00.00.005 уплотнение
37	060049507	2	PROFILE, Pipe fitting 524-51301:037/03 пластина
44	825-1408	8	NUT, M8, Cl 8,
45	060049886	2	O-RING, Ring 56x4 NBR70 524-51301:045/04 кольцо круглого сечения
46	060203487	1	GASKET, Seal LINKS 524-51301:046/04 уплотнение
47	060203495	1	GASKET, Seal RECHTS 524-51301:047/04 уплотнение
48	03617056	2	NIPPLE, LUBE, Grease nippel AM8x1 DIN71412
49	800-1125	2	RING, SNAP, M25, Ext, Snap ring 25x1,2DIN471 FST

C500(02) ADVANCEMENT- GRAIN AUGER, EAR AUGER

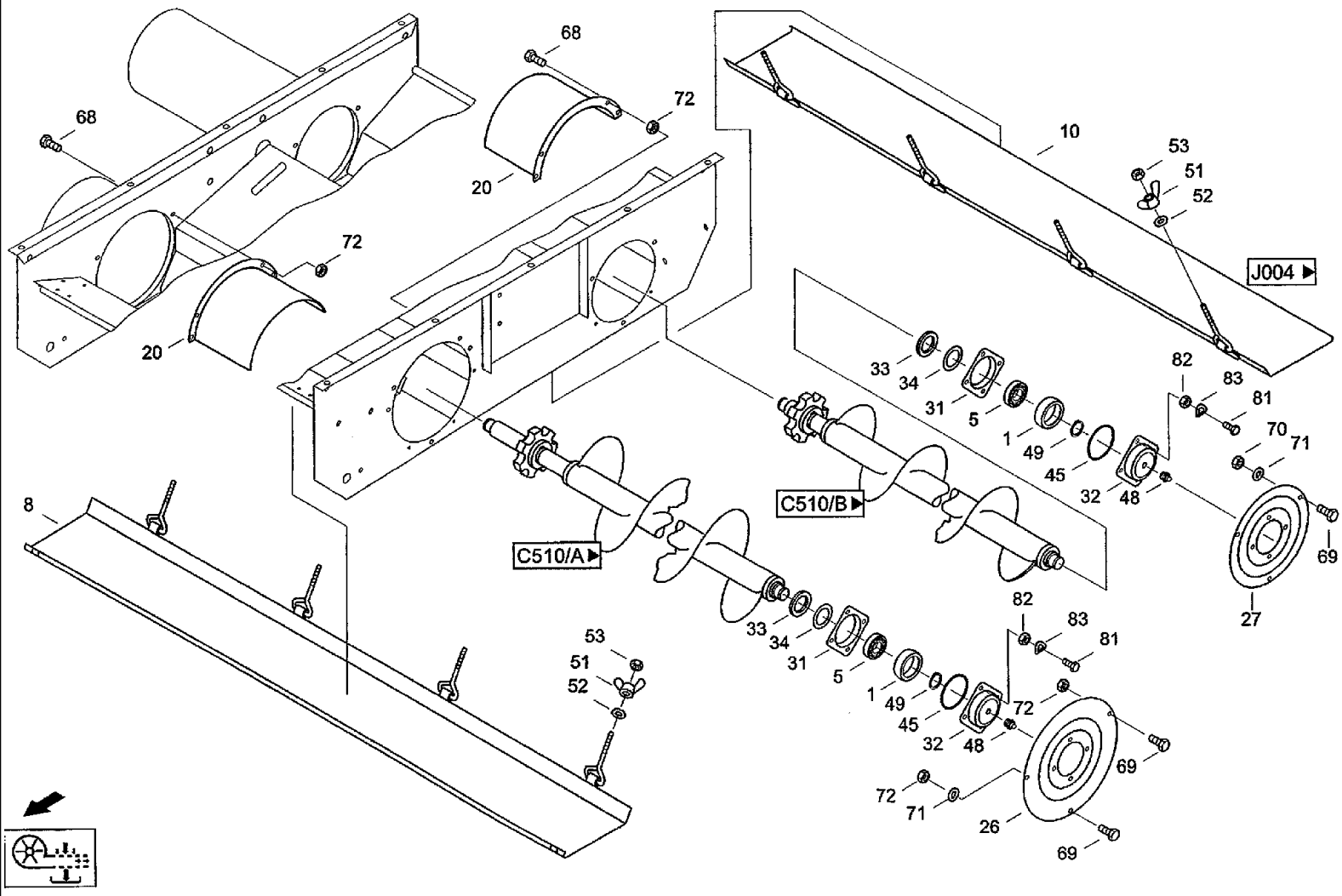

CF80 CASE IH CROSS FLOW COMBINE

C500(02) ADVANCEMENT- GRAIN AUGER, EAR AUGER

Ref	Part Number	Qty	Description
51	06110020	8	NUT, WING, Wing nut M6 DIN315 ST
52	895-11006	8	WASHER, M6, Washer 6,4 DIN125 ST
53	832-10406	8	NUT, M6 x 1, Cl 8, Hex nut M6 DIN982 8
59	825-1410	4	NUT, M10, Cl 8,
60	06577052	4	WASHER, SPECIAL, Locking washer B10
63	825-1408	6	NUT, M8, Cl 8,
64	06577028	6	WASHER, SPECIAL, Locking washer M8
68	864-8016	2	SCREW, Hex Soc Hd, M8 x 16, 8.8, Cheese-head screw M8x16DIN9128.8
69	614-8016	6	BOLT, Hex, M8 x 16, 8.8,
70	825-1408	4	NUT, M8, Cl 8,
71	06577028	4	WASHER, SPECIAL, Locking washer M8
72	832-46408	4	NUT, LOCK, M8 x 1.25, Cl 8,
81	614-10020	8	BOLT, Hex, M10 x 20, 8.8, Full Thd,
82	825-1410	8	NUT, M10, Cl 8,
83	06501428	8	WASHER, SPRING, Wave washer spring B10DIN137FST
88	825-1408	4	NUT, M8, Cl 8,
89	06577044	4	WASHER, SPECIAL, Locking washer B8
94	825-1408	2	NUT, M8, Cl 8,
95	06577044	2	WASHER, SPECIAL, Locking washer
96	061050854	1	GASKET, Seal LINKS
97	061050862	1	GASKET, Seal RECHTS
101	825-1410	10	NUT, M10, Cl 8,
102	97022011	10	SNAP RING, Locking ring VSK10DIN
105	06577044	8	WASHER, SPECIAL, Locking washer B8

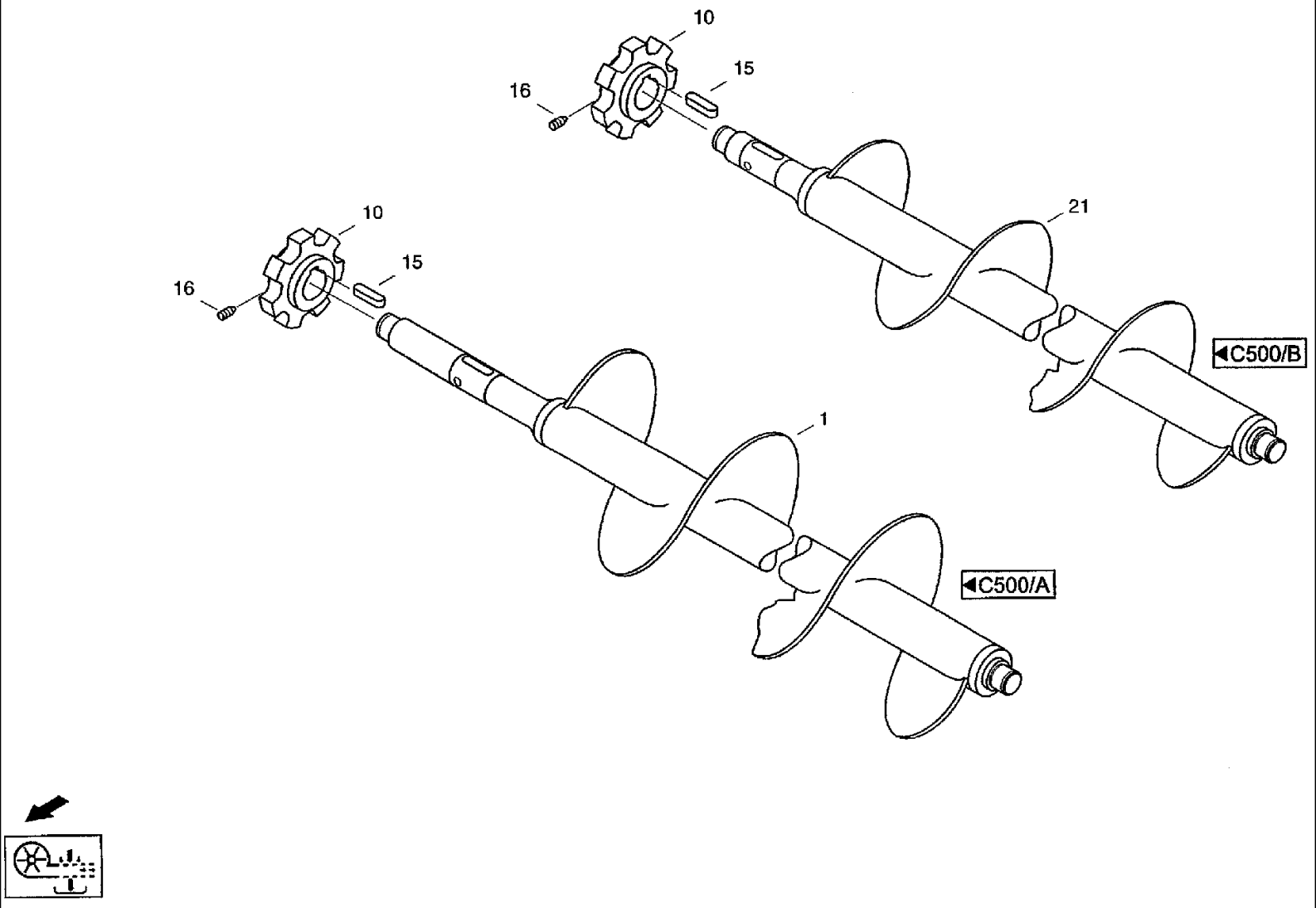
10
15
16
21
10
15
16
C500/B
1
C500/A

CF80 CASE IH CROSS FLOW COMBINE

C510 ADVANCEMENT- WORM

Ref	Part Number	Qty	Description
1	060112628	1	WORM, Worm c051-01.00.000 шнек
10	021012390	2	DRIVE SPROCKET, Sprocket RZ 021 012333 524-51401:023/01 звездочка
15	03501342	2	KEY, BUCKET TOOTHRT, Flat key A10x8x36 DIN6885 шпонка
16	060512378	2	PIN, Threaded pin M8X16 ISO4027 45H
21	060196357	1	WORM, Worm c052-01.00.000 шнек

C550(01) ADVANCEMENT- EAR ELEVATOR ASSEMBLY, VARIOUS COMPONENTS

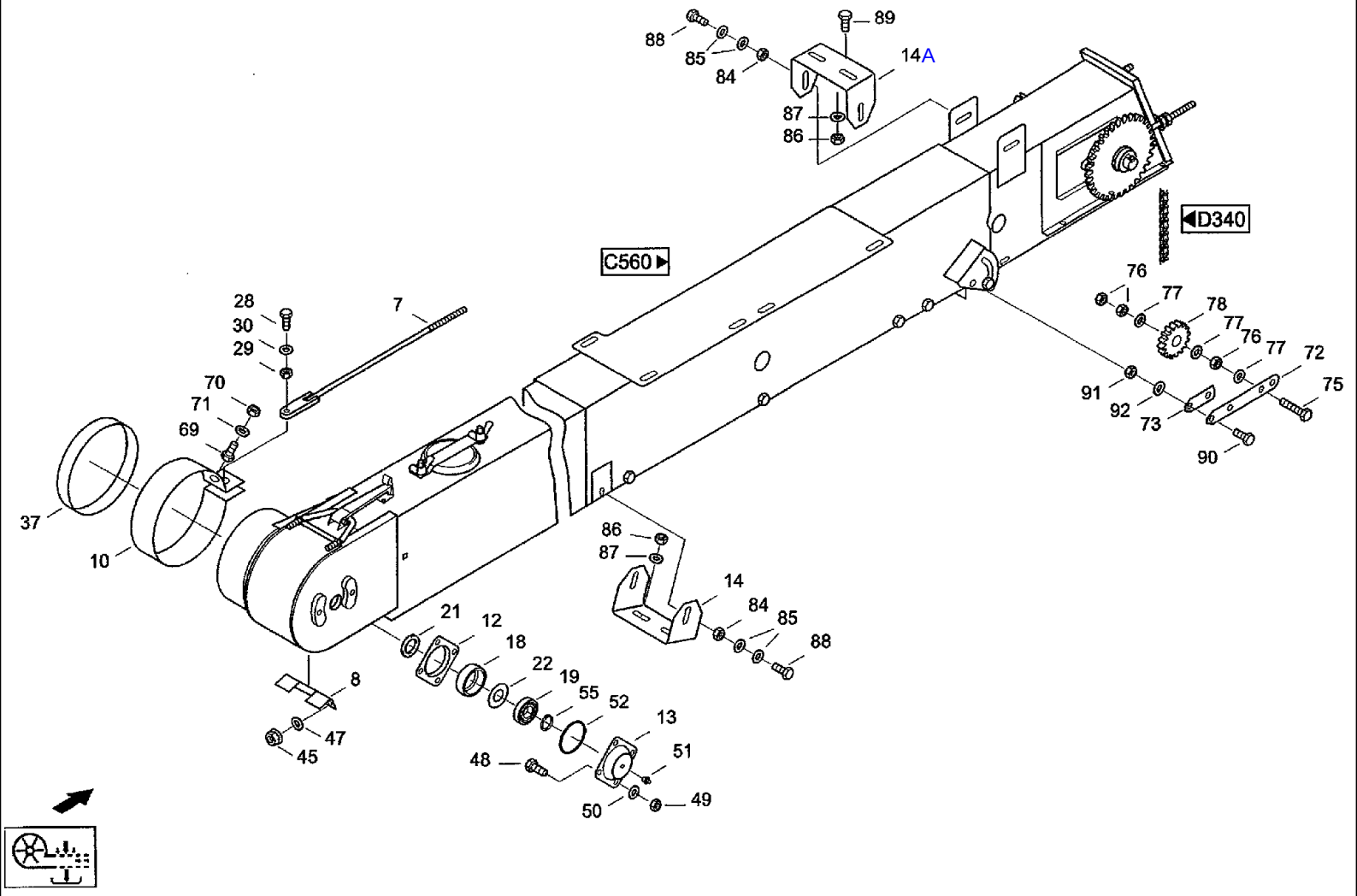

CF80 CASE IH CROSS FLOW COMBINE

C550(01) ADVANCEMENT- EAR ELEVATOR ASSEMBLY, VARIOUS COMPONENTS

Ref	Part Number	Qty	Description
7	072042490	1	STEM, Through bolt c055-40.00.000 стержень
8	060052510	1	GUIDE, Guide 524-51700:008/04 направляющая
10	020222954	1	CLAMP, Clamp D=186 MIT 2xD=12 UNO 1X D= 7 S 5550-6203:092/03 хомут
11	061075147	1	SHEET, Supporting plate c055-20.00.002 опорный щиток
12	060049468	1	BEARING LINER, Bearing housing 524-51301:031/04 вкладыш подшипника
13	060049476	1	BEARING LINER, Bearing housing 524-51301:032/04 вкладыш подшипника
14	072042521	2	SUPPORT, Bracket c055-00.00.001 крепление
15	020221510	2	BEARING LINER, Bearing housing 5550-6000:031/04 вкладыш
17	31288822	1	STRIP, SEALING, Sealing strip ZELLKAUTSCHUK
18	020221543	2	BUSHING, LARGE, Intaking ring 5550-6000:039 корпус подшипника
19	97060305	1	BEARING, Grooved ball bearing 6205 DIN625 SKF/
20	03651058	1	BEARING, Grooved ball bearing 6205-2RS DIN625
21	020257056	1	GASKET, Seal 524-51700:088/04 уплотнительная шайба
22	020222302	1	SEAL WASHER, Seal ring 5550-6200:075/04 уплотнительная шайба
23	020086414	1	SEAL WASHER, Seal ring 25,2x51x0,2 5247-0501:045/04 уплотнительная шайба
25	060052502	1	GASKET, Seal 5550-6200:025/04 уплотнительная шайба
26	31287766	1	DRIVE SPROCKET, Sprocket 27Z c055-20.40.000 звездочка
27	31287782	1	SUPPORT, Support INITIATOR c055-20.00.003 держатель
28	614-10040	1	BOLT, Hex, M10 x 40, 8.8, Full Thd, Hex bolt M10x40IS040178.8
29	825-1410	1	NUT, M10, Cl 8,
30	06577003	1	WASHER, SPECIAL, Locking washer M10
31	060054498	1	SPACER, Spacer ring 524-51705:029/04 распорное кольцо
33	825-1410	2	NUT, M10, Cl 8,
35	060182800	1	GASKET, Seal DURCHM.160x30x2 mm GUMMI VU
36	06577052	2	WASHER, SPECIAL, Locking washer B10

C550(02) ADVANCEMENT- EAR ELEVATOR ASSEMBLY, VARIOUS COMPONENTS

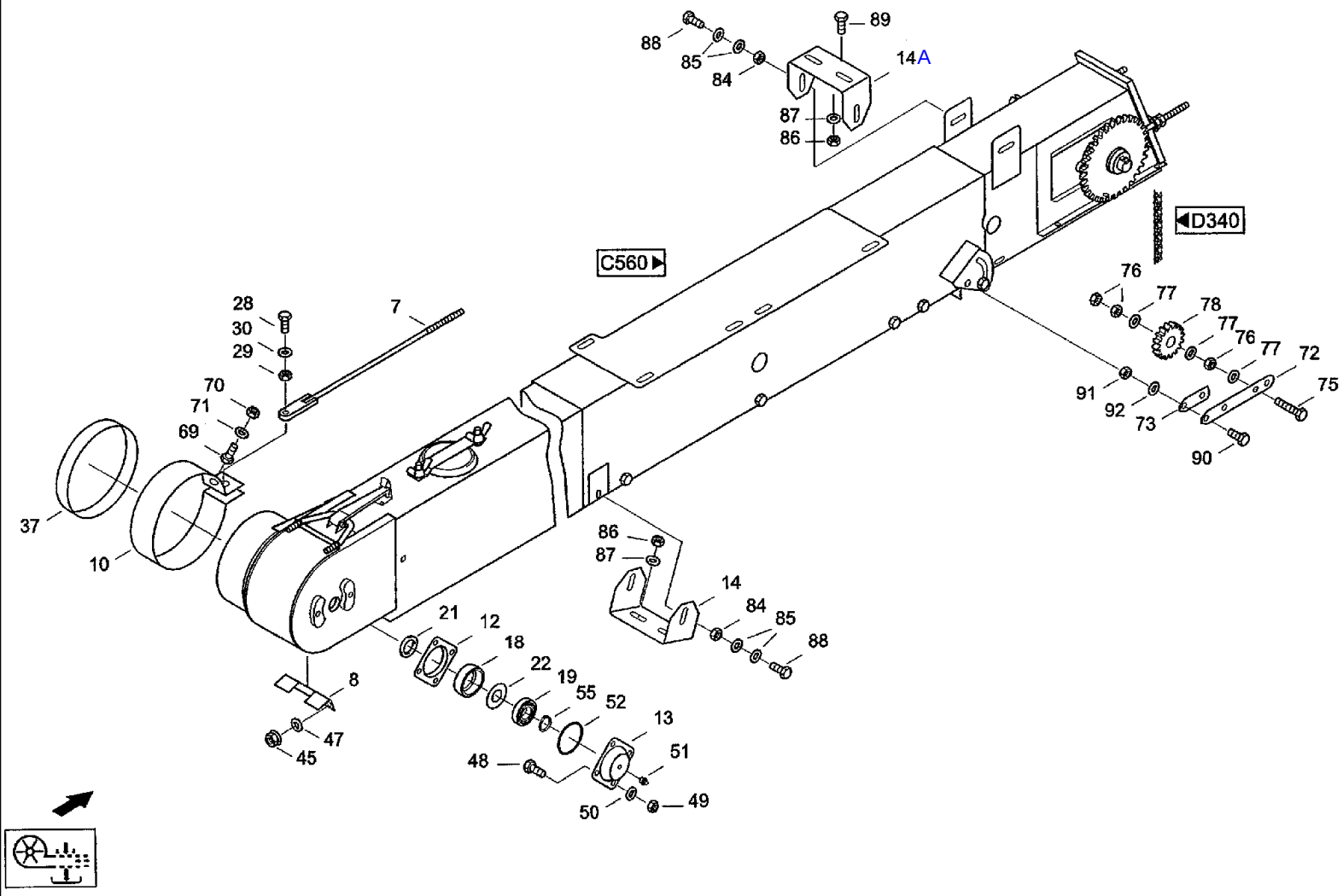

CF80 CASE IH CROSS FLOW COMBINE

C550(02) ADVANCEMENT- EAR ELEVATOR ASSEMBLY, VARIOUS COMPONENTS

Ref	Part Number	Qty	Description
37	020927316	1	GASKET, Seal DURCHM.175+/-2x30x2 GUMMI VU
38	614-8016	6	BOLT, Hex, M8 x 16, 8.8,
39	825-1408	8	NUT, M8, Cl 8,
41	06577028	14	WASHER, SPECIAL, Locking washer M8
42	31286853	1	WASHER, Washer c055-20.00.001 шайба
43	97012032	1	NUT, Hex nut M10DIN9858
45	006109621	2	NUT, Verbus hex nut W193.1-M8 10
47	060029392	2	WASHER, Washer 17x8,3x2,5
48	614-10020	4	BOLT, Hex, M10 x 20, 8.8, Full Thd,
49	825-1410	4	NUT, M10, Cl 8,
50	06501428	4	WASHER, SPRING, Wave washer spring B10 DIN137 FST
51	03617056	1	NIPPLE, LUBE, Grease nippel AM8x1 DIN71412
52	060049886	1	O-RING, Ring 56x4 NBR70 524-51301:045 кольцо круглого сечения
55	800-1125	1	RING, SNAP, M25, Ext, Snap ring 25x1,2DIN471 FST
58	825-1410	2	NUT, M10, Cl 8,
59	06577003	2	WASHER, SPECIAL, Locking washer M10
63	060526904	1	KEY, Gib-head key 8x7x28 DIN6887
66	825-1406	2	NUT, M6, Cl 8,
67	06577124	2	WASHER, Locking washer B6
69	614-6016	1	BOLT, Hex, M6 x 16, 8.8,
70	825-1406	1	NUT, M6, Cl 8,
71	06577124	1	WASHER, Locking washer B6
72	31287854	1	LEVER, Tensioning lever c055-30.00.002 зажимной рычаг
73	31289300	2	BLOCK, Shim c055-30.00.003 прокладка
75	614-12050	1	BOLT, Hex, M12 x 50, 8.8, Full Thd, Hex bolt M12x50ISO40178.8

CF80 CASE IH CROSS FLOW COMBINE

C550(03) ADVANCEMENT- EAR ELEVATOR ASSEMBLY, VARIOUS COMPONENTS

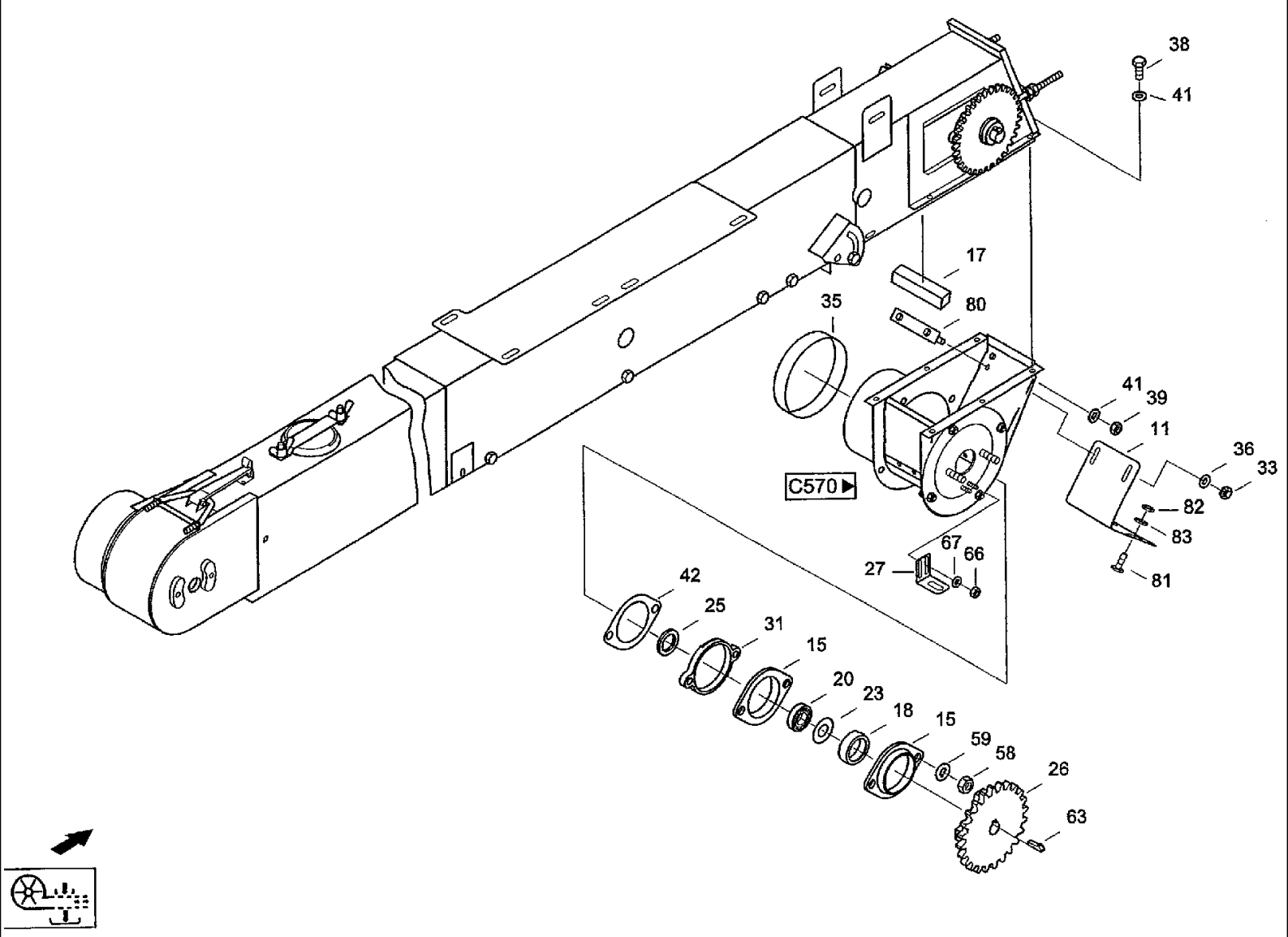

CF80 CASE IH CROSS FLOW COMBINE

C550(03) ADVANCEMENT- EAR ELEVATOR ASSEMBLY, VARIOUS COMPONENTS

Ref	Part Number	Qty	Description
76	825-1412	3	NUT, M12, Cl 8, Hex nut M12 ISO4032 8
77	06577011	3	PLATE, LOCKING, Locking washer M12
78	060501961	1	DRIVE SPROCKET, Sprocket TYP-N3/4ZOLL-12-ART. c055-30.00.001 звездочка
80	31317041	1	PLATE, Plate c055-20.30.000 пластина
81	614-10025	2	BOLT, Hex, M10 x 25, 8.8, Full Thd, Hex bolt M10x25ISO40178.8
82	825-1410	2	NUT, M10, Cl 8,
83	06577052	4	WASHER, SPECIAL, Locking washer B10
84	825-1410	4	NUT, M10, Cl 8,
85	06577052	8	WASHER, SPECIAL, Locking washer B10
86	825-1410	4	NUT, M10, Cl 8,
87	06577052	4	WASHER, SPECIAL, Locking washer B10
88	614-10025	4	BOLT, Hex, M10 x 25, 8.8, Full Thd, Hex bolt M10x25ISO40178.8
89	614-10060	2	BOLT, Hex, M10 x 60, 8.8, Full Thd, Hex bolt M10x60 ISO4017 8.8
90	614-12045	2	BOLT, Hex, M12 x 45, 8.8, Hex bolt M12X45 IS04017 8.8
91	825-1412	2	NUT, M12, Cl 8, Hex nut M12 ISO4032 8
92	06577060	2	WASHER, Locking washer B12
14A		1	СКОБА c055-00.00.002

C560(01) ADVANCEMENT- EAR ELEVATOR ASSEMBLY

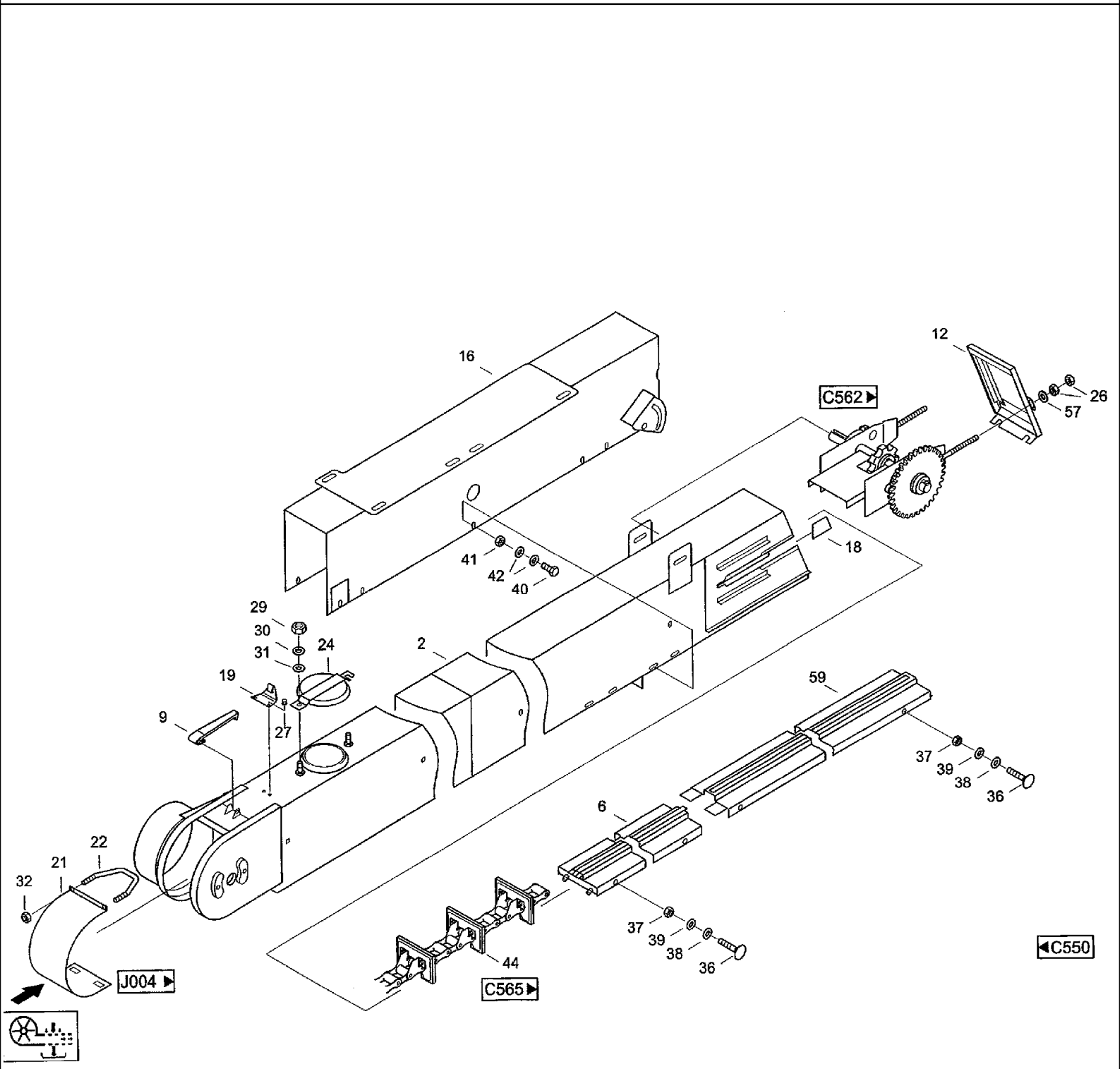

CF80 CASE IH CROSS FLOW COMBINE

C560(01) ADVANCEMENT- EAR ELEVATOR ASSEMBLY

Ref	Part Number	Qty	Description
2	061072072	1	HOUSING, Feeder c055-10.10.000 канал
6	060054336	1	RAIL, Guide rail UNTEN 524-51706:000 направляющая планка
9	060029825	1	LEVER, ASSY AND KNOB, Hand lever
12	31289108	1	SUPPORT, Cap 524-51701:012/02 крышка
16	061075114	1	HOLDER, Support ANTRIEBE c055-10.20.000 держатель
18	020267090	2	COVER, PROTECTIVE, Cover 5550-6200:018/04 покрытие
19	060029720	1	SPRING, Spring
21	060054481	1	FLAP, Door 524-51701:021/03 заслонка
22	060029800	1	BOW, Bracket 524-51401:025/04 скоба
24	060028978	1	COVER, Cap 524-51408:000/03 крышка
26	825-1410	4	NUT, M10, Cl 8,
27	003783286	2	RIVET, Rivet A4x6 DIN7337 CU-ST
29	832-10408	2	NUT, M8 x 1.25, Cl 8, Hex nut M8 DIN982 8
30	060029392	2	WASHER, Washer 17x8,3x2,5
31	06577028	2	WASHER, SPECIAL, Locking washer M8
32	832-10408	2	NUT, M8 x 1.25, Cl 8, Hex nut M8 DIN982 8
36	007755061	5	SCREW, Flat-round-head screw M8x140DIN6034.6
37	825-1408	5	NUT, M8, Cl 8,
38	895-25008	5	WASHER, M8 x 20 x 1.6, Washer 8,4 DIN9021 140HV
39	06577028	5	WASHER, SPECIAL, Locking washer M8
40	614-8025	4	BOLT, Hex, M8 x 25, 8.8,
41	825-1408	4	NUT, M8, Cl 8,
42	06577028	8	WASHER, SPECIAL, Locking washer M8
44	31317105	1	CHAIN, ELEVATOR, Elevator chain 149GL. C055-10.50.000 Транспортер элеватора
57	06577052	2	WASHER, SPECIAL, Locking washer B10

CF80 CASE IH CROSS FLOW COMBINE

C560(02) ADVANCEMENT- EAR ELEVATOR ASSEMBLY

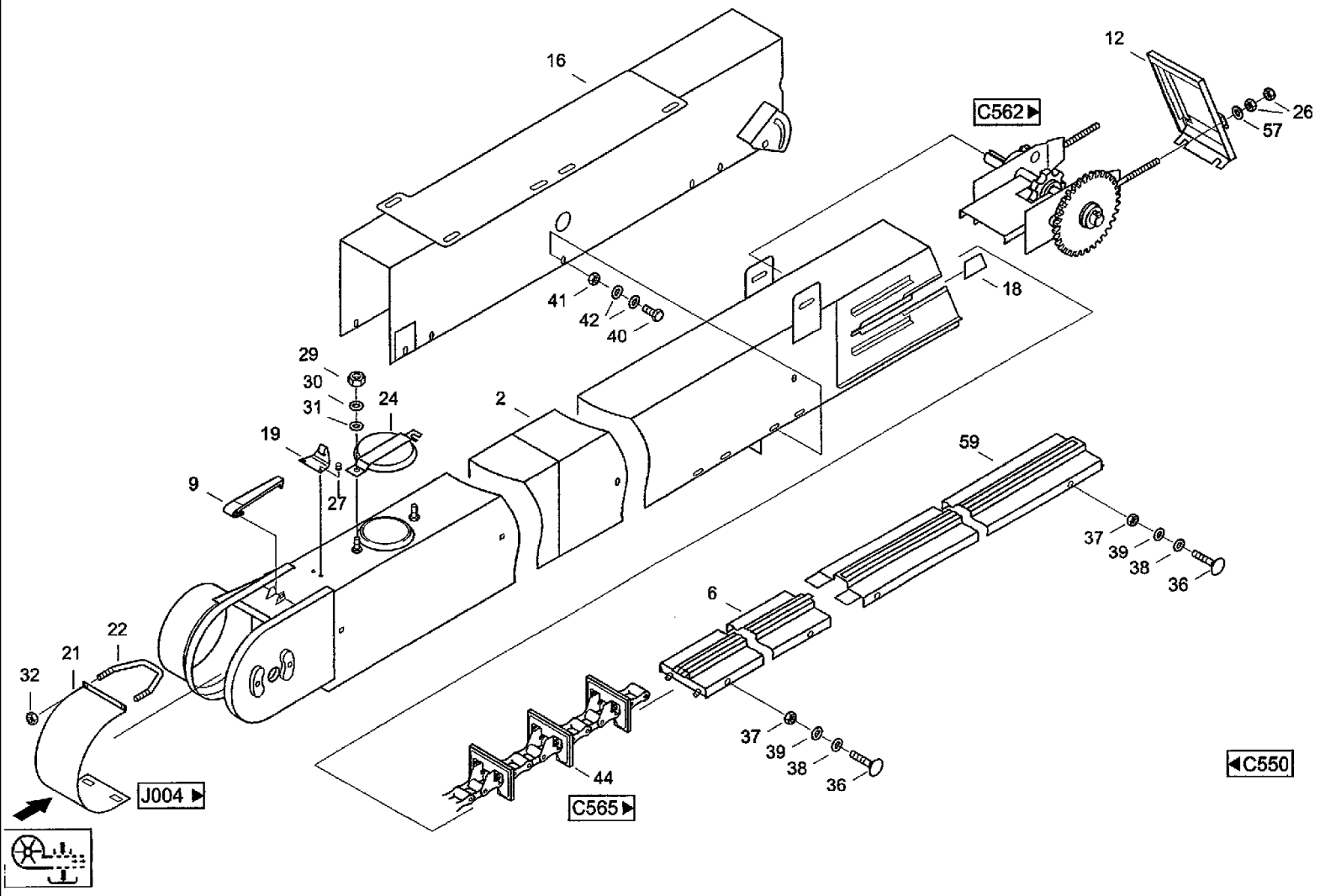

CF80 CASE IH CROSS FLOW COMBINE

C560(02) ADVANCEMENT- EAR ELEVATOR ASSEMBLY

Ref	Part Number	Qty	Description
59	061075034	OBENRAIL, Guide rail	c055-10.30.000 направляющая планка

CF80 CASE IH CROSS FLOW COMBINE

C562 ADVANCEMENT- BEARING

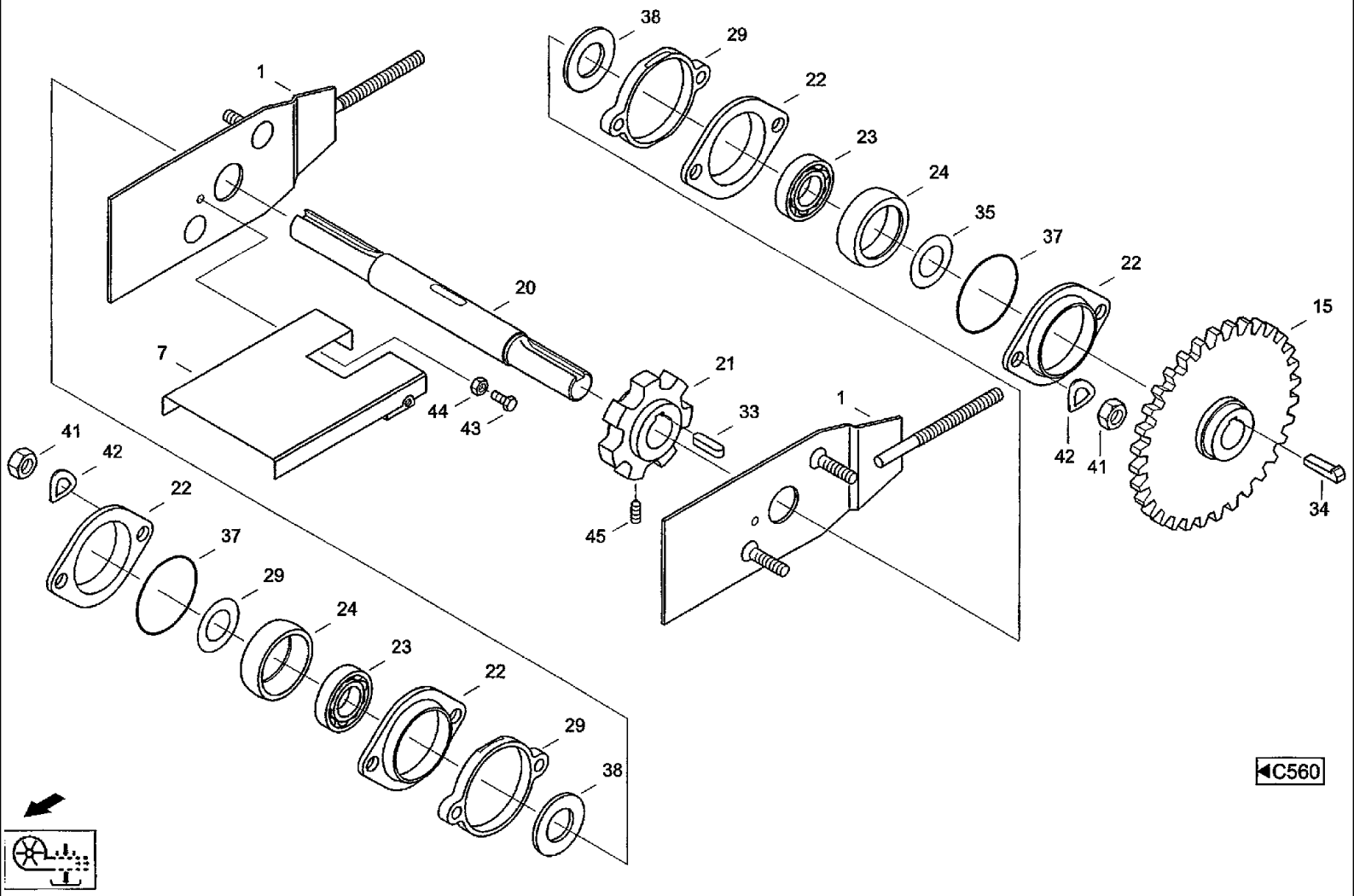

CF80 CASE IH CROSS FLOW COMBINE

C562 ADVANCEMENT- BEARING

Ref	Part Number	Qty	Description
1	060052447	2	SPOOL, Spool 524-51705:001/04 задвижка
7	020222761	1	PLATE, LARGE, Rail head 5550-6202:007/04 головка направляющей
15	31297487	1	DRIVE SPROCKET, Sprocket 27Z c050-10.40.001 звездочка
20	060168304	1	SHAFT, DRIVE, Drive shaft 52451705:020/03 приводной вал
21	020935830	1	DRIVE SPROCKET, Sprocket RZ 021 01 2333 5550-6002:012 звездочка
22	020221510	4	BEARING LINER, Bearing housing 5550-6000:031/04 вкладыш
23	03651058	2	BEARING, Grooved ball bearing 6205-2RS DIN625
24	020221543	2	BUSHING, LARGE, Intaking ring 5550-6000:039/14 корпус подшипника
29	060054498	2	SPACER, Spacer ring 524-51705:029/04 распорное кольцо
33	03501205	1	KEY, BUCKET TOOTHRT, Flat key A8x7x36 DIN6885 шпонка
34	003506388	1	KEY, Gib-head key 8x7x32 DIN6887 9965955340 шпонка
35	020086414	2	SEAL WASHER, Seal ring 25,2x51x0,2 5247-0501:0501:045/04 уплотнительная шайба
37	060049886	2	O-RING, Ring 56x4 NBR70 524-51301:045/04 кольцо круглого сечения
38	060052502	2	GASKET, Seal 5550-6200:025/04 уплотнительная шайба
41	825-1410	4	NUT, M10, Cl 8,
42	06501428	4	WASHER, SPRING, Wave washer spring B10DIN137FST
43	614-6035	2	BOLT, Hex, M6 x 35, 8.8, Full Thd, Bolt, Hex, M6 x 35, 8.8, Full Thd, ISO4017
44	825-1406	2	NUT, M6, Cl 8,
45	060512378	1	PIN, Threaded pin M8x16 ISO4027 45H

C565 ADVANCEMENT- ELEVATOR CHAIN, EAR ELEVATOR ASSEMBLY

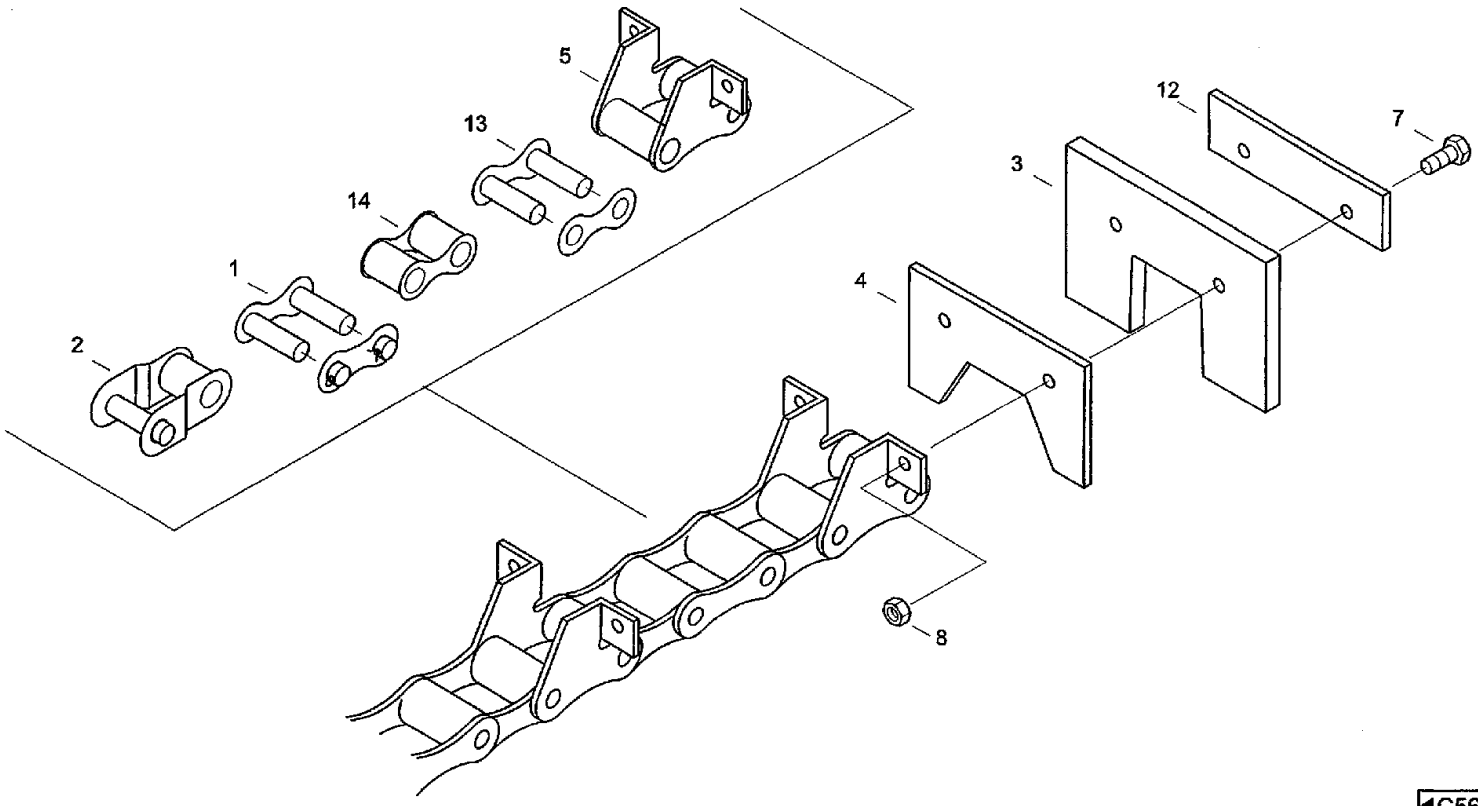

C560

CF80 CASE IH CROSS FLOW COMBINE

C565 ADVANCEMENT- ELEVATOR CHAIN, EAR ELEVATOR ASSEMBLY

Ref	Part Number	Qty	Description
1	003782500		LINK, CHAIN, Coupling joint
2	003782517	1	FITTING, Link 55V41.4-GEKROPFT
3	31315554	37	DRIVE DOG, Follower 5550-6203:007/04 лопатка
4	31315562	37	BLOCK, Shim 5550-6203:003/04 прокладка
5	31327131	1	LINK, CHAIN, External link 55V-41.4 M.SD-LASCHE DURCHM
8	06116026	74	NUT, Hex nut M8 DIN6925 10
12	31317082	37	BLOCK, Shim 524-51403:002/04 прокладка
13	31327115	1	LINK, External link 55V-41.4
14	31327123	1	LINK, CHAIN, Internal link 55V-41.4
7	627-8030	74	BOLT, Hex, M8 x 30, 10.9, Hex bolt M8x30 ISO4017 10.9

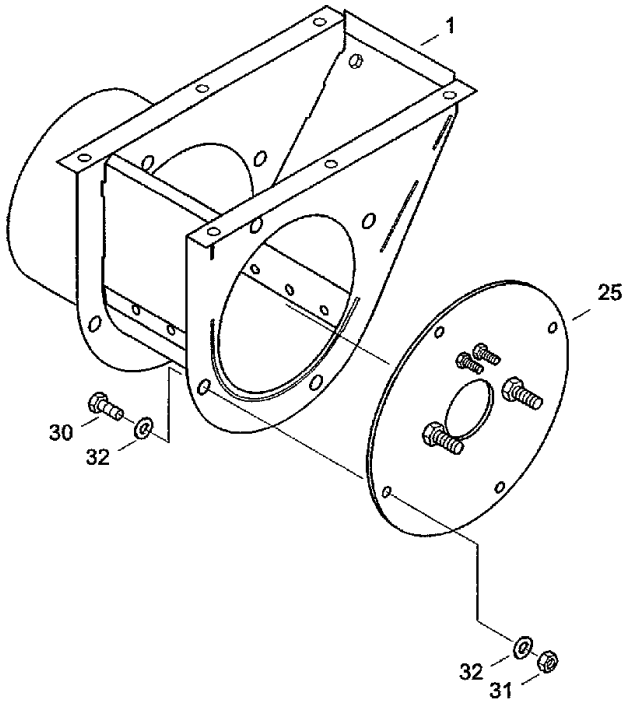

C550

CF80 CASE IH CROSS FLOW COMBINE

C570 ADVANCEMENT- DISCHARGE HEAD

Ref	Part Number	Qty	Description
1	31286933	1	HEAD ELECTRIC, Discharge head c055-20.10.000 головка выбрасывающая
25	31287380	1	COVER, Bearing cover c055-20.20.000 крышка подшипника
30	614-8020	4	BOLT, Hex, M8 x 20, 8.8, Hex bolt M8X20IS040178.8
31	825-1408	4	NUT, M8, Cl 8,
32	06577044	8	WASHER, SPECIAL, Locking washer

CF80 CASE IH CROSS FLOW COMBINE

C620 ADVANCEMENT- EAR AUGER, TOP, VARIOUS COMPONENTS

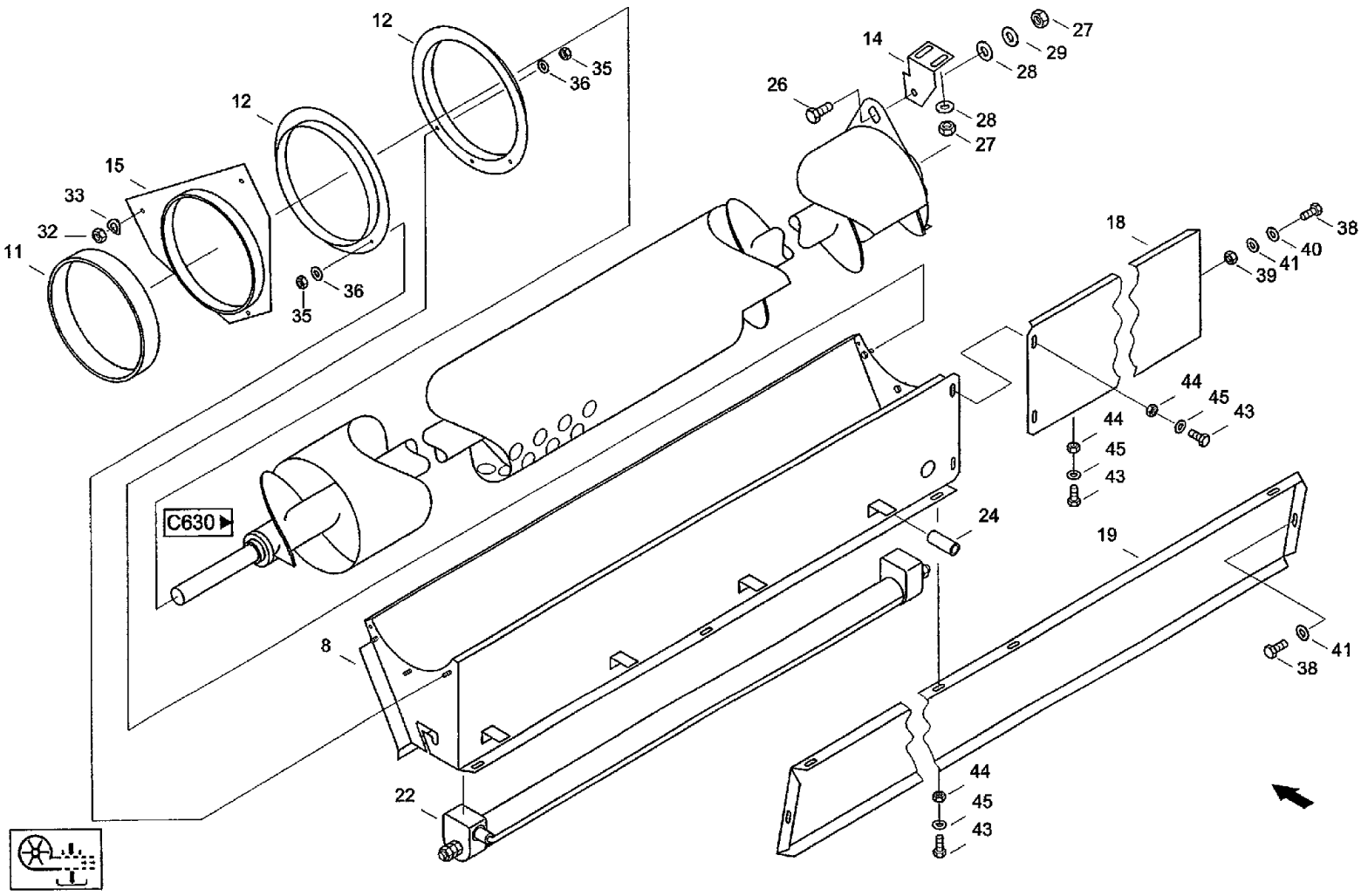

CF80 CASE IH CROSS FLOW COMBINE

C620 ADVANCEMENT- EAR AUGER, TOP, VARIOUS COMPONENTS

Ref	Part Number	Qty	Description
8	061080458		CASE, Sensor housing 1
11	060182800		GASKET, Seal DURCHM. 160x30x2 mm GUMMI VU 1
12	061022504	2	RING, Pipe ring
14	060052551	1	ANGLE BAR, Angle 524-52200:006 уголок
15	060052568	1	FLANGE ASSY, Pipe flange 524-52200:007/03 фланец
18	061080490	1	PLATE, Panel
19	061080505	1	PLATE, Cover plate
22	07080703	1	POINTER, Pipe sensor
24	020513827	4	SLEEVE, Sleeve
26	614-8020	1	BOLT, Hex, M8 x 20, 8.8, Hex bolt M8X20ISO40178.8
27	825-1408	3	NUT, M8, Cl 8,
28	895-11008	3	WASHER, M8 x 16 x 1.6, Washer 8,4 DIN125 ST
29	895-25008	1	WASHER, M8 x 20 x 1.6, Washer
32	825-1408	3	NUT, M8, Cl 8,
33	06501380	3	WASHER, CUP, Wave washer spring B8DIN137FST
35	825-1406	6	NUT, M6, Cl 8,
36	06577036	6	WASHER, SPECIAL, Locking washer M6
38	614-8020	3	BOLT, Hex, M8 x 20, 8.8, Hex bolt M8X20ISO40178.8
39	825-1408	1	NUT, M8, Cl 8,
40	895-11008	2	WASHER, M8 x 16 x 1.6, Washer 8,4 DIN125 ST
41	06577028	3	WASHER, SPECIAL, Locking washer M8
43	614-6012	7	BOLT, Hex, M6 x 12, 8.8, Hex bolt M6X12IS040178.8
44	825-1406	7	NUT, M6, Cl 8,
45	06577036	7	WASHER, SPECIAL, Locking washer

C630 ADVANCEMENT- EAR AUGER, TOP

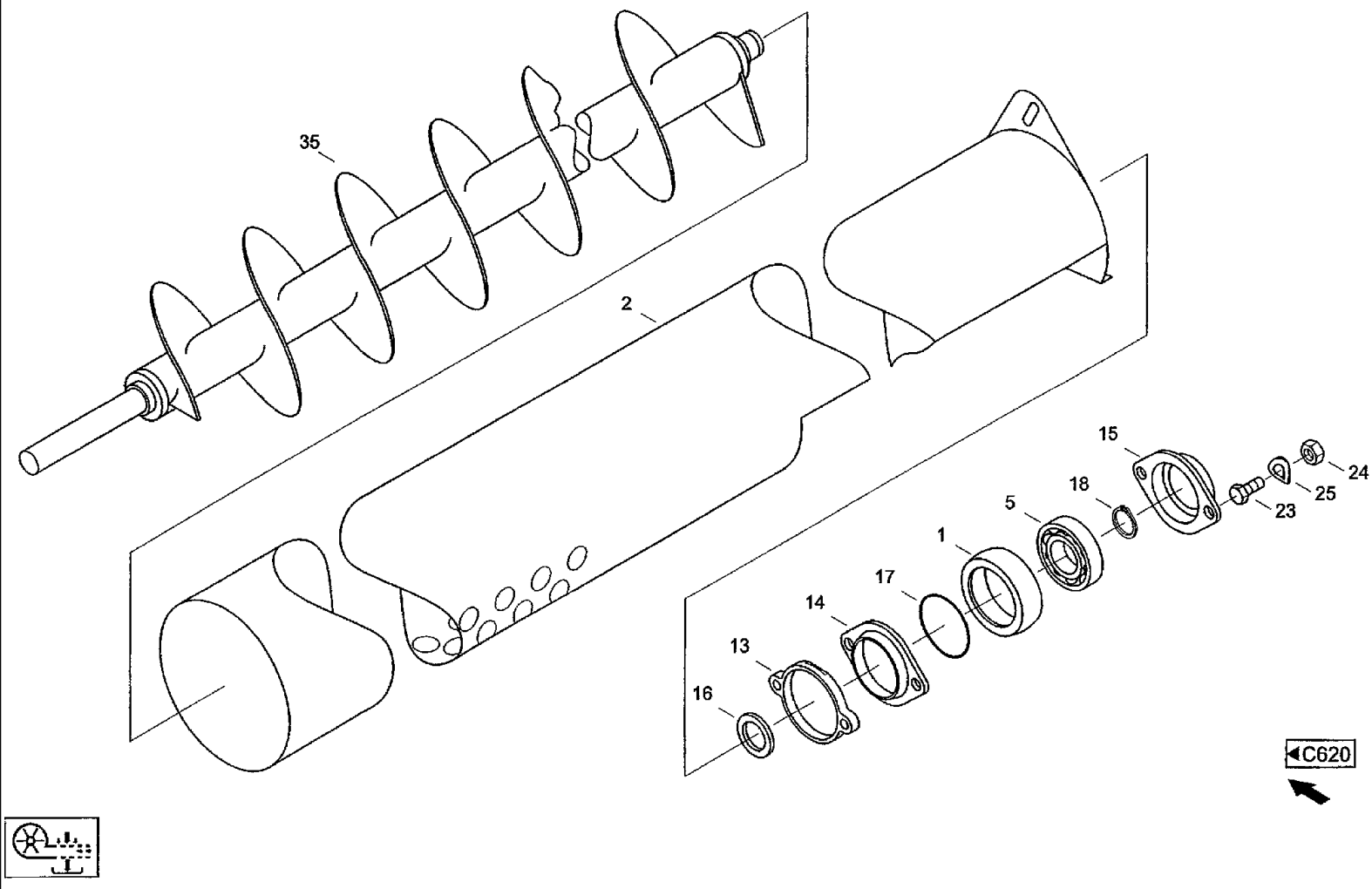

CF80 CASE IH CROSS FLOW COMBINE

C630 ADVANCEMENT- EAR AUGER, TOP

Ref	Part Number	Qty	Description
1	020221543	1	BUSHING, LARGE, Intaking ring 5550-6000:039/04 корпус подшипника
2	061080425	1	TUBE, Auger tube c063-00.03.000 труба шнека
5	03652034	1	BEARING, Grooved ball bearing 6205-RS DIN625
13	060054498	1	SPACER, Spacer ring 524-51705:029/04 распорное кольцо
14	020221510	1	BEARING LINER, Bearing housing 5550-6000:031/04 вкладыш подшипника
15	020221527	1	BEARING LINER, Bearing housing c063-00.15.000 вкладыш подшипника
16	060029095	1	GASKET, Seal 524-51400:008/04 уплотнительное кольцо
17	060049886	1	O-RING, Ring 56x4 NBR70 524-51301:045/04 кольцо круглого сечения
18	800-1125	1	RING, SNAP, M25, Ext, Snap ring 25x1,2DIN471 FST
23	614-10030	2	BOLT, Hex, M10 x 30, 8.8,
24	825-1410	2	NUT, M10, Cl 8,
25	06501428	2	WASHER, SPRING, Wave washer spring B10 DIN 137 FST
35	061017330	1	WORM, Ear auger c063-00.01.000 шнек

C650(01) ADVANCEMENT- GRAIN ELEVATOR, VARIOUS COMPONENTS

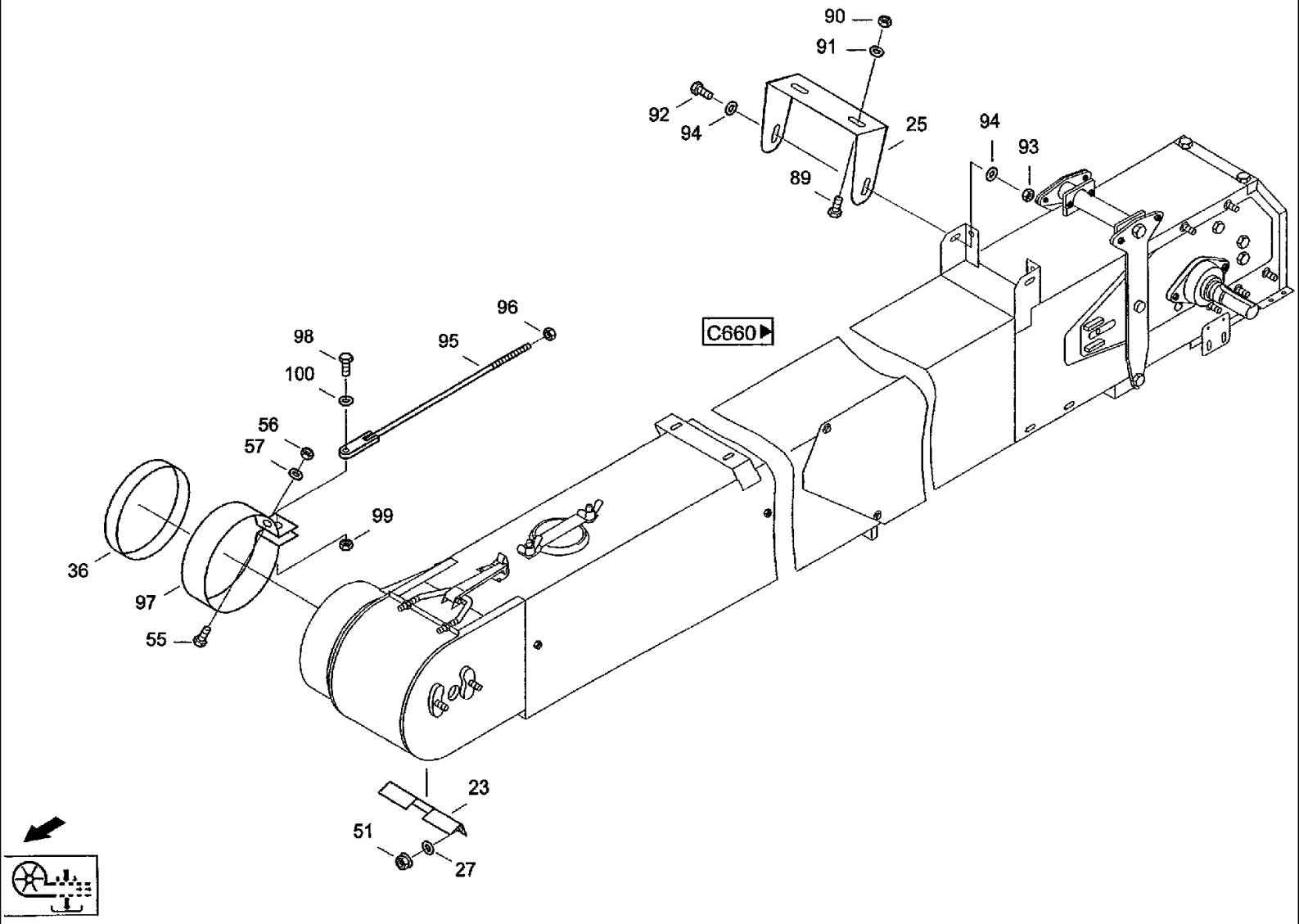

CF80 CASE IH CROSS FLOW COMBINE

C650(01) ADVANCEMENT- GRAIN ELEVATOR, VARIOUS COMPONENTS

Ref	Part Number	Qty	Description
1	020221543	1	BUSHING, LARGE, Intaking ring 5550-6000:039 корпус подшипника
2	060113741	1	GROOVED PULLEY, V-belt pulley RZ 0601681 85 c065-18.00.001 шкив
5	962-8025	4	SCREW, Hex Soc Hd, M8 x 25, 10.9, Cheese-head screw M8x25 DIN912 10.9
6	892-11008	4	WASHER, LOCK, M8, Spring washer
7	006137055	2	PIN, Notched dowel 8x20-ST DIN1472
23	060112990	1	GUIDE, Guide c065-14.00.004 направляющая
25	31328198	1	SUPPORT, Support
27	060029392	2	WASHER, Washer 17x8,3x2,5
28	060113018	1	STRIP, SEALING, Sealing strip
31	060049468	1	BEARING LINER, Bearing housing 524-51301:031/04 вкладыш подшипника
32	060049476	1	BEARING LINER, Bearing housing 524-51301:032/04 ВКЛАДЫШ ПОДШИПНИКА
34	060029087	1	SEAL WASHER, Seal ring 25,2x44x0,2 524-51400:008/04 уплотнительная шайба
35	060029095	1	GASKET, Seal 524-51400:007/04 уплотнительная шайба
36	020836514	1	GASKET, Seal
37	060049886	1	O-RING, Ring 56x4 NBR70 524-51301:045/04 кольцо круглого сечения
38	31329270	2	BLOCK, Shim
39	31339223	2	BLOCK, Shim
45	614-10016	2	BOLT, Hex, M10 x 16, 8.8, Full Thd, Hex bolt M10x16ISO40178.8
46	825-1410	4	NUT, M10, Cl 8,
47	06501428	4	WASHER, SPRING, Wave washer spring
49	800-1125	1	RING, SNAP, M25, Ext, Snap ring 25x1,2DIN471 FST
50	03617056	1	NIPPLE, LUBE, Grease nippel AM8x1 DIN71412
51	006109621	2	NUT, Verbus hex nut W193.1-M8 10
55	614-6016	1	BOLT, Hex, M6 x 16, 8.8,
56	825-1406	1	NUT, M6, Cl 8,

C650(02) ADVANCEMENT- GRAIN ELEVATOR, VARIOUS COMPONENTS

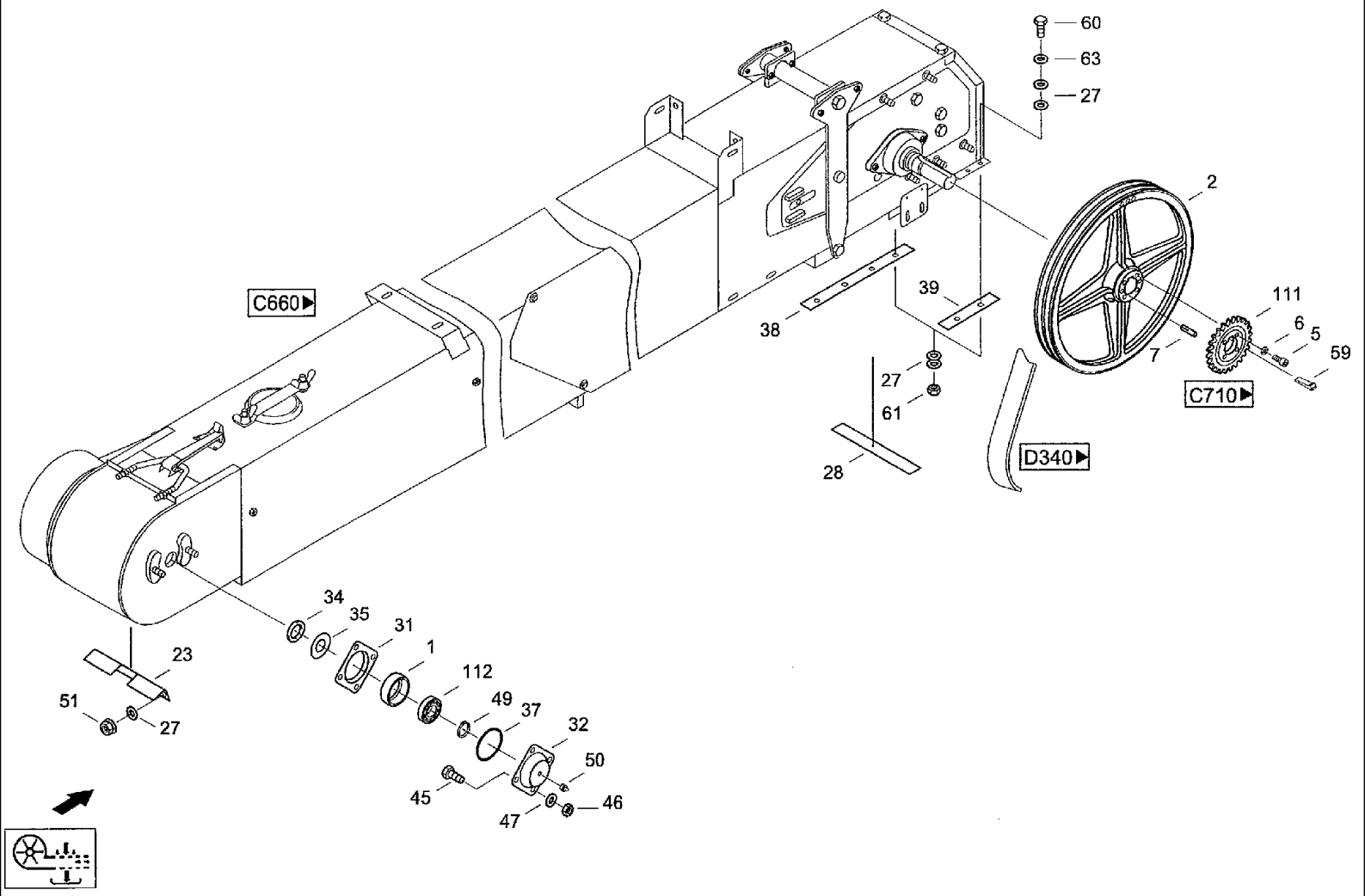

CF80 CASE IH CROSS FLOW COMBINE

C650(02) ADVANCEMENT- GRAIN ELEVATOR, VARIOUS COMPONENTS

Ref	Part Number	Qty	Description
57	06501397	1	WASHER, SPRING, Wave washer spring B6 DIN137 FST
59	003502392	1	KEY, Gib-head key 10x8x45 DIN6887 9965955293 шпонка
60	614-8025	8	BOLT, Hex, M8 x 25, 8.8,
61	825-1408	8	NUT, M8, Cl 8,
63	06577044	16	WASHER, SPECIAL, Locking washer B8
89	614-10030	2	BOLT, Hex, M10 x 30, 8.8,
90	825-1410	2	NUT, M10, Cl 8,
91	06577052	2	WASHER, SPECIAL, Locking washer B10
92	614-10025	2	BOLT, Hex, M10 x 25, 8.8, Full Thd, Hex bolt M10x25ISO40178.8
93	825-1410	2	NUT, M10, Cl 8,
94	06577052	4	WASHER, SPECIAL, Locking washer B10
95	072042490	1	STEM, Through bolt
96	832-10410	1	NUT, LOCK, M10 x 1.5, Cl 8,
97	072014614	1	SHIN, Clamp
98	614-10030	1	BOLT, Hex, M10 x 30, 8.8,
99	825-1410	1	NUT, M10, Cl 8,
100	06577003	1	WASHER, SPECIAL, Locking washer M10
111	060113733	1	SLEWING RING, Toothed rim c065-18.00.002 звездочка
112	97060305	1	BEARING, Grooved ball bearing 6205 DIN625 SKF/

C660(01) ADVANCEMENT- GRAIN ELEVATOR

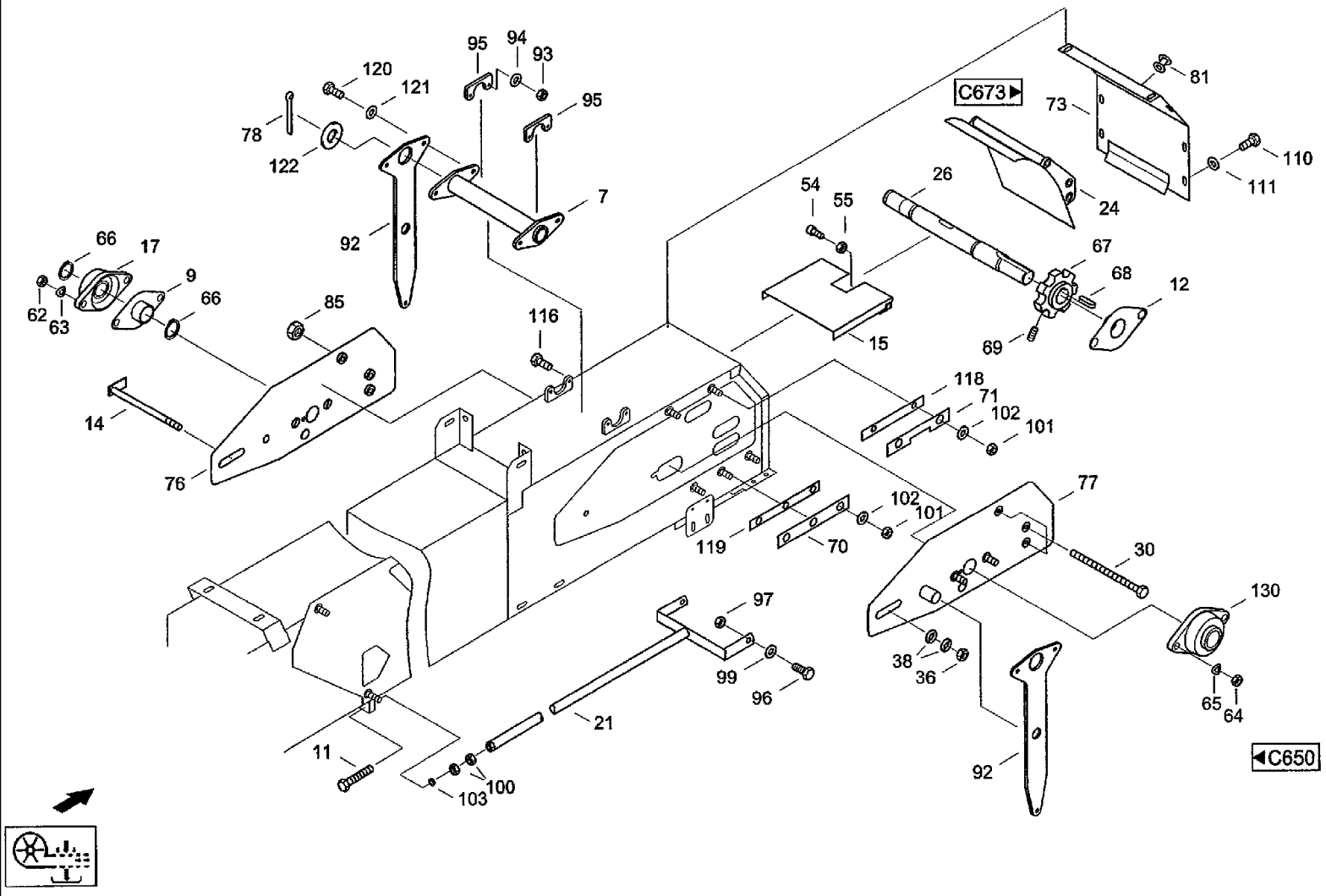

CF80 CASE IH CROSS FLOW COMBINE

C660(01) ADVANCEMENT- GRAIN ELEVATOR

Ref	Part Number	Qty	Description
2	31328173	1	HOUSING, Housing c065-11.00.000 корпус
4	31328036	1	RAIL, Guide rail u c065-13.00.000 шина напр. нижняя
5	31329262	1	CHAIN, ELEVATOR, Elevator chain 126GL C065-15.00.000 транспортер элеватора
7	31339168	1	TENSIONER, Chain tensoiner c065-12.02.000 натяжное устройство
8	060028978	1	COVER, Cap 524-51408:000/03 крышка
9	061002613	1	GASKET, Seal I c065-12.06.000 уплотнение
10	060113083	5	SCREW, Screw
11	31327968	1	STEM, Screw
12	061002621	1	GASKET, Seal r c065-12.05.000 уплотнение
14	31344261	1	TENSIONER, Through bolt c065-12.07.000 стержень
15	061025941	1	PLATE, LARGE, Rail head c065-12.10.000 головка шины
17	061002566	1	BEARING, Bearing I
18	31338271	1	PLATE, Plate CASE
19	060029825	1	LEVER, ASSY AND KNOB, Hand lever
20	060029720	1	SPRING, Spring
21	31327910	1	STEM, Adjusting spindle c065-12.01.000 установочный винт
23	060113067	1	FLAP, Door c065-10.00.001 колпак
24	31327517	1	DEFLECTOR, Guide plate c065-12.09.000 направляющая пластина
25	060029800	1	BOW, Bracket 524-51401:025/04 скоба
26	061002695	1	SHAFT, DRIVE, Drive shaft c065-12.00.007 вал приводной
27	060029392	2	WASHER, Washer 17x8,3x2,5
28	06501380	2	WASHER, CUP, Wave washer spring B8DIN137FST
29	832-10408	2	NUT, M8 x 1.25, Cl 8, Hex nut M8 DIN982 8
30	31327558	3	SET SCREW, Setscrew c065-12.08.000 установочный винт
33	825-1408	5	NUT, M8, Cl 8,

C660(02) ADVANCEMENT- GRAIN ELEVATOR

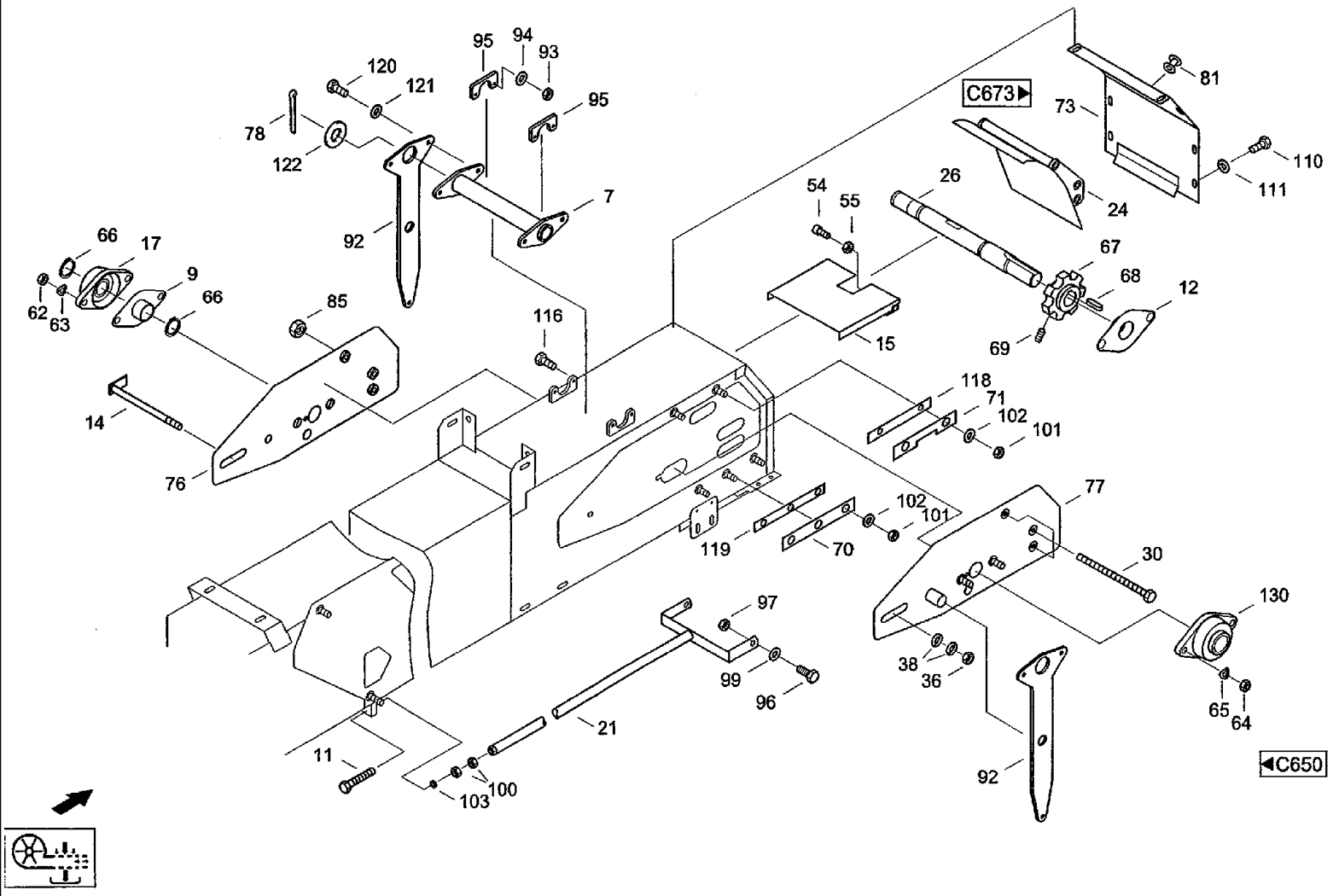

CF80 CASE IH CROSS FLOW COMBINE

C660(02) ADVANCEMENT- GRAIN ELEVATOR

Ref	Part Number	Qty	Description
34	06577044	10	WASHER, SPECIAL, Locking washer B8
36	006269000	1	NUT, Hex nut M10DIN6924SW16-8
38	021426257	2	WASHER, Washer MDW-N14510-11x32x 4-RST
48	003783286	2	RIVET, Rivet A4x6 DIN7337 CU-ST
54	864-8035	2	SCREW, Hex Soc Hd, M8 x 35, 8.8, Cheese-head screw M8x35DIN9128.8
55	825-1408	2	NUT, M8, Cl 8,
62	825-1410	2	NUT, M10, Cl 8,
63	06501428	2	WASHER, SPRING, Wave washer spring B10DIN137FST
64	825-1412	2	NUT, M12, Cl 8, Hex nut M12ISO40328T
65	97022151	2	WASHER, SPRING, Wave washer spring B12 DIN137 FST
66	800-1130	2	RING, SNAP, M30, Ext, Snap ring 30x1,5DIN471 FST
67	021012390	1	DRIVE SPROCKET, Sprocket RZ 02 101 2333 524-51401:023/01 звездочка
68	03501342	1	KEY, BUCKET TOOTHRT, Flat key A1 0x8x36 DIN6885
69	060512378	1	PIN, Threaded pin M8X16IS0402745H
70	31327984	2	BAR, Guide rail 0
71	31327992	2	BAR, Guide rail u
73	31328157	1	COVER, Cap
76	31327822	1	SLIDER, Spool l
77	31327830	1	SLIDER, Spool r
78	06403073	1	PIN, SPLIT (COTTER), Splint pin 6,3x63 DIN94 ST
79	31337061	1	PLATE, Support plate LH
81	01147568	1	GROMMET, Grommet A8x2,5
85	06116050	3	NUT, Hex nut M12 DIN6925 8
92	31339151	2	TENSIONER, Clamping plate
93	825-1410	4	NUT, M10, Cl 8,

C660(03) ADVANCEMENT- GRAIN ELEVATOR

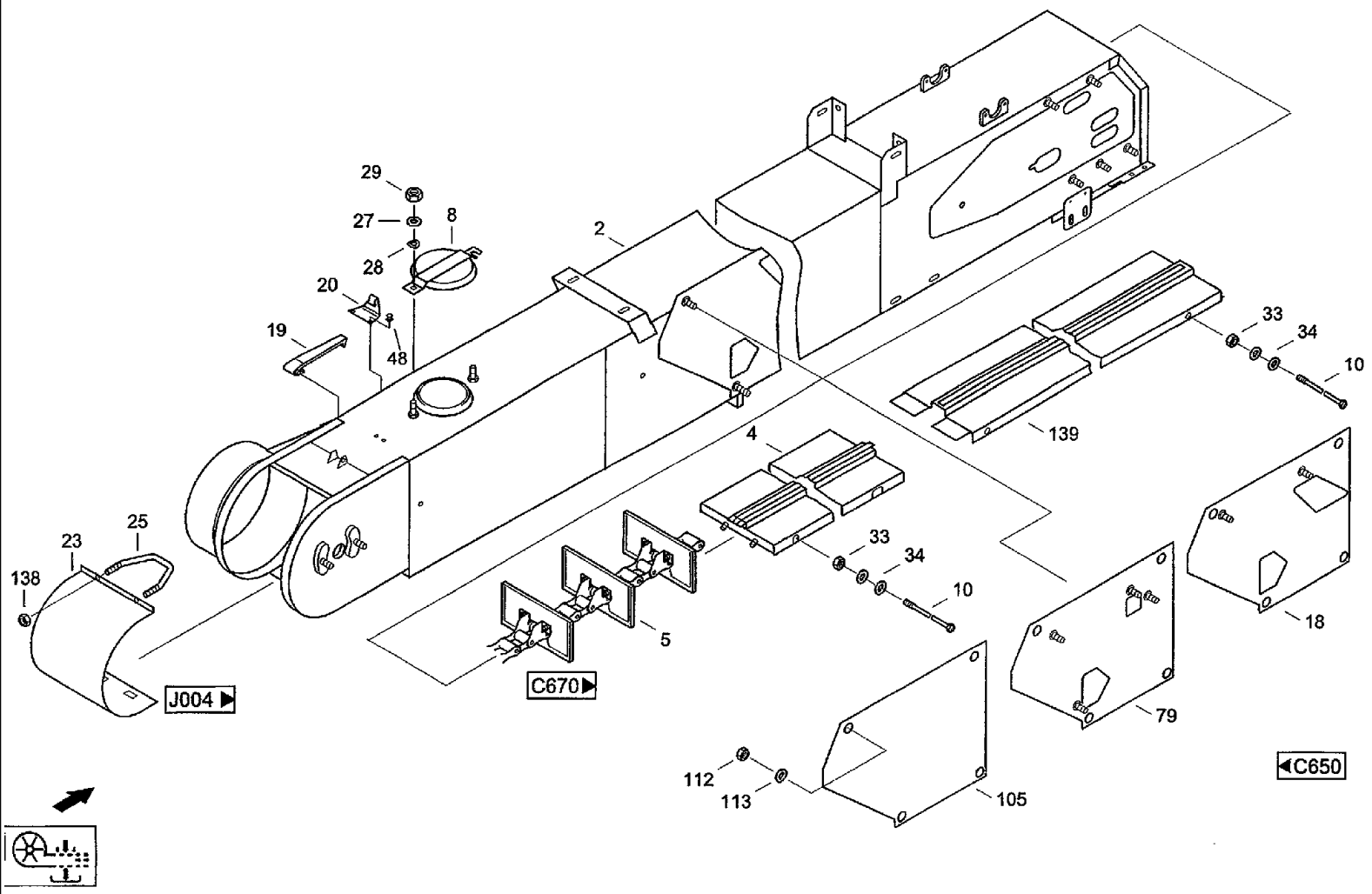

CF80 CASE IH CROSS FLOW COMBINE

C660(03) ADVANCEMENT- GRAIN ELEVATOR

Ref	Part Number	Qty	Description
94	06577052	4	WASHER, SPECIAL, Locking washer B10
95	31323931	2	CLASP, Rubber lug
96	614-12050	2	BOLT, Hex, M12 x 50, 8.8, Full Thd, Hex bolt M12x50 IS04017 8.8
97	825-1412	4	NUT, M12, Cl 8, Hex nut M12ISO40328
99	06577060	4	WASHER, Locking washer B12
100	829-1420	2	NUT, M20, Cl 10, Nut, M20, Cl 10
101	825-1408	10	NUT, M8, Cl 8,
102	06577044	10	WASHER, SPECIAL, Locking washer B8
103	31329568	1	SLEEVE, Sleeve
105	31328140	1	COVER, Cap TRAGERPLATTE AFS
110	614-8020	8	BOLT, Hex, M8 x 20, 8.8, Hex bolt M8x20IS040178.8
111	06577028	8	WASHER, SPECIAL, Locking washer M8
112	825-1406	4	NUT, M6, Cl 8,
113	06577124	4	WASHER, Locking washer B6
116	614-10035	4	SCREW, Hex, M10 x 35, 8.8, Full Thd,
118	31329584	2	BLOCK, Shim
119	31329592	2	BLOCK, Shim
120	614-10018	4	BOLT, Hex, M10 x 18, 8.8, Full Thd, Hex bolt M10x18 ISO4017 8.8
121	06577003	4	WASHER, SPECIAL, Locking washer M10
122	03269421	1	DISC, Washer A25 DIN125 140HV
130	061002558	1	BEARING, Bearing r
138	832-10408	2	NUT, M8 x 1.25, Cl 8, Hex nut M8 DIN982 8
139	31328060	1	RAIL, Guide rail 0

c065-14.00.000 шина напр. верхняя

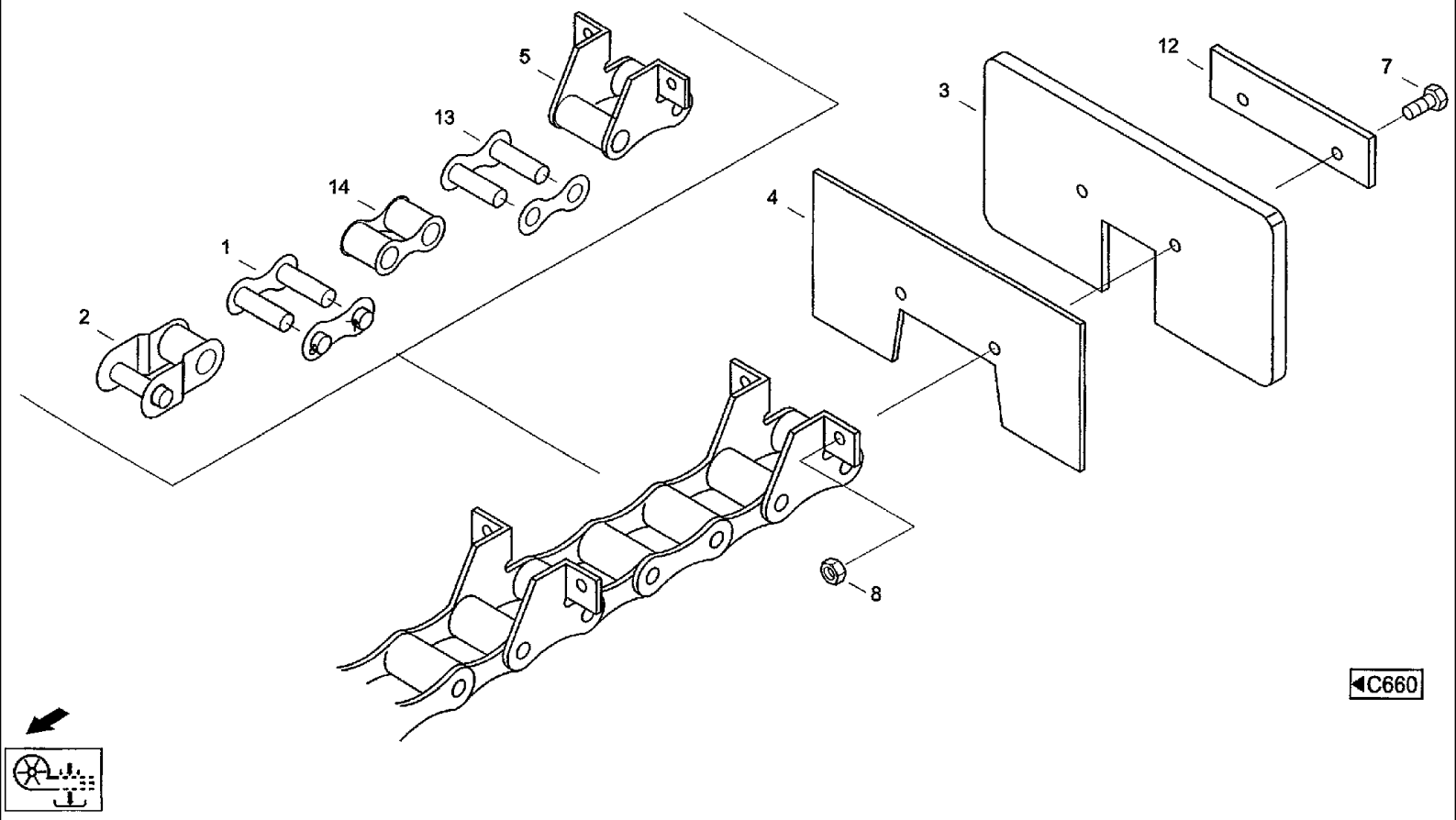
5
13
14
1
2
12
7
3
4
8
C660

CF80 CASE IH CROSS FLOW COMBINE

C670 ADVANCEMENT- ELEVATOR CHAIN ТРАНСПОРТЕР ЭЛЕВАТОРА C065-15.00.000

Ref	Part Number	Qty	Description
1	003782500	1	LINK, CHAIN, Coupling joint 55V-41.4
2	003782517	1	FITTING, Link 55V41.4-GEKROPFT
3	31317033	31	DRIVE DOG, Follower c065-15.00.001 лопатка
4	31317090	31	BLOCK, Shim c065-15.00.002 подкладка
5	31327131	1	LINK, CHAIN, External link 55V-41.4 M.SD-LASCHE DURCHM
8	06116026	62	NUT, Hex nut M8DIN692510
12	31317082	31	BLOCK, Shim c065-15.00.003 пластина
13	31327115	1	LINK, External link 55V-41.4
14	31327123	1	LINK, CHAIN, Internal link 55V-41.4
7	627-8030	62	BOLT, Hex, M8 x 30, 10.9, Hex bolt M8x30ISO401710.9

C673 ADVANCEMENT- SUPPORT

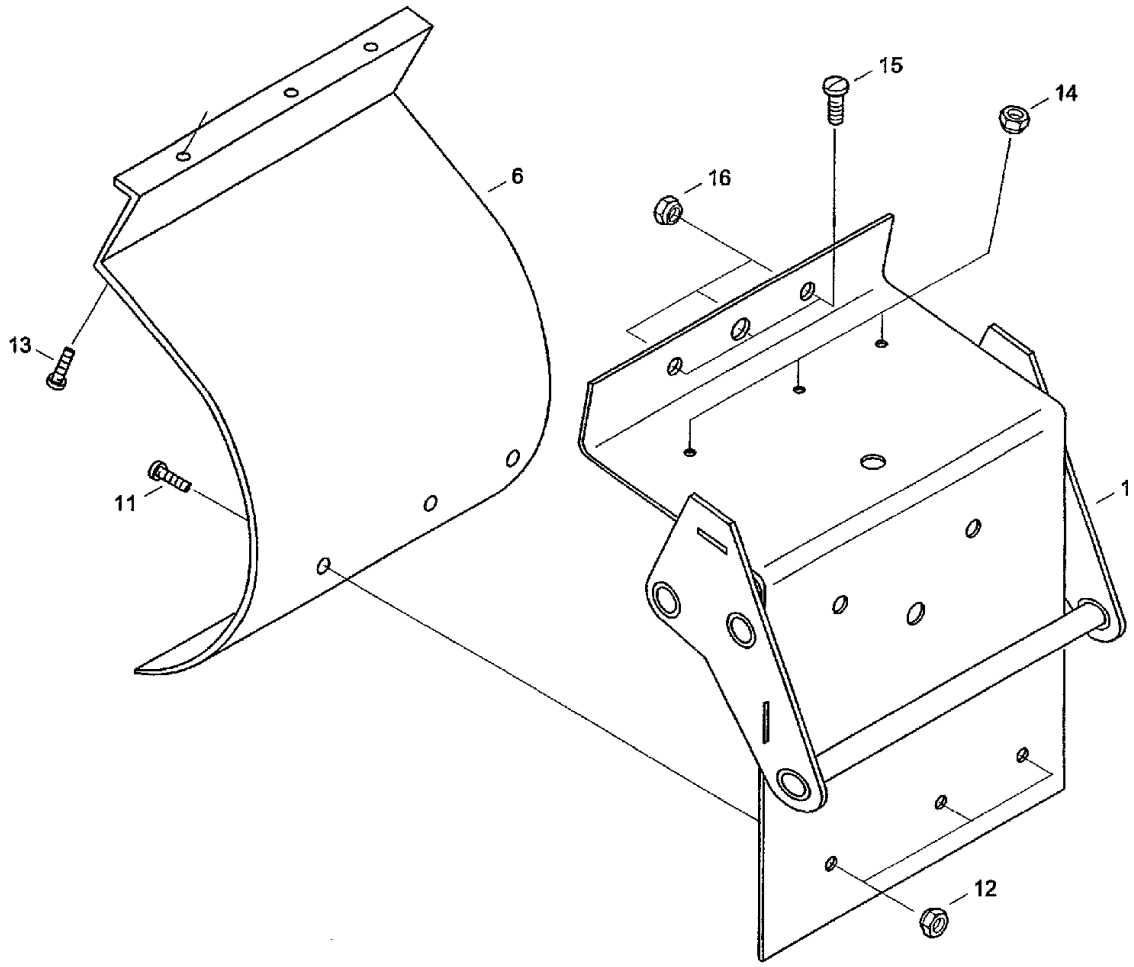

◄C660

CF80 CASE IH CROSS FLOW COMBINE

C673 ADVANCEMENT- SUPPORT

Ref	Part Number	Qty	Description
1	31328028	1	HOLDER, Support AfsVM
6	31327445	1	DEFLECTOR, Guide plate
11	97001889	3	SCREW, Fillister head screw M8x25 ISO7380 8.8
12	832-10408	3	NUT, M8 x 1.25, Cl 8, Hex nut M8 DIN982 8
13	06019435	3	SCREW, Fillister head screw M6x20 ISO7380 8.8
14	832-10406	3	NUT, M6 x 1, Cl 8, Hex nut M6 DIN982 8
15	06052854	2	SCREW, Fillister head screw M1 0x30 ISO7380 10.9
16	832-10410	2	NUT, LOCK, M10 x 1.5, Cl 8,

C710(01) ADVANCEMENT- TANK FILL. SCREW, VARIOUS COMPONENTS

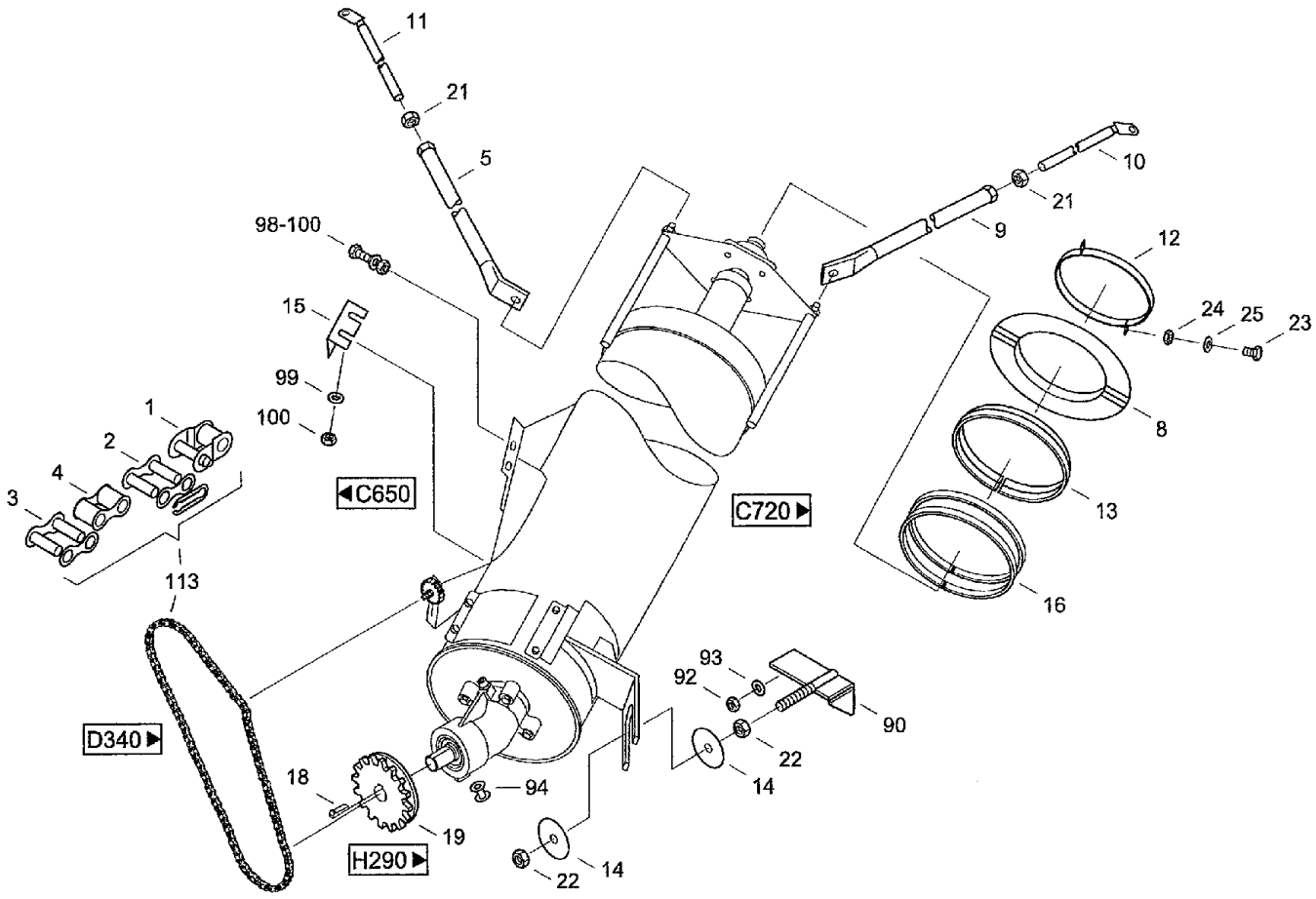

CF80 CASE IH CROSS FLOW COMBINE

C710(01) ADVANCEMENT- TANK FILL. SCREW, VARIOUS COMPONENTS

Ref	Part Number	Qty	Description
98	614-8020	8	BOLT, Hex, M8 x 20, 8.8, Hex bolt M8x20 IS04017 8.8
99	825-1408	8	NUT, M8, Cl 8,
100	06577044	16	WASHER, SPECIAL, Locking washer B8
113	31329535	1	CHAIN (AGRICULTURE), Roller chains 12B-1/84 L L B E B E

C710(02) ADVANCEMENT- TANK FILL. SCREW,VARIOUS COMPONENTS

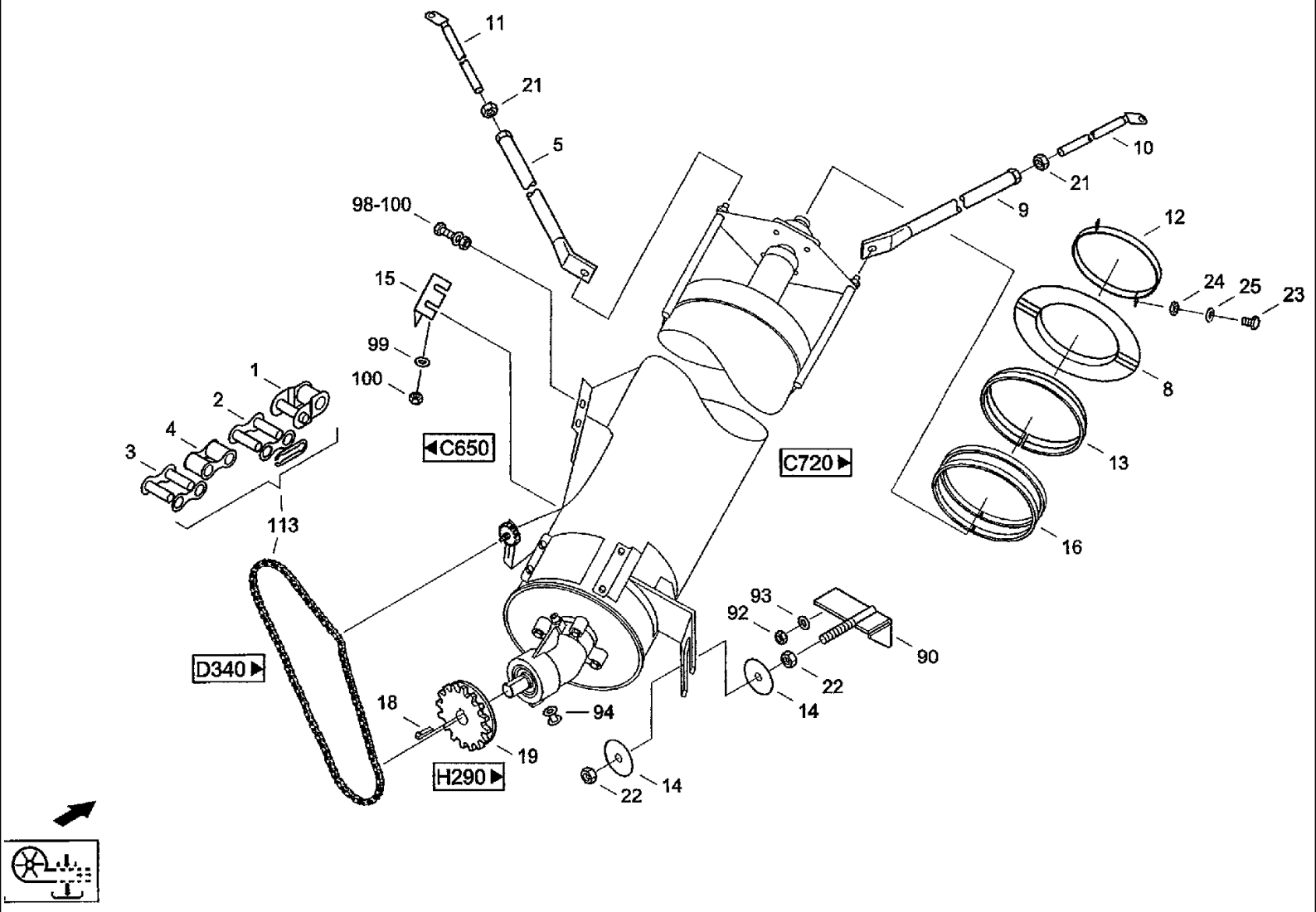

CF80 CASE IH CROSS FLOW COMBINE

C710(02) ADVANCEMENT- TANK FILL. SCREW,VARIOUS COMPONENTS

Ref	Part Number	Qty	Description
1	06805491	1	LINK, Link L-12B-1 DIN8187
2	06804023	1	LINK, Link E-12B-1 DIN8187
3	060506732	1	LINK, Link A-12B-1 DIN8187
4	31325861	1	LINK, Link B-12B-1 DIN8187
5	31329391	1	SUPPORT, Stay h
8	061009306	2	COVER, Cap c071-10.00.000крыша
9	31329375	1	SUPPORT, Stay V c032-50.00.000 распорка
10	31329350	1	STEM, Spindle V 524-51505:0000/04 винт
11	31329414	1	STEM, Spindle h 524-51510:000/04 винт
12	060114203	2	CLAMP, Clamp c071-20.00.001 зажим
13	061009314	1	JOINT, RUBBER, Rubber seal c071-00.00.002 уплотнение
14	061009322	2	WASHER, Washer c071-00.00.003 шайба
15	31345190	1	ANGLE, Sealing angle
16	31345840	2	JOINT, RUBBER, Seal
18	003506388	1	KEY, Gib-head key 8x7x32 DIN6887
19	061032104	1	GEAR, Driving wheel Z19 c071-40.00.000 звездочка
21	825-1412	2	NUT, M12, Cl 8, Hex nut M12ISO40328
22	825-1416	2	NUT, M16, Cl 8,
23	614-8030	2	BOLT, Hex, M8 x 30, 8.8, Hex bolt M8x30 ISO4017 8.8
24	825-1408	2	NUT, M8, Cl 8,
25	06577028	2	WASHER, SPECIAL, Locking washer M8
90	31323320	1	HOLDER, Support TFS c071-30.00.000 держатель
92	825-1410	2	NUT, M10, Cl 8,
93	06577052	2	WASHER, SPECIAL, Locking washer B10
94	01147656	1	GROMMET, Grommet A6x1,5

C720(01) ADVANCEMENT- TANK FILL. SCREW

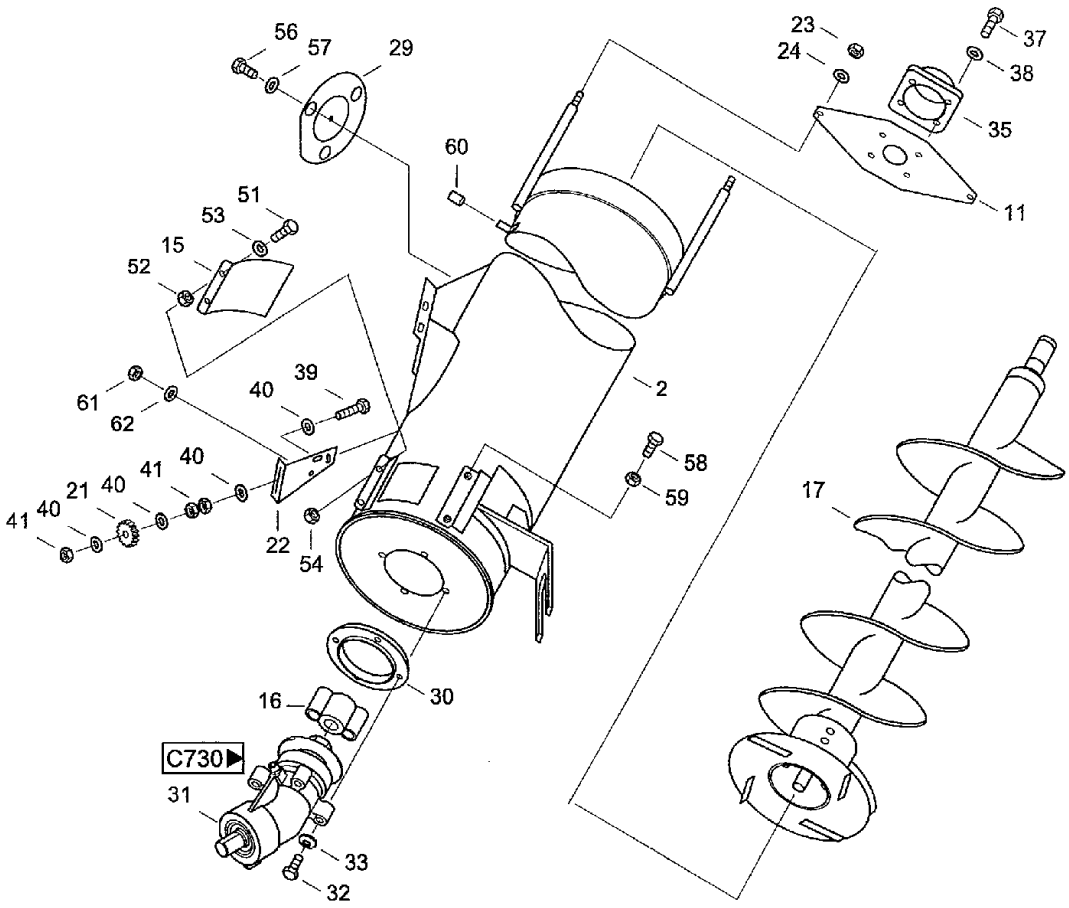

CF80 CASE IH CROSS FLOW COMBINE

C720(01) ADVANCEMENT- TANK FILL. SCREW

Ref	Part Number	Qty	Description
2	31329447	1	FRAME, Funnel c072-10.00.000 воронка
11	060114076	1	PLATE, PIVOT, Bearing plate c072-30.00.001 пластина
15	061080048	1	FLAP, Cover c072-00.00.001 крышка
16	061032073	1	DRIVE DOG, Follower
17	31329455	1	WORM, Tank fill, screw (1618) c072-20.00.000 шнек загрузки бункера
21	060501961	1	DRIVE SPROCKET, Sprocket TYP-N3/4ZOLL-12-ART.
22	31329576	1	HOLDER, Support c072-40.00.000 опора
23	825-1410	2	NUT, M10, Cl 8,
24	06577052	2	WASHER, SPECIAL, Locking washer B10
29	061081073	1	COVER, Cap c072-50.00.000 крышка
30	31285338	1	BACK-UP RING, Ring
31	020058363	1	TRANSMISSION, Bevel gear 527 B2(TANKFULLSCHN ECKE)
32	614-10050	4	BOLT, Hex, M10 x 50, 8.8, Full Thd, Hex bolt M10x50ISO40178.8
33	97025021	4	SPRING, BELLEVILLE, Belleville spring 20x10,2x1,0 DIN2093 CK67
35	060501978	1	CARRIER, BEARING, Flange bearing housing FWS30U MIT KEGELS CHMIERNIP
37	614-10030	4	BOLT, Hex, M10 x 30, 8.8,
38	06577052	4	WASHER, SPECIAL, Locking washer B10
39	614-12060	1	BOLT, Hex, M12 x 60, 8.8, Full Thd, Hex bolt M12x60ISO40178.8
40	06577011	4	PLATE, LOCKING, Locking washer M12
41	829-4412	3	NUT, Thin, M12 x 1.75, Cl 05, Hex nut M12ISO403505
51	614-8030	2	BOLT, Hex, M8 x 30, 8.8, Hex bolt M8x30ISO40178.8
52	825-1408	2	NUT, M8, Cl 8,
53	06577044	2	WASHER, SPECIAL, Locking washer B8
54	832-10408	2	NUT, M8 x 1.25, Cl 8, Hex nut M8 DIN982 8
56	614-10016	3	BOLT, Hex, M10 x 16, 8.8, Full Thd, Hex bolt M10x16ISO40178.8

C720(02) ADVANCEMENT- TANK FILL. SCREW

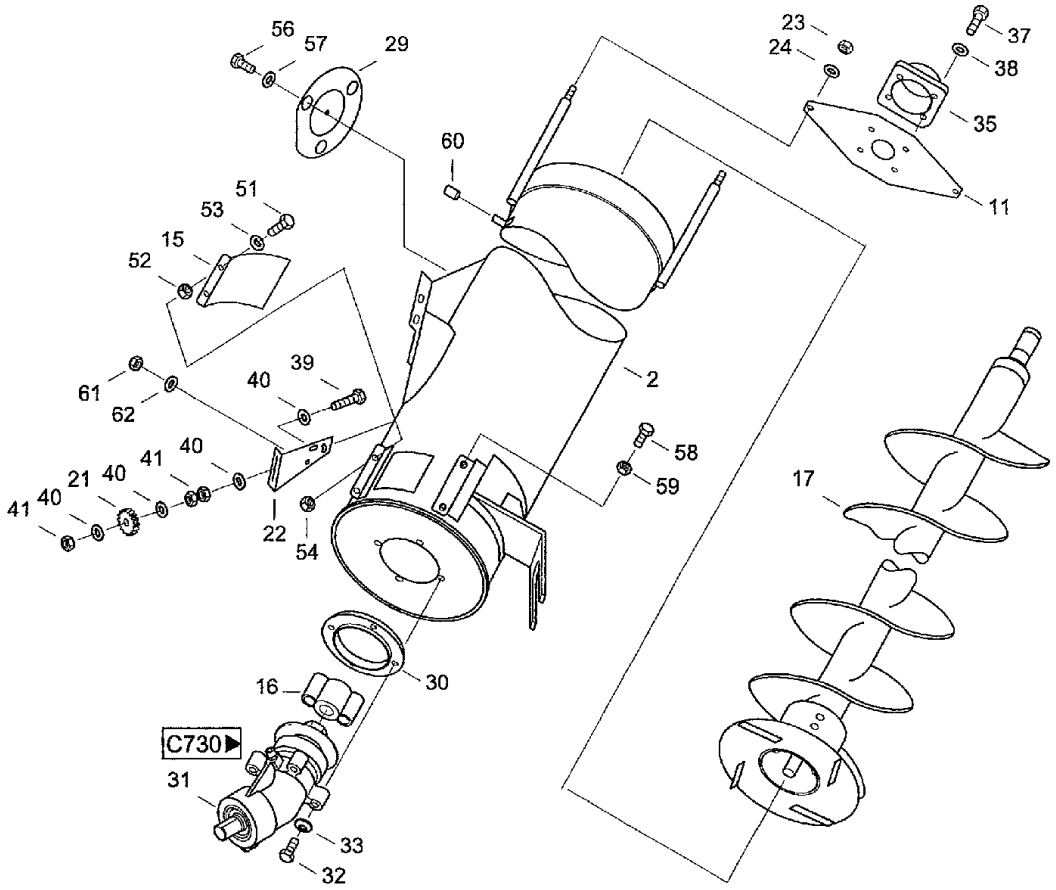

CF80 CASE IH CROSS FLOW COMBINE

C720(02) ADVANCEMENT- TANK FILL. SCREW

Ref	Part Number	Qty	Description
57	06577052	3	WASHER, SPECIAL, Locking washer B10
58	614-8016	2	BOLT, Hex, M8 x 16, 8.8,
59	829-4408	2	NUT, Thin, M8 x 1.25, Cl 05, Hex nut M8 IS04035 05
60	020513827	2	SLEEVE, Sleeve
61	825-1410	3	NUT, M10, Cl 8,
62	06577052	3	WASHER, SPECIAL, Locking washer B10
		\	
64		1	защита c072-00.00.002

C730(01) ADVANCEMENT- BEVEL GEAR DRIVE

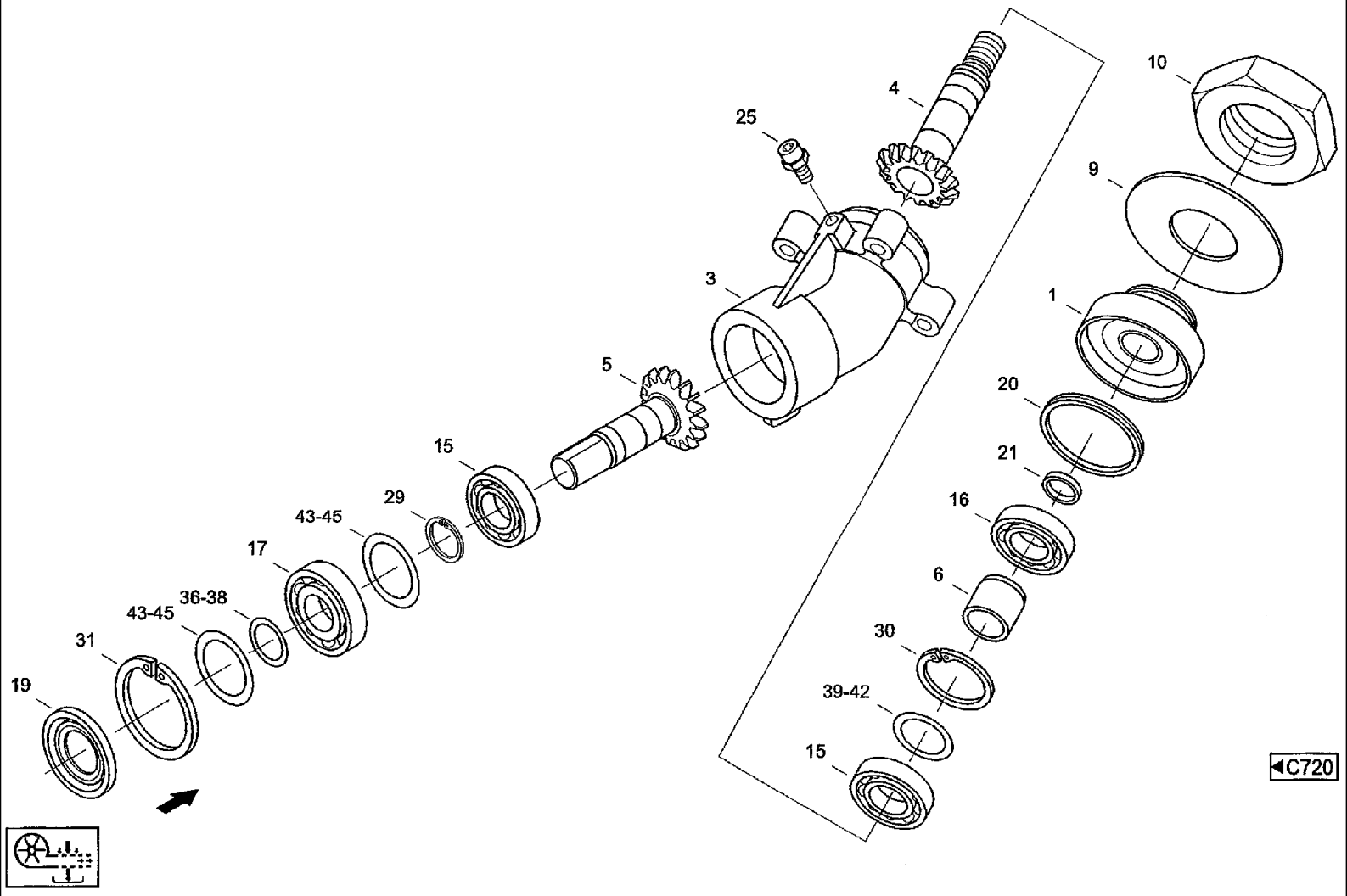

CF80 CASE IH CROSS FLOW COMBINE

C730(01) ADVANCEMENT- BEVEL GEAR DRIVE

Ref	Part Number	Qty	Description
1	065501522	1	COVER, Cap SACH-NR.550152
3	065501547	1	CASE, Housing SACH-NR.550154
4	065501563	1	SHAFT, Shaft SACH-NR.550156
5	065501610	1	SHAFT, Shaft
6	065501588	1	BUSHING, Sleeve SACH-NR.550158
9	065501596	1	WASHER, Washer SACH-NR.550159
10	006226007	1	NUT, Hex nut BM24-10DIN6330
15	03652042	2	BEARING, Grooved ball bearing 6206 DIN625
16	003680632	1	BEARING, Grooved ball bearing 6206N-2RS DIN625
17	97060506	1	BEARING, BALL, Grooved ball bearing 6306 DIN625
19	001128557	1	SEAL, Shaft seal AS30x72x8-NBR DIN3760
20	001169524	1	SEAL, V-seal WVA-0075-N60B-AF
21	01131552	1	O-RING, O-ring 25x2-NBR60 DIN3770
25	006108934	1	VALVE BLEEDER, Breather valve 1012-01-02-00
29	800-1130	3	RING, SNAP, M30, Ext, Snap ring 30x1,5DIN471 FST
30	800-2162	1	RING, SNAP, M62, Int, Snap ring 62x2 DIN472 FST
31	800-2172	1	CIRCLIP, Snap ring 72x2,5 DIN472 FST
36	97022663	1	SHIM, Shim 30x42x0,5 DIN988 ST
37	06609205	2	SHIM, Shim 30x42x0,2 DIN988
38	006608614	2	SHIM, Shim 30x42x0,1 DIN988
39	006609262	1	SHIM, Shim 50x62x2 DIN988
40	06609254	1	SHIM, Shim 50x62x0,5 DIN988
41	006609246	2	SHIM, Shim 50x62x0,2 DIN988
42	06625648	2	SHIM, Shim 50x62x0,1 DIN988
43	06628056	2	SHIM, Shim 62x72x0,5 DIN988

C730(02) ADVANCEMENT- BEVEL GEAR DRIVE

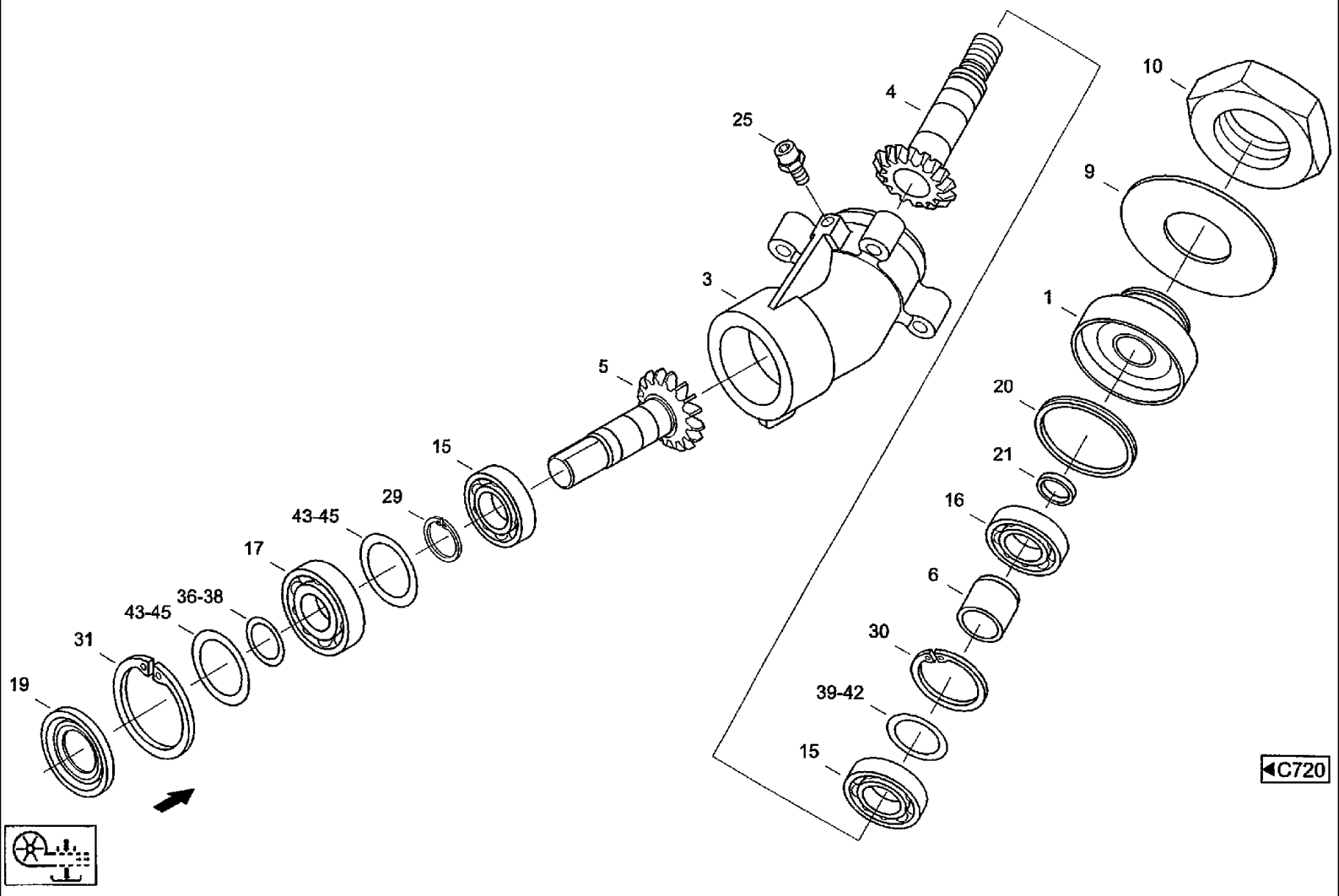

CF80 CASE IH CROSS FLOW COMBINE

C730(02) ADVANCEMENT- BEVEL GEAR DRIVE

Ref	Part Number	Qty	Description
44	006628007	4	SHIM, Shim 62x72x0,2 DIN988
45	006627996	3	SHIM, Shim 62x72x0,1 DIN988

C780(01) ADVANCEMENT- GRAIN TANK, UPPER PART

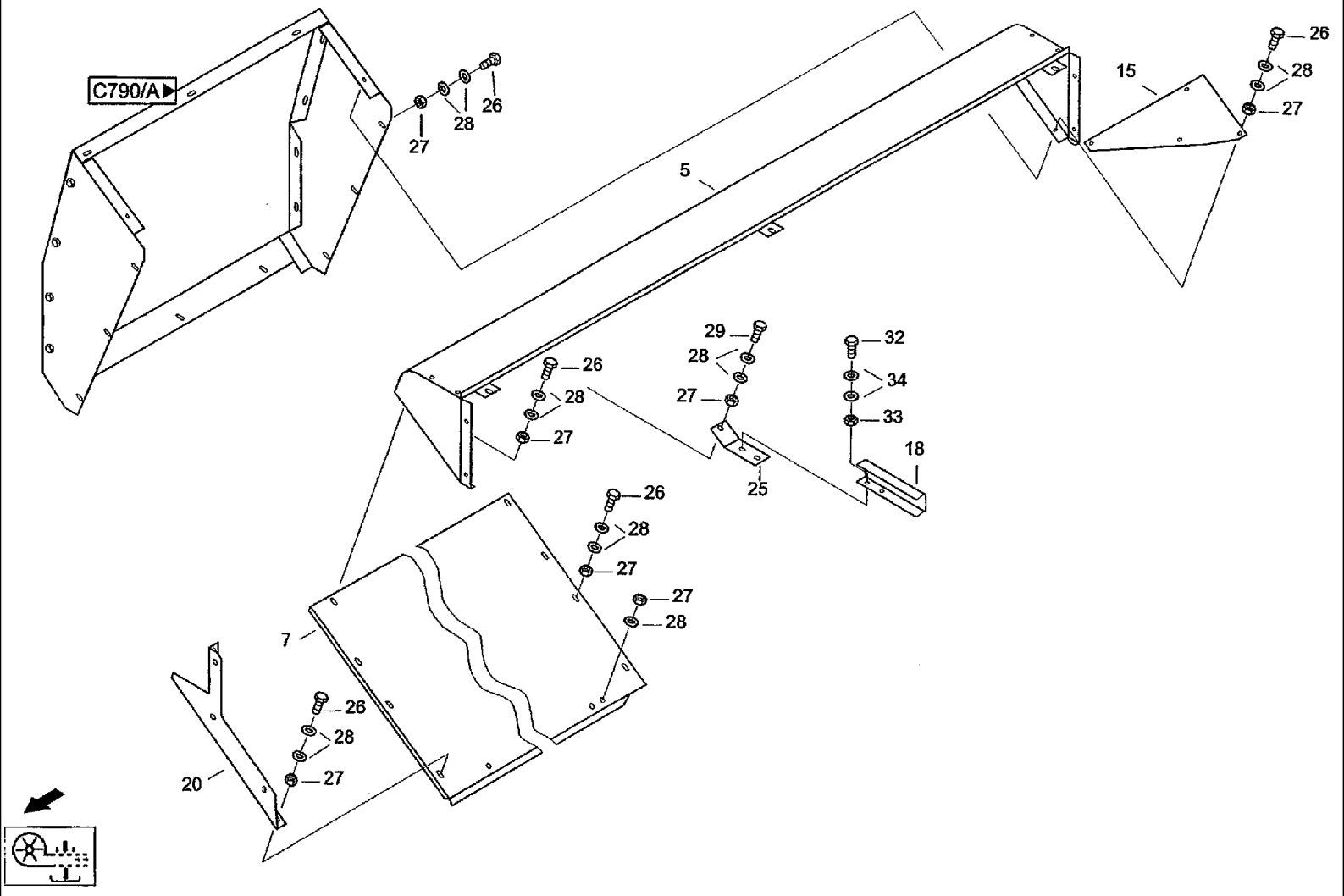

CF80 CASE IH CROSS FLOW COMBINE

C780(01) ADVANCEMENT- GRAIN TANK, UPPER PART

Ref	Part Number	Qty	Description
5	061072505	2	PROFILE, Corner section
7	061072216	1	PLATE, Panel
15	061072554	2	PLATE, Corner plate
18	061072546	1	SUPPORT, Crossbar
20	31305825	1	ANGLE BAR, Angle
25	061011848	2	RETAINER, Support
26	614-8016	33	BOLT, Hex, M8 x 16, 8.8,
27	825-1408	44	NUT, M8, Cl 8,
28	06577044	110	WASHER, SPECIAL, Locking washer B8
29	614-8020	2	BOLT, Hex, M8 x 20, 8.8, Hex bolt M8X20ISO40178.8
32	614-8025	4	BOLT, Hex, M8 x 25, 8.8,
33	825-1408	4	NUT, M8, Cl 8,
34	06577044	8	WASHER, SPECIAL, Locking washer B8
51	31321841	1	SEAL, Sealing tape
55	31340241	1	COVER, PROTECTIVE, Cover
58	31340362	1	JOINT, RUBBER, Sealing tape
60	31346368	1	PARTITION, Intermediate panel

CF80 CASE IH CROSS FLOW COMBINE

C780(02) ADVANCEMENT- GRAIN TANK, UPPER PART

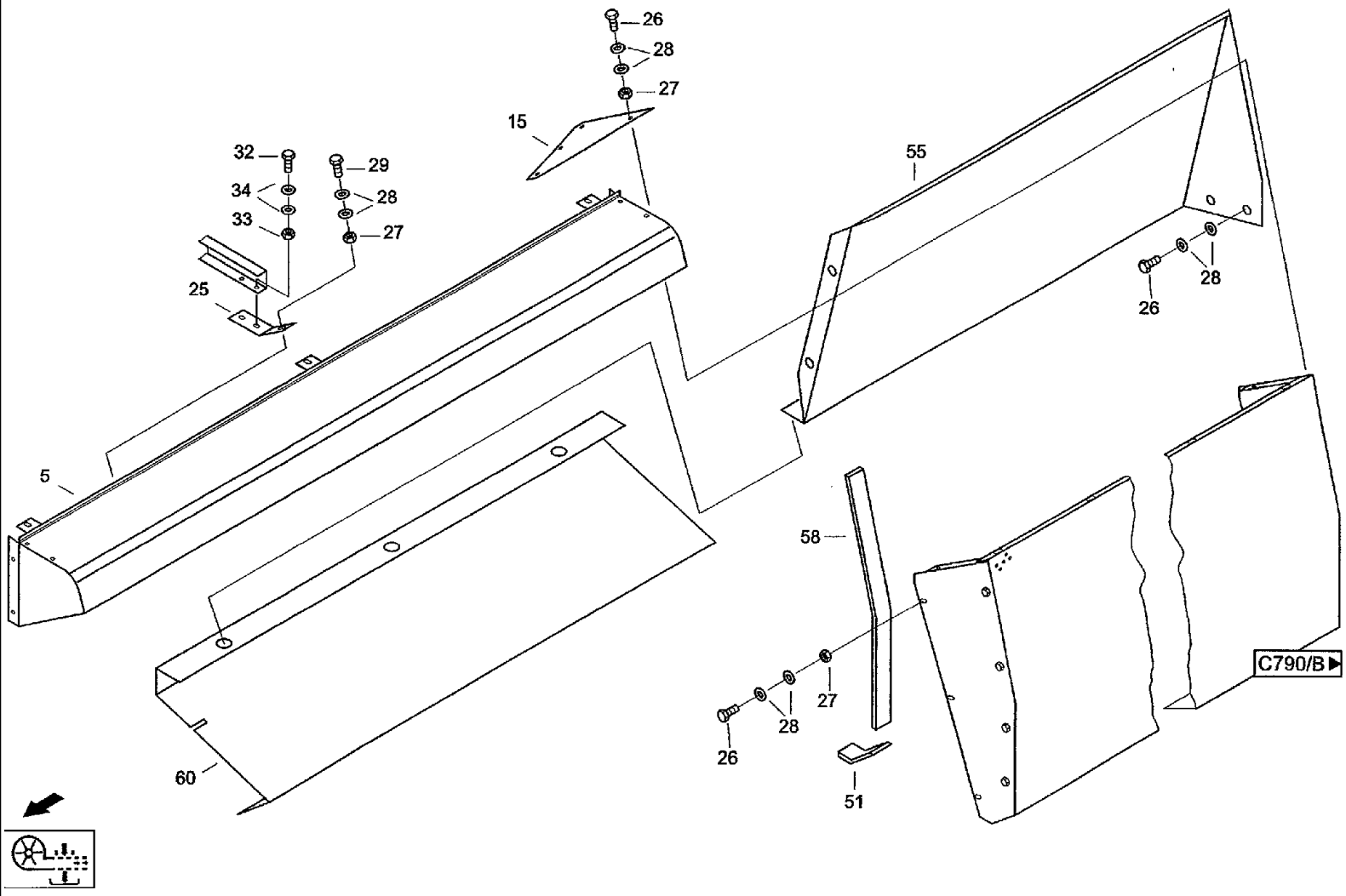

CF80 CASE IH CROSS FLOW COMBINE

C780(02) ADVANCEMENT- GRAIN TANK, UPPER PART

Ref	Part Number	Qty	Description
5	061072505	2	PROFILE, Corner section
7	061072216	1	PLATE, Panel
15	061072554	2	PLATE, Corner plate
18	061072546	1	SUPPORT, Crossbar
20	31305825	1	ANGLE BAR, Angle
25	061011848	2	RETAINER, Support
26	614-8016	33	BOLT, Hex, M8 x 16, 8.8,
27	825-1408	44	NUT, M8, Cl 8,
28	06577044	110	WASHER, SPECIAL, Locking washer B8
29	614-8020	2	BOLT, Hex, M8 x 20, 8.8, Hex bolt M8X20ISO40178.8
32	614-8025	4	BOLT, Hex, M8 x 25, 8.8,
33	825-1408	4	NUT, M8, Cl 8,
34	06577044	8	WASHER, SPECIAL, Locking washer B8
51	31321841	1	SEAL, Sealing tape
55	31340241	1	COVER, PROTECTIVE, Cover
58	31340362	1	JOINT, RUBBER, Sealing tape
60	31346368	1	PARTITION, Intermediate panel

CF80 CASE IH CROSS FLOW COMBINE

C790 ADVANCEMENT- PANEL

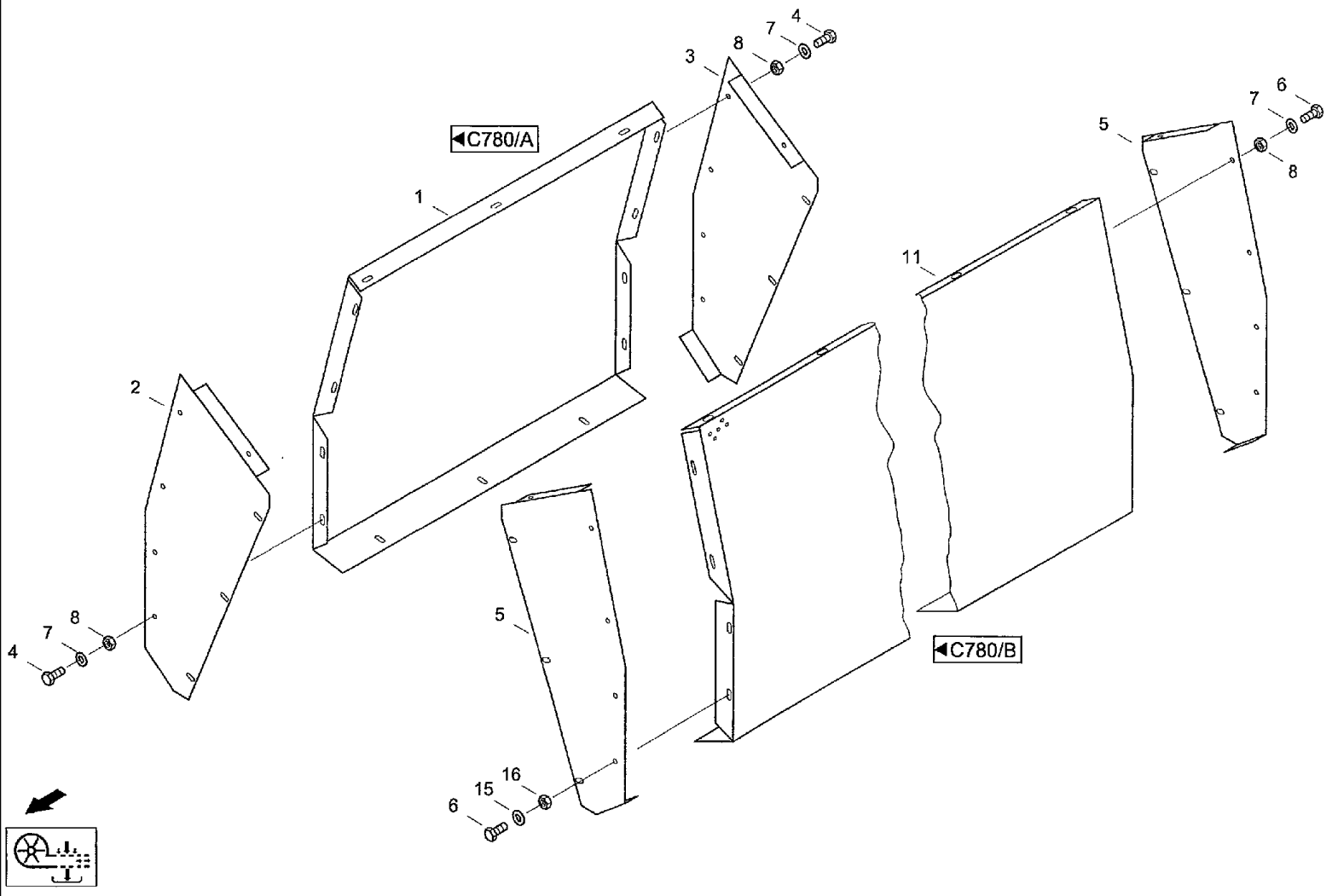

CF80 CASE IH CROSS FLOW COMBINE

C790 ADVANCEMENT- PANEL

Ref	Part Number	Qty	Description
1	061072152	1	PLATE, Side panel Links
2	061072441	2	PLATE, Stabilizing plate
3	061072458	1	PLATE, Stabilizing plate
4	614-8016	8	BOLT, Hex, M8 x 16, 8.8,
5	061072458	1	PLATE, Stabilizing plate
6	614-8016	8	BOLT, Hex, M8 x 16, 8.8,
7	06577044	8	WASHER, SPECIAL, Locking washer B8
8	825-1408	8	NUT, M8, Cl 8,
11	061072160	1	PLATE, Side panel Rechts
15	06577044	8	WASHER, SPECIAL, Locking washer B8
16	825-1408	8	NUT, M8, Cl 8,

C810(01) ADVANCEMENT- GRAIN TANK, MOUNT

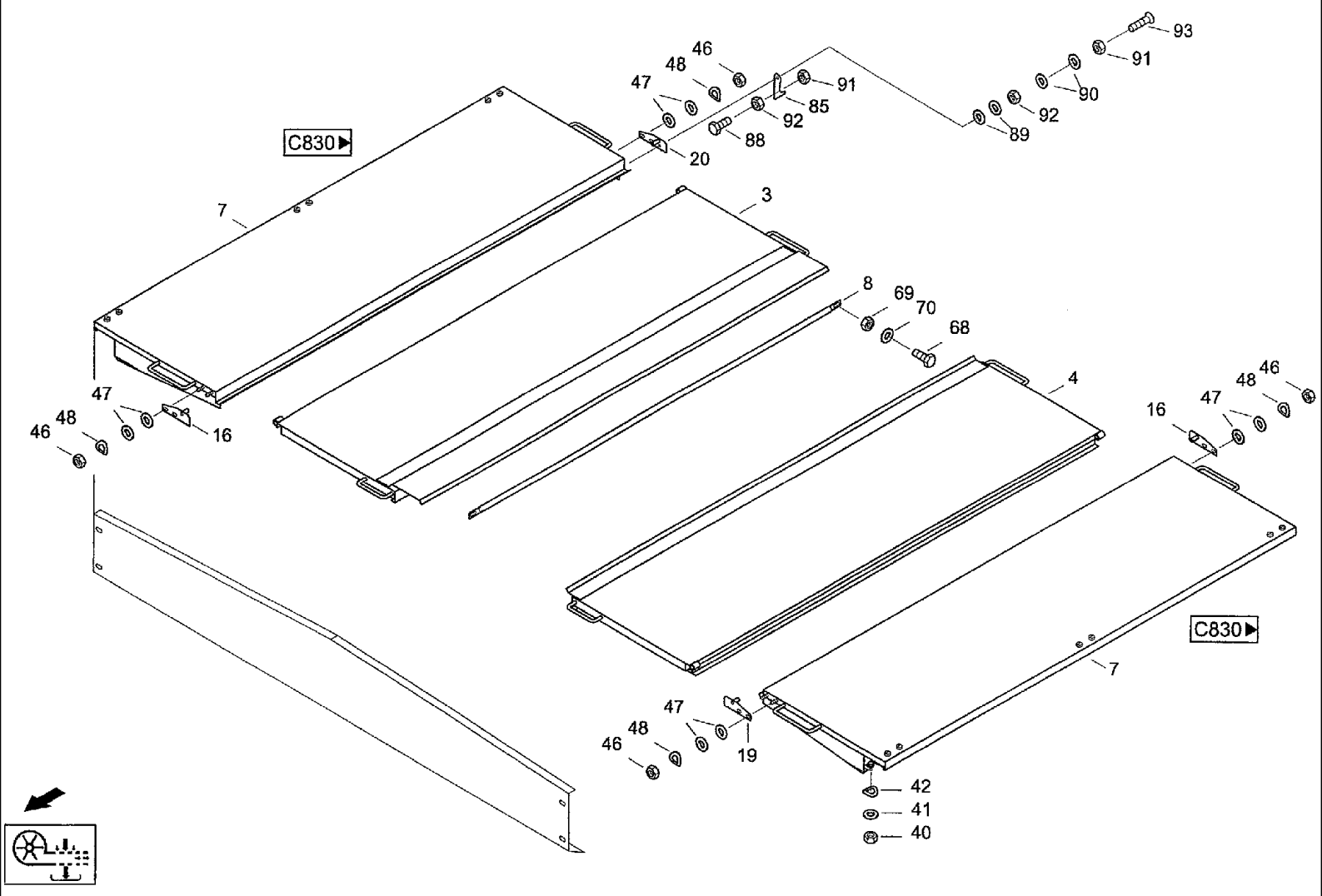

CF80 CASE IH CROSS FLOW COMBINE

C810(01) ADVANCEMENT- GRAIN TANK, MOUNT

Ref	Part Number	Qty	Description
3	061003864	1	FLAP, Door
4	061003903	1	FLAP, Door
5	061003928	2	WALL, Front wall
7	061003198	2	LID, Cap
8	061013640	1	ROD, Drawbar
12	061003204	4	BEARING, Bearing
16	060076198	2	SHIN, Strap
19	060076220	1	SHIN, Strap
20	061026887	1	SHIN, Strap
26	614-8016	8	BOLT, Hex, M8 x 16, 8.8,
27	825-1408	8	NUT, M8, Cl 8,
28	06577044	8	WASHER, SPECIAL, Locking washer B8
29	895-25008	8	WASHER, M8 x 20 x 1.6, Washer 8,4 DIN9021 140HV
33	614-8020	18	BOLT, Hex, M8 x 20, 8.8, Hex bolt M8X20ISO40178.8
34	825-1408	18	NUT, M8, Cl 8,
35	06577044	18	WASHER, SPECIAL, Locking washer B8
36	895-25008	18	WASHER, M8 x 20 x 1.6, Washer 8,4 DIN9021 140HV
40	825-1410	10	NUT, M10, Cl 8,
41	020925812	10	WASHER, Washer
42	06501428	10	WASHER, SPRING, Wave washer spring B10DIN137FST
46	825-1410	8	NUT, M10, Cl 8,
47	020925812	16	WASHER, Washer
48	06501428	8	WASHER, SPRING, Wave washer spring B10DIN137FST
51	825-1410	8	NUT, M10, Cl 8,
52	06577052	8	WASHER, SPECIAL, Locking washer B10

C810(02) ADVANCEMENT- GRAIN TANK, MOUNT

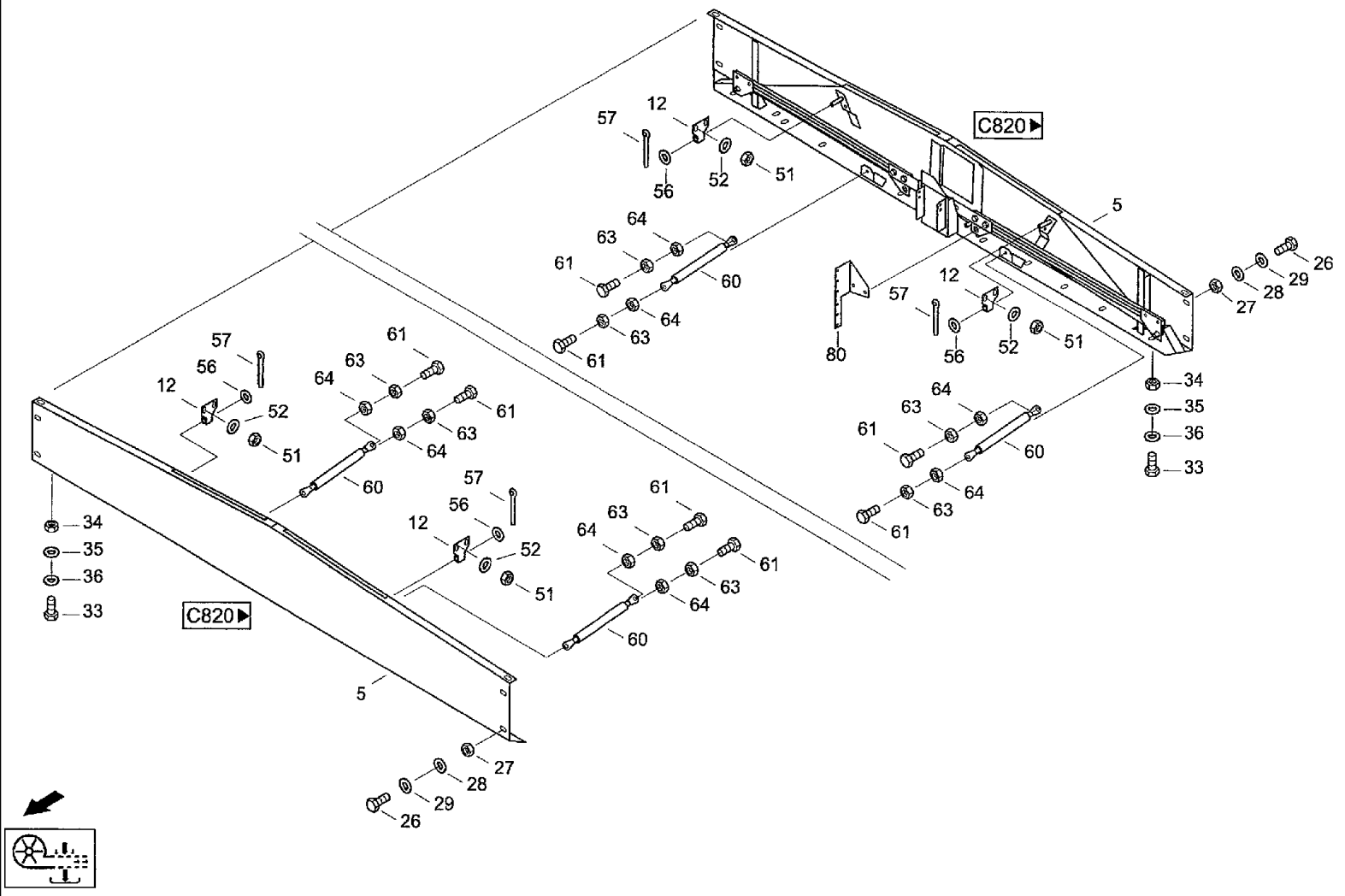

CF80 CASE IH CROSS FLOW COMBINE

C810(02) ADVANCEMENT- GRAIN TANK, MOUNT

Ref	Part Number	Qty	Description
56	895-11012	4	WASHER, M12 x 24 x 2.5, Washer 13DIN125ST
57	733-4020	4	PIN, SPLIT (COTTER), M4 x 20, Splint pin 4x20 DIN94 ST
60	060501141	4	CYLINDER, GAS, Gas pressure spring G08 19 0200 1 0500 AS30 AS30 02
61	614-8025	8	BOLT, Hex, M8 x 25, 8.8,
63	825-1408	8	NUT, M8, Cl 8,
64	832-46408	8	NUT, LOCK, M8 x 1.25, Cl 8,
68	614-10025	2	BOLT, Hex, M10 x 25, 8.8, Full Thd, Hex bolt M10x25ISO40178.8
69	825-1410	2	NUT, M10, Cl 8,
70	06577052	2	WASHER, SPECIAL, Locking washer B10
80	061024057	1	RETAINER, Support
85	060183617	1	PAWL, Pawl
88	614-8040	1	BOLT, Hex, M8 x 40, 8.8, Full Thd, Hex, M8 x 40, 8.8, Full Thd
89	06502638	2	WASHER, Washer R9DIN440100HV
90	895-25008	2	WASHER, M8 x 20 x 1.6, Washer 8,4 DIN9021 140HV
91	832-10408	2	NUT, M8 x 1.25, Cl 8, Hex nut MS DIN982 8
92	825-1408	2	NUT, M8, Cl 8,
93	006071053	1	SCREW, Countersunk screw M8x40-5.8-A3C DIN963

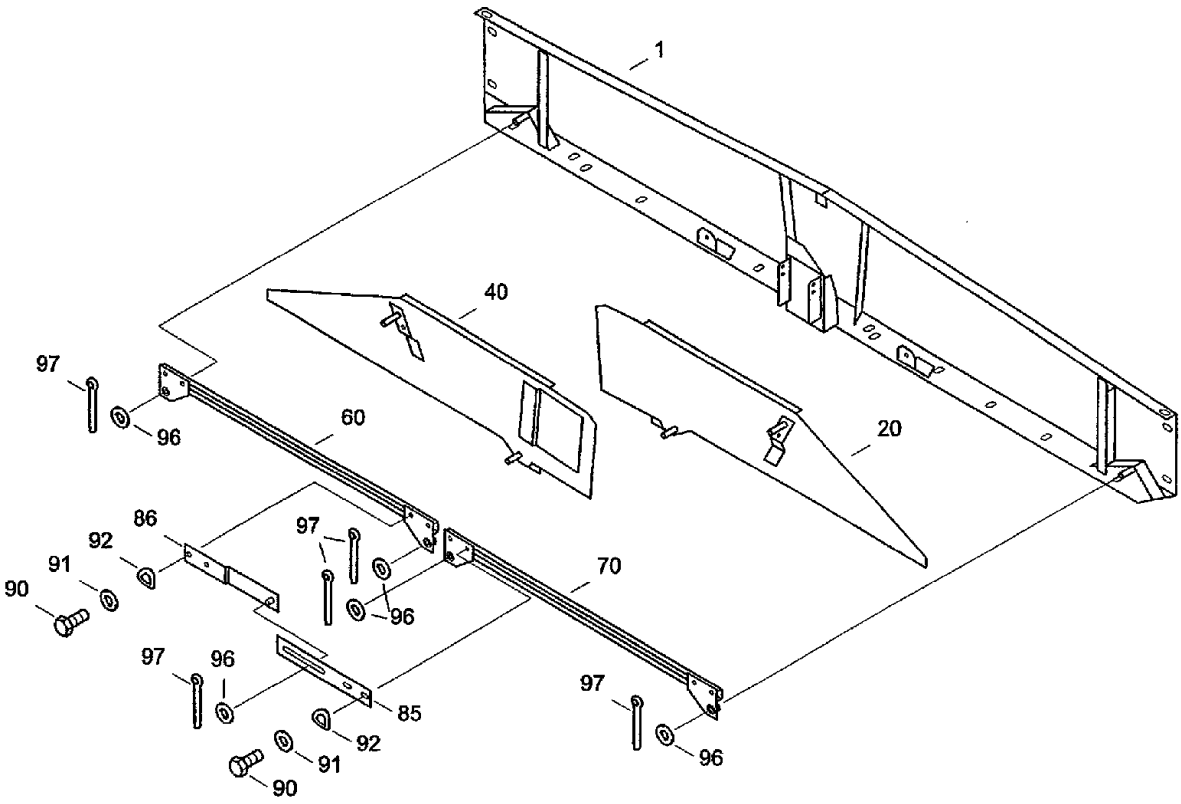

C810

CF80 CASE IH CROSS FLOW COMBINE

C820 ADVANCEMENT- FRONT WALL

Ref	Part Number	Qty	Description
1	061003936	1	COVER, REAR, Rear wall
20	061003421	1	SPOOL, Spool
40	061003438	1	SPOOL, Spool
60	061003487	1	LEVER, Lever
70	061003526	1	LEVER, Lever
85	060131696	1	SHIN, Strap
86	061003542	1	LEVER, Lever
90	614-10020	4	BOLT, Hex, M10 x 20, 8.8, Full Thd,
91	020925812	4	WASHER, Washer
92	06501428	4	WASHER, SPRING, Wave washer spring B10DIN137FST
96	895-11012	5	WASHER, M12 x 24 x 2.5, Washer 13DIN125ST
97	733-4020	5	PIN, SPLIT (COTTER), M4 x 20, Splint pin 4x20 DIN94 ST

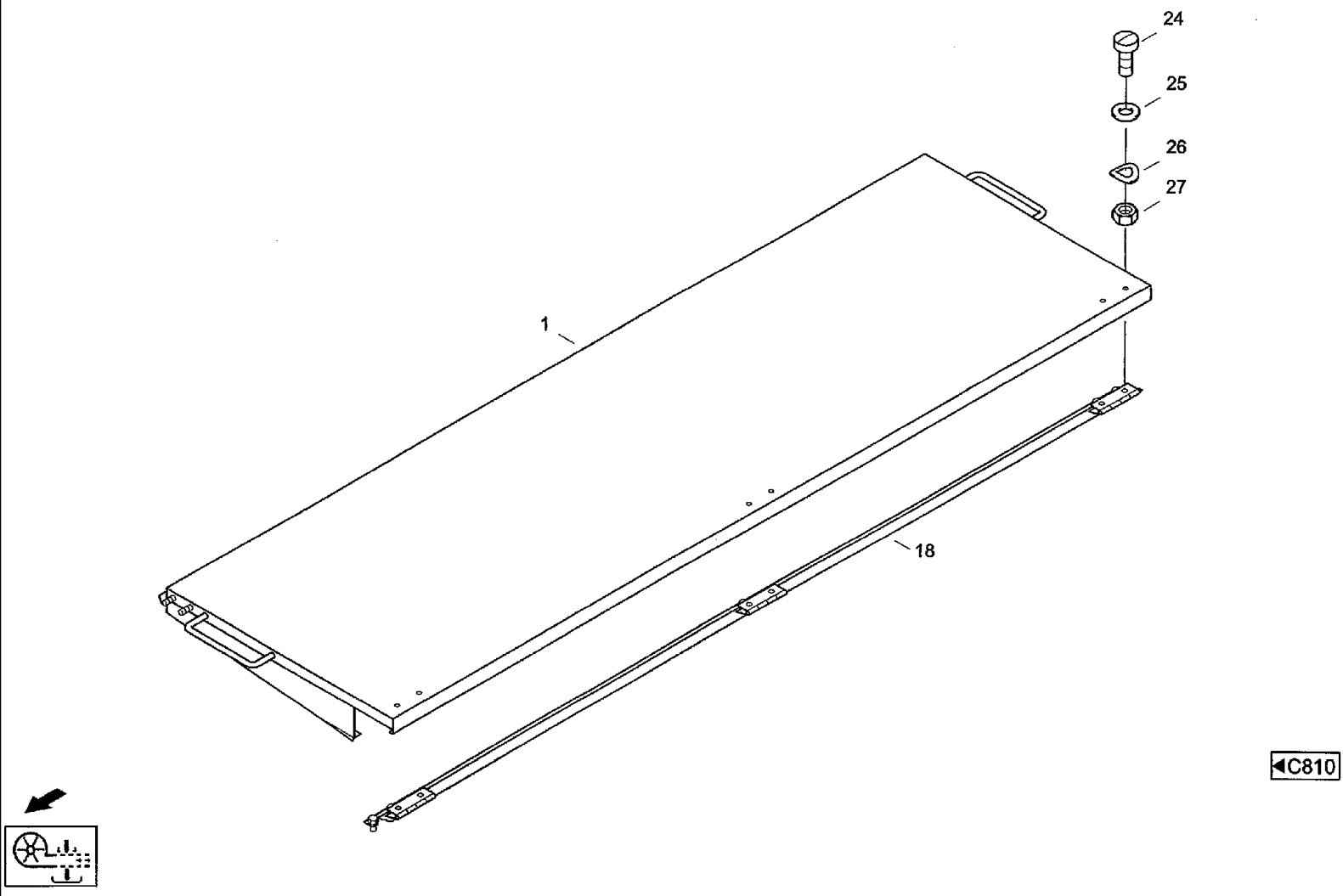

◀C810

CF80 CASE IH CROSS FLOW COMBINE

C830 ADVANCEMENT- CAP

Ref	Part Number	Qty	Description
1	061003220	1	COVER, Cap
18	061003278	1	CARRIER, Support
24	060512216	6	SCREW, Flat-round-head screw M6x16-A3C CN 20 0152 BENR. 636
25	895-25006	6	WASHER, M6 x 18 x 1.6, Washer 6,4 DIN9021
26	06501397	6	WASHER, SPRING, Wave washer spring B6DIN137FST
27	825-1406	6	NUT, M6, Cl 8,

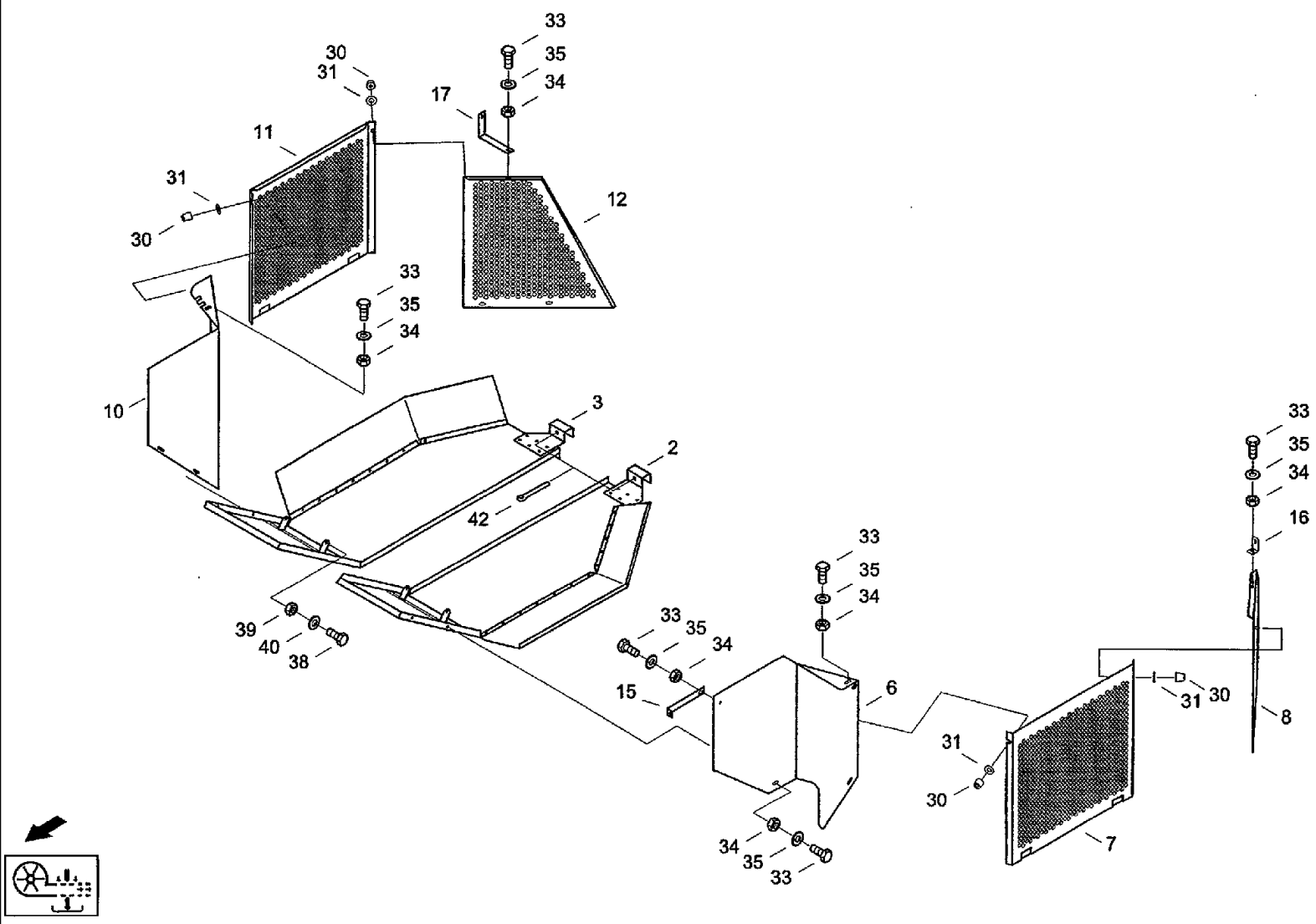
33
35
34
30
31
17
11
31
30
12
33
35
34
10
3
2
42
39
40
38
33
35
34
15
33
35
34
6
16
31
30
8
31
30
7
34
35
33

CF80 CASE IH CROSS FLOW COMBINE

C840 ADVANCEMENT- FAN, GUARD

Ref	Part Number	Qty	Description	
2	31326083	1	PROTECTOR, Guard l, u	c084-10.10.000 защита левая
3	31326188	1	PROTECTOR, Guard r, u	c084-20.10.000 защита правая
6	31326122	1	COVER, PROTECTIVE, Cover l	c084-10.00.001 кожух
7	31325146	1	SIEVE, Door l	c084-10.00.002 заслонка
8	31326106	1	PARTITION, Wall l	c084-10.00.003 стенка
10	31326147	1	COVER, PROTECTIVE, Cover r	c084-20.00.001 кожух
11	31326155	1	SIEVE, Door r	c084-10.00.002-01 заслонка
12	31326171	1	PARTITION, Wall r	c084-20.00.003 стенка
15	31345166	1	ANGLE BAR, Angle	c084-10.00.005 уголок
16	31298221	1	ANGLE BAR, Angle	
17	31298238	1	ANGLE BAR, Angle	c084-20.00.004 уголок
30	832-10406	4	NUT, M6 x 1, Cl 8, Hex nut M6 DIN982 8	
31	06577124	4	WASHER, Locking washer B6	
33	614-6016	15	BOLT, Hex, M6 x 16, 8.8,	
34	825-1406	15	NUT, M6, Cl 8,	
35	06577124	15	WASHER, Locking washer B6	
38	614-10025	4	BOLT, Hex, M10 x 25, 8.8, Full Thd, Hex bolt	
39	825-1410	4	NUT, M10, Cl 8,	
40	06577052	4	WASHER, SPECIAL, Locking washer B10	
42	06400431	2	PIN, SPLIT (COTTER), Splint pin 4x56 DIN94 ST	

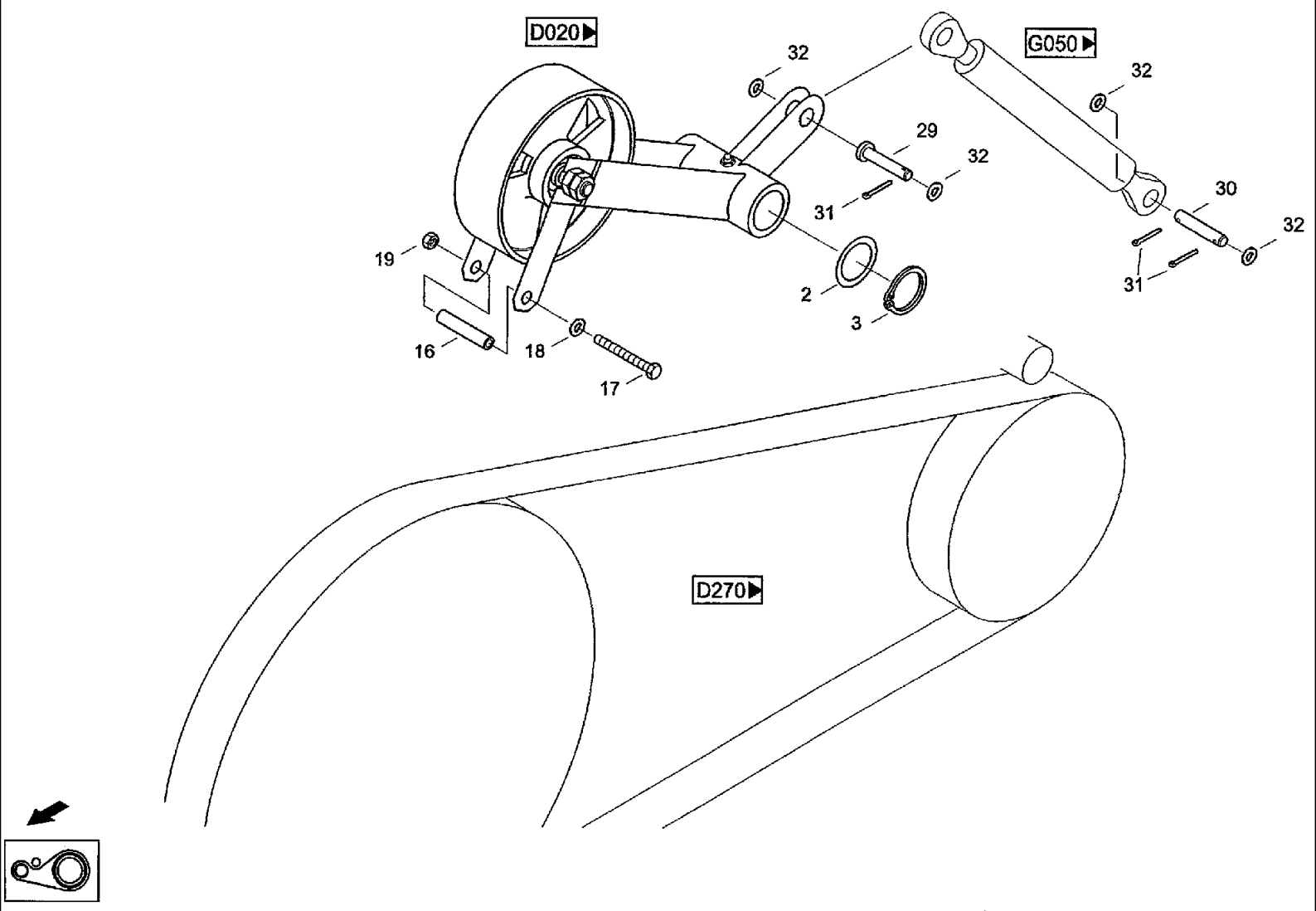
D020
G050
32
32
29
32
31
30
32
31
19
2
3
16
18
17
D270

CF80 CASE IH CROSS FLOW COMBINE

D010(01) DRIVE- CUTTER UNIT, CLUTCH

Ref	Part Number	Qty	Description
2	021422792	4	DISC, Washer MDW-N14510-42x60x 3-RST
3	800-1140	2	RING, SNAP, M40, Ext, Snap ring 40x1,75DIN471 FST
5	061071520	1	GUIDE, Bracket д001-00.00.002 скоба
6	061071561	1	ANGLE BAR, Angle д001-00.00.003 уголок
7	614-8025	6	BOLT, Hex, M8 x 25, 8.8,
8	06577044	12	WASHER, SPECIAL, Locking washer B8
9	825-1408	6	NUT, M8, Cl 8,
10	061071512	1	GUIDE, Belt guide д001-01.00.000 направляющая ремня
11	061071481	2	ANGLE BAR, Angle д001-00.00.009 уголок
12	614-8025	7	BOLT, Hex, M8 x 25, 8.8,
13	614-8035	3	BOLT, Hex, M8 x 35, 8.8, Hex bolt M8X35ISO40178.8
14	06577044	20	WASHER, SPECIAL, Locking washer B8
15	825-1408	10	NUT, M8, Cl 8,
16	20791051	1	SLEEVE, Sleeve д001-01.00.005 гильза
17	814-8090	1	BOLT, Hex, M8 x 90, 8.8, Hex bolt M8x90ISO40148.8
18	06577028	1	WASHER, SPECIAL, Locking washer M8
19	825-1408	1	NUT, M8, Cl 8,
20	061071537	1	GUARD, Guard
22	614-8025	4	BOLT, Hex, M8 x 25, 8.8,
23	06577044	8	WASHER, SPECIAL, Locking washer B8
24	825-1408	4	NUT, M8, Cl 8,
29	060514660	1	PIN, LARGE, Bolt B20H11X75DIN1444ST палец
30	007611416	1	PIN, LARGE, Bolt B20H11X70-ST-A3C DIN1443 палец
31	06402730	3	PIN, SPLIT (COTTER), Splint pin 5x32 DIN94 ST
32	895-11020	4	WASHER, M20 x 37 x 3, Washer 21 DIN125 ST

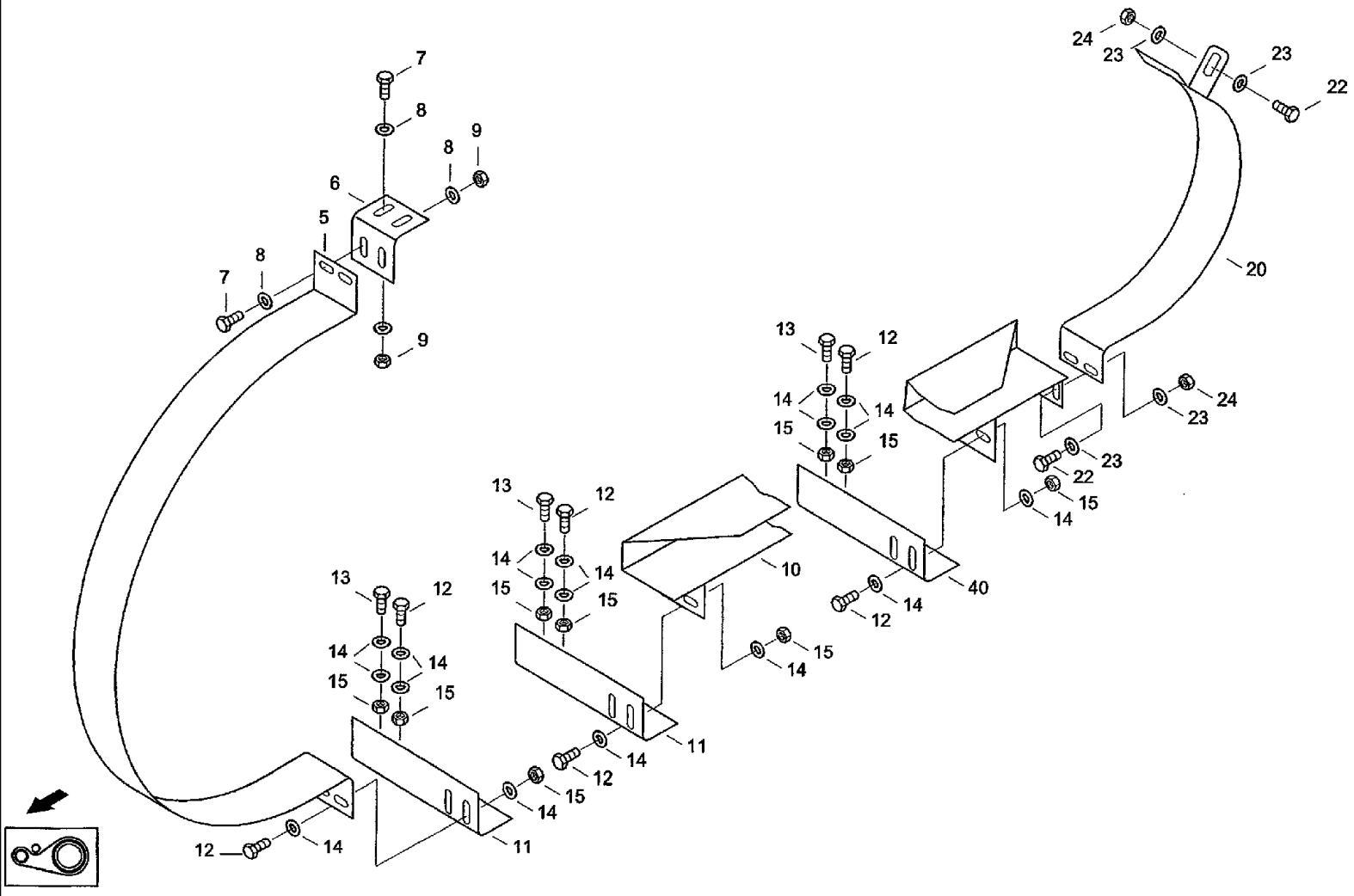
7
8
9
8
6
5
8
7
9
24
23
23
22
20
13
12
14
14
15
15
24
23
23
22
15
14
13
12
14
14
15
15
10
40
12
14
15
14
13
12
14
14
15
15
11
14
12
15
14
11
12
14

CF80 CASE IH CROSS FLOW COMBINE

D010(02) DRIVE- CUTTER UNIT, CLUTCH

Ref	Part Number	Qty	Description
40	31301130	1	SUPPORT, Support

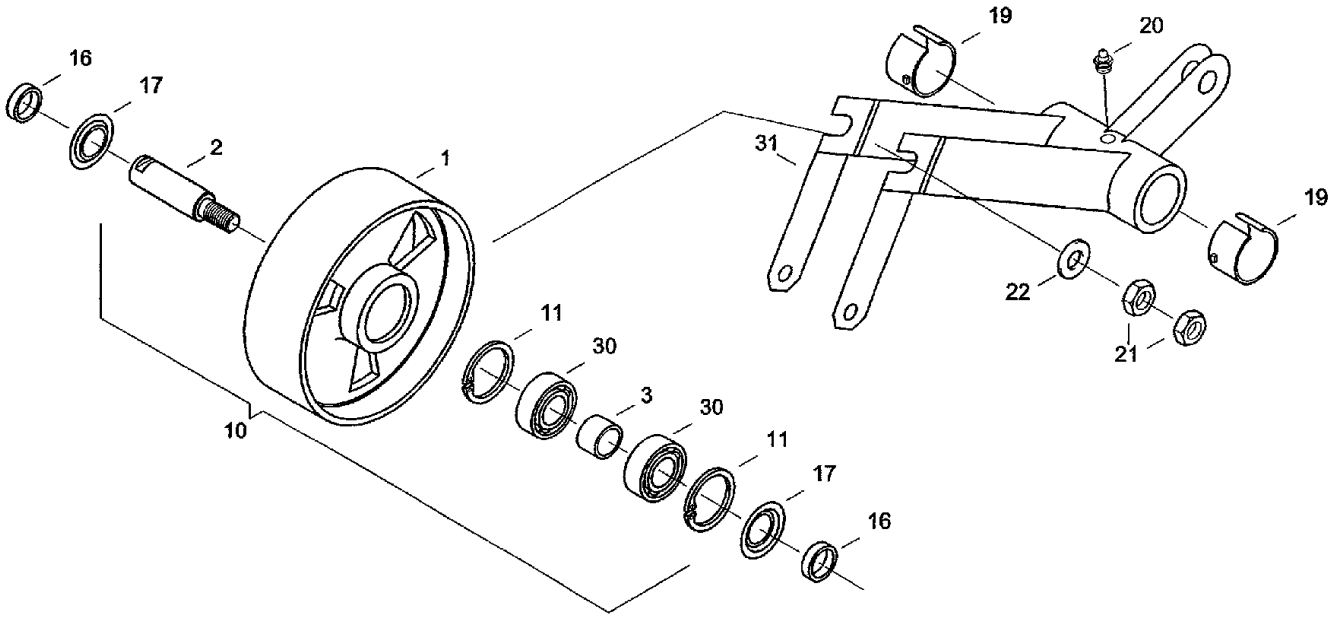

◀D010

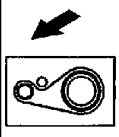

CF80 CASE IH CROSS FLOW COMBINE

D020 DRIVE- ROCKER

Ref	Part Number	Qty	Description
1	020508163	1	ROLLER, SHIFTER, Roller RZ 020508171
2	020476798	1	PIN, LARGE, Bolt 524-52103:009/04 РОЛИК
3	020476781	1	BUSHING, Sleeve 5552-2601:016/04 ПАЛЕЦ
10	020508114	1	TIGHTENER SHEAVE, Idler
11	800-2152	2	RING, SNAP, M52, Int, Snap ring 52x2 DIN472 FST
16	020508122	2	BUSHING, Sleeve 5304/20195 ВТУЛКА
17	020472327	2	SEAL WASHER, Seal ring 5550-6200:075/04 УПЛОТНИТЕЛЬНАЯ ШАЙБА
19	020464544	2	BUSHING, Bushing GLEITBUCHSE 04/10123 ВТУЛКА СКОЛЬЖЕНИЯ
20	03617056	1	NIPPLE, LUBE, Grease nippel AM8x1 DIN71412
21	829-23416	2	NUT, Thin, M16 x 1.5, Cl 05, Hex nut M16x1,5ISO867505
22	006509941	1	WASHER, Washer 18-A3C DIN126
30	03652034	2	BEARING, Grooved ball bearing 6205-RS DIN625
31	061071432	1	DIPPER, Swivel lever д002-01.00.000 поворотный рычаг

D040(01) DRIVE- THRESHING MECHANISM, CLUTCH

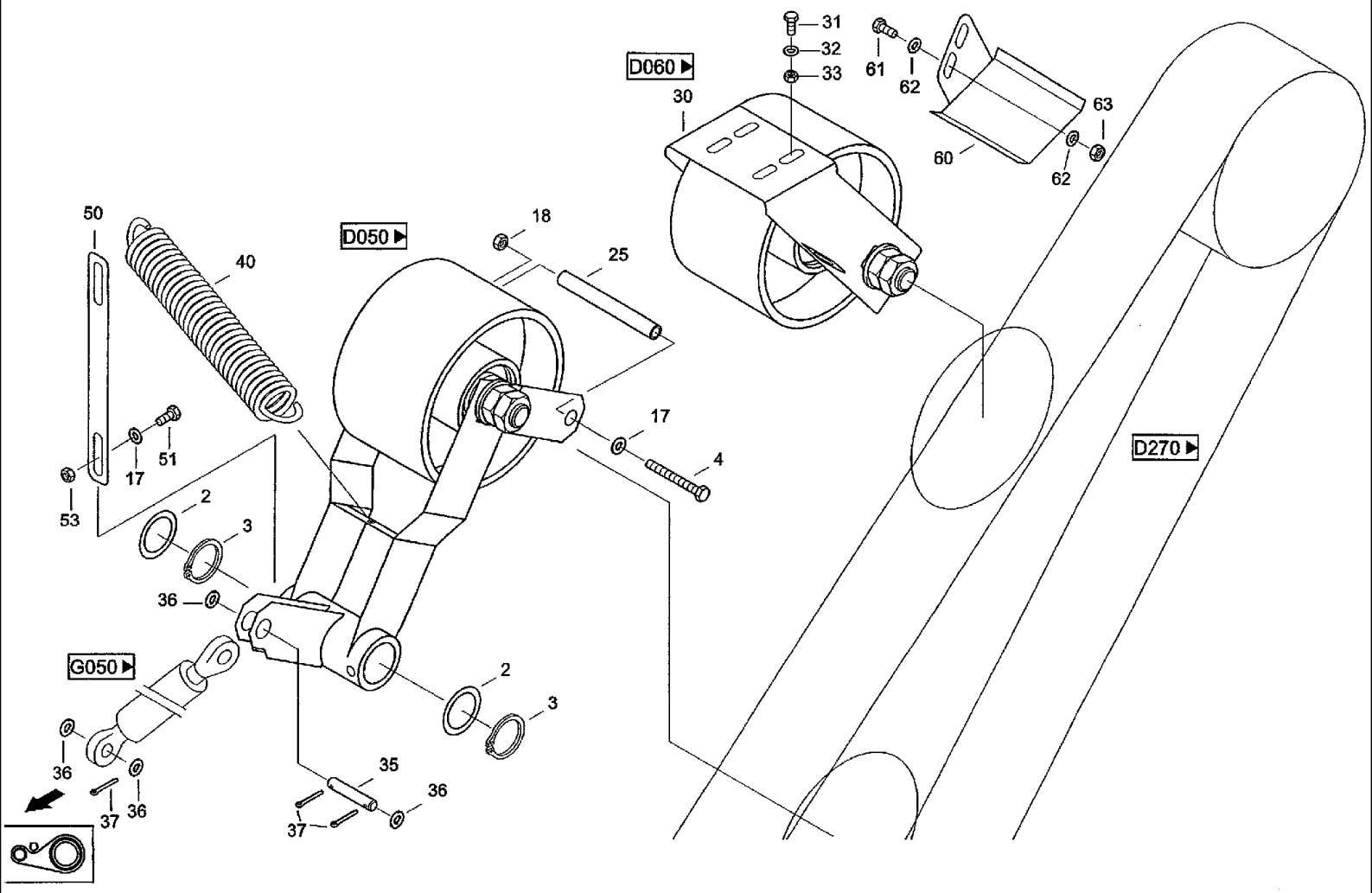

CF80 CASE IH CROSS FLOW COMBINE

D040(01) DRIVE- THRESHING MECHANISM, CLUTCH

Ref	Part Number	Qty	Description
2	021422792	6	DISC, Washer MDW-N14510-42x60x 3-RST Д034-40.00.004 ШАЙБА
3	800-1140	2	RING, SNAP, M40, Ext, Snap ring 40x1,75DIN471 FST
4	06307057	1	SCREW, Hex bolt M10X160 IS04014 10.9
5	061067612	1	PROTECTOR, Guard Д004-01.00.000 ЗАЩИТА
6	614-8025	4	BOLT, Hex, M8 x 25, 8.8,
7	06577044	8	WASHER, SPECIAL, Locking washer B8
8	825-1408	4	NUT, M8, Cl 8,
10	061067661	1	GUIDE, Belt guide OBEN Д004-02.00.000 НАПРАВЛЯЮЩАЯ РЕМНЯ
11	061067733	2	ANGLE, Angle Д004-00.00.001 УГОЛОК
12	614-8025	6	BOLT, Hex, M8 x 25, 8.8,
13	06577044	12	WASHER, SPECIAL, Locking washer B8
14	825-1408	6	NUT, M8, Cl 8,
15	072010715	3	BUSHING, Sleeve Д004-00.00.002 ГИЛЬЗА
16	814-10150	3	BOLT, Hex, M10 x 150, 8.8, Hex bolt M10x150ISO40148.8
17	06577052	4	WASHER, SPECIAL, Locking washer B10
18	825-1410	4	NUT, M10, Cl 8,
20	061067700	1	GUIDE, Belt guide UNTEN Д004-03.00.000 НАПРАВЛЯЮЩАЯ РЕМНЯ
21	061067717	2	ANGLE, Angle Д004-00.00.003 УГОЛОК
22	614-8025	8	BOLT, Hex, M8 x 25, 8.8,
23	06577044	16	WASHER, SPECIAL, Locking washer B8
24	825-1408	8	NUT, M8, Cl 8,
25	072010715	6	BUSHING, Sleeve Г000-20.00.010 ГИЛЬЗА
26	814-10150	5	BOLT, Hex, M10 x 150, 8.8, Hex bolt M10x150ISO40148.8
27	06577052	5	WASHER, SPECIAL, Locking washer B10
28	825-1410	5	NUT, M10, Cl 8,

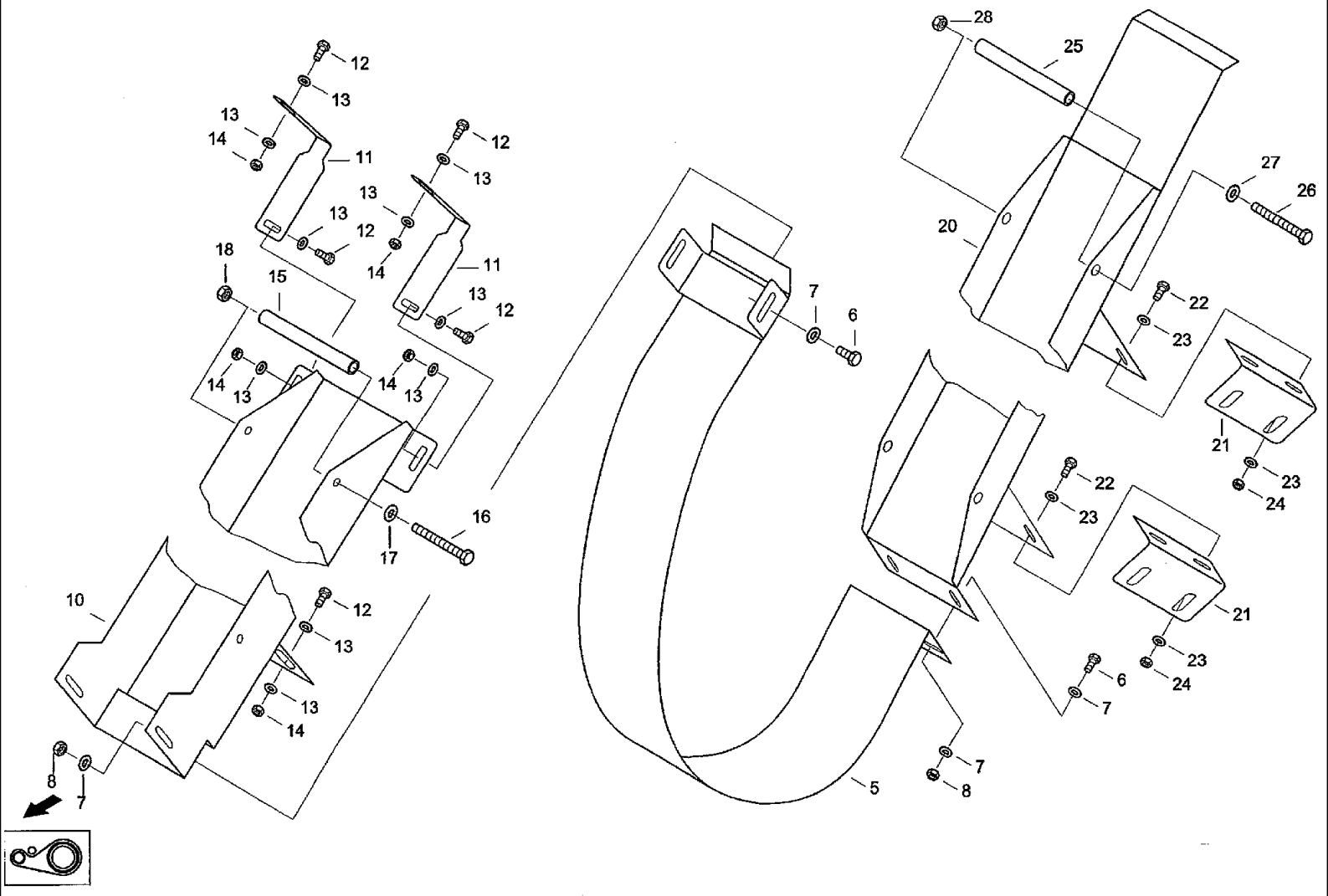
28
25
12
13
27
26
20
14
11
18
15
7
6
22
23
21
24
16
17
10
5
8

CF80 CASE IH CROSS FLOW COMBINE

D040(02) DRIVE- THRESHING MECHANISM, CLUTCH

Ref	Part Number	Qty	Description
30	061067741	1	ROLLER, Guide roller
31	614-10030	4	BOLT, Hex, M10 x 30, 8.8,
32	06577052	4	WASHER, SPECIAL, Locking washer B10
33	825-1410	4	NUT, M10, Cl 8,
35	07611545	1	PIN, LARGE, Bolt B20H1 1x90x74 DIN1443 ST 003780074 ПАЛЕЦ
36	895-11020	5	WASHER, M20 x 37 x 3, Washer 21 DIN125ST СПР-13.00.04
37	06402730	3	PIN, SPLIT (COTTER), Splint pin 5x32 DIN94 ST
40	006700811	1	SPRING, TENSION, Tension spring B5,5x60x25AA Д004-00.00.005 ПРУЖИНА
50	31288076	1	SPACER, Stay
51	614-10025	2	BOLT, Hex, M10 x 25, 8.8, Full Thd, Hex bolt M10x25 ISO4017 8.8
52	06577052	4	WASHER, SPECIAL, Locking washer B10
53	825-1410	2	NUT, M10, Cl 8,
60	31300740	1	SUPPORT, Support Д004-00.00.007 ПРОКЛАДКА
61	614-8025	2	BOLT, Hex, M8 x 25, 8.8,
62	06577044	4	WASHER, SPECIAL, Locking washer B8
63	825-1408	2	NUT, M8, Cl 8,

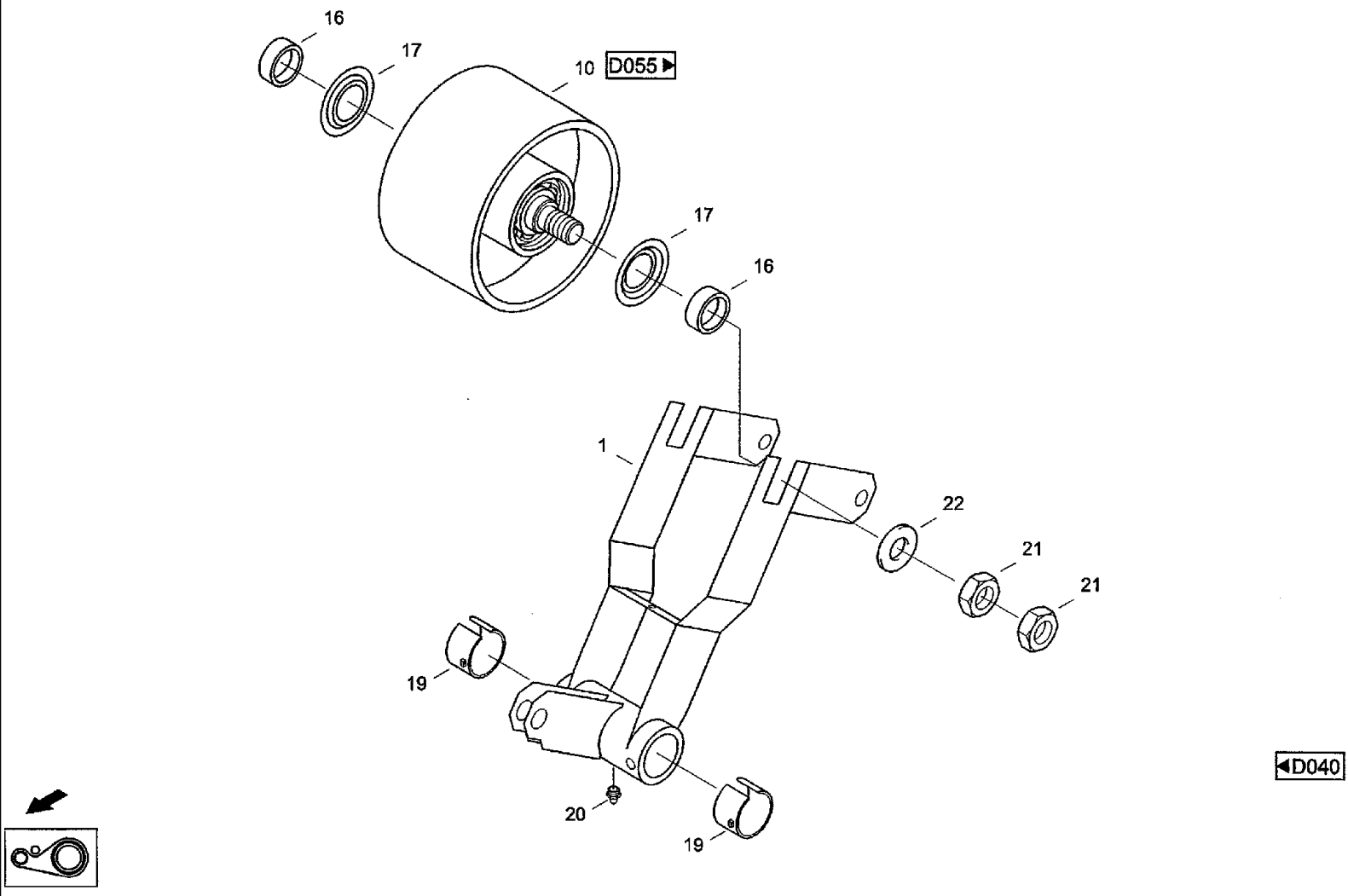
16
17
10
D055
17
16
1
22
21
21
19
20
19
D040

CF80 CASE IH CROSS FLOW COMBINE

D050 DRIVE- ROCKER

Ref	Part Number	Qty	Description	
1	061067598	1	LEVER, ROCKER, Swivel lever	Д005-01.00.000 ПОВОРОТНЫЙ РЫЧАГ
10	072010731	1	TIGHTENER SHEAVE, Idler	
16	072010748	2	BUSHING, Sleeve	
17	060105210	2	SEAL WASHER, Seal ring	
19	020464544	2	BUSHING, Bushing GLEITBUCHSE	
20	03617056	1	NIPPLE, LUBE, Grease nippel AM8x1 DIN71412	
21	06222405	2	NUT, Hex nut M24X2 ISO8675 05	
22	895-11024	1	WASHER, M24 x 44 x 4, Washer 25DIN125ST	

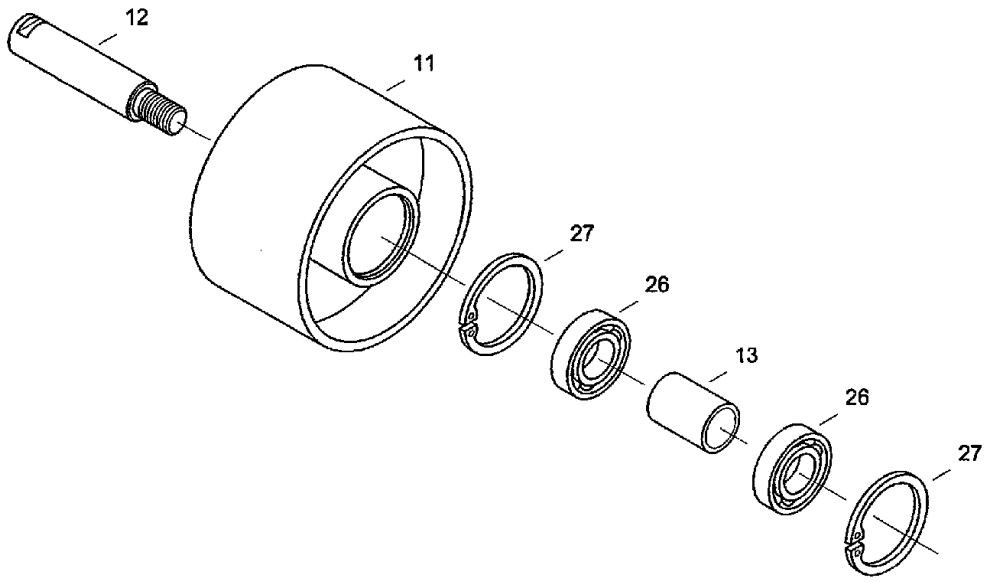

◀D050
◀D060

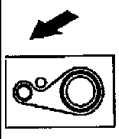

CF80 CASE IH CROSS FLOW COMBINE

D055 DRIVE- IDLER

Ref	Part Number	Qty	Description	
11	072010780	2	TIGHTENER SHEAVE, Roller	Д007-00.00.001 РОЛИК
12	072010797	2	PIN, LARGE, Bolt	Д034-40.10.005 ПАЛЕЦ
13	072010803	2	SPACER, Spacer bushing	Д034-40.10.003 РАСПОРНАЯ ВТУЛКА
26	03671816	4	BEARING ASSY, Grooved ball bearing 6207-RS DIN625 LE	
27	800-2172	4	CIRCLIP, Snap ring 72x2,5 DIN472 FST	

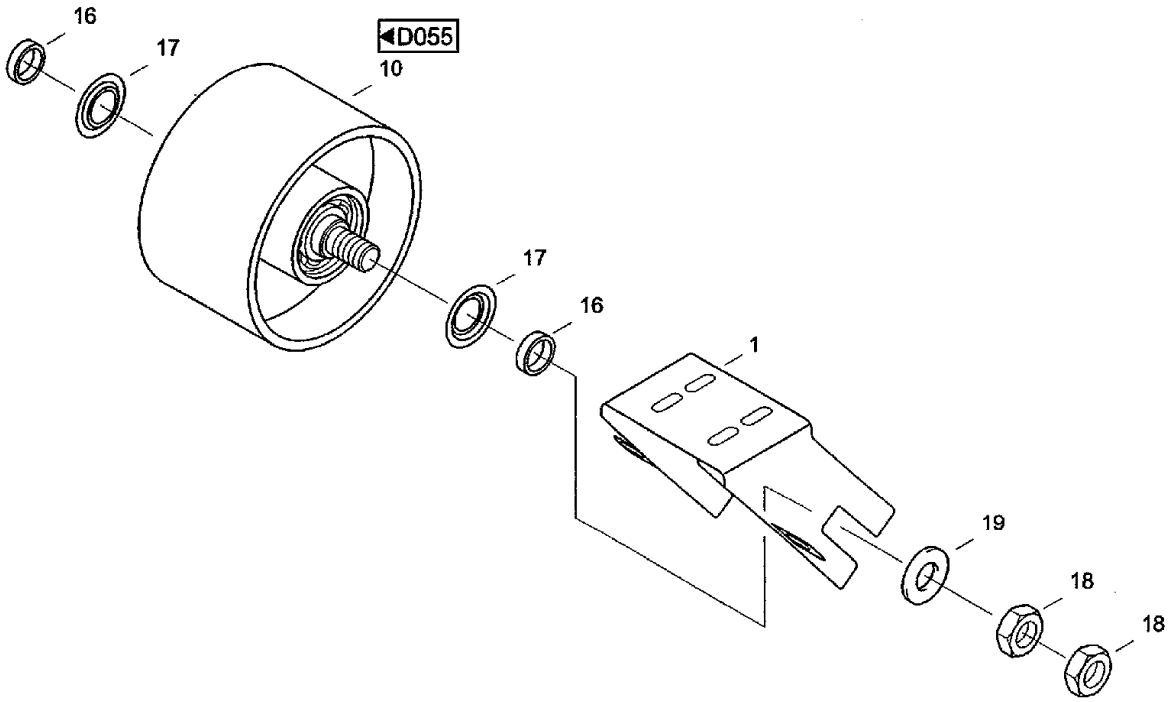
16
17
D055
10
17
16
1
19
18
18
D040

CF80 CASE IH CROSS FLOW COMBINE

D060 DRIVE- GUIDE ROLLER

Ref	Part Number	Qty	Description	
1	061067758	1	SUPPORT, Coupling	Д006-01.00.000 ДЕРЖАТЕЛЬ
10	072010731	1	TIGHTENER SHEAVE, Idler	Д007-00.00.000 НАТЯЖНОЙ РОЛИК
16	072010748	2	BUSHING, Sleeve	Д034-40.10.003-01 ВТУЛКА
17	060105210	2	SEAL WASHER, Seal ring	Д034-40.10.002 УПЛОТНИТЕЛЬНАЯ ШАЙБА
18	06222405	2	NUT, Hex nut M24x2 ISO8675 05	
19	895-11024	1	WASHER, M24 x 44 x 4, Washer 25 DIN125 ST	СПУ-8 ШАЙБА

D090 ▶

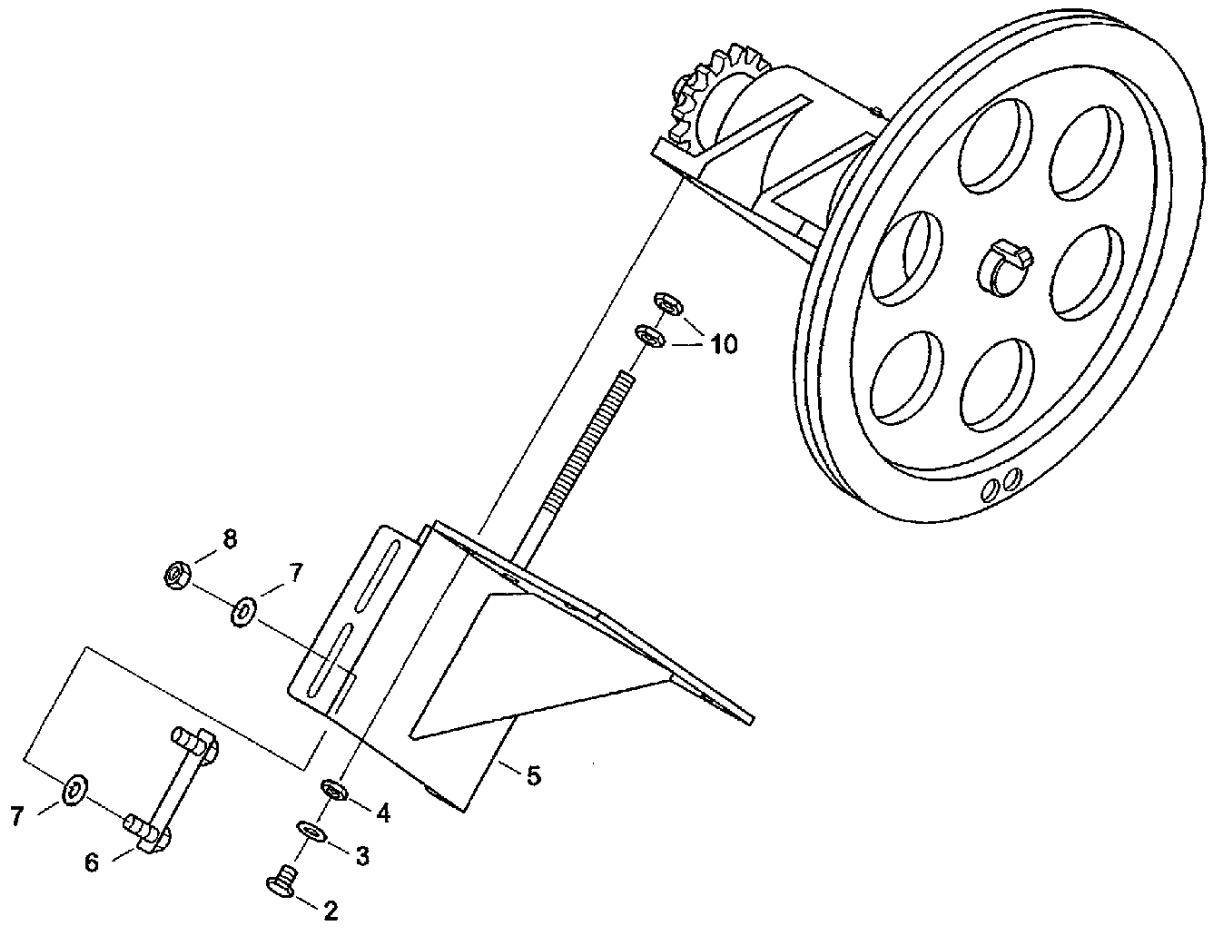

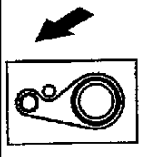

CF80 CASE IH CROSS FLOW COMBINE

D080 DRIVE- EAR ELEVATOR ASSEMBLY, TRANSMISSION

Ref	Part Number	Qty	Description
2	614-10035	6	SCREW, Hex, M10 x 35, 8.8, Full Thd,
3	06577052	4	WASHER, SPECIAL, Locking washer B10
4	825-1410	4	NUT, M10, Cl 8,
5	31287411	1	SUPPORT, Bracket Д008-01.00.000 КРЕПЛЕНИЕ
6	31287774	2	PLATE, LARGE, Bolt-on plate
7	06577052	6	WASHER, SPECIAL, Locking washer B10
8	825-1410	6	NUT, M10, Cl 8,
10	825-1412	2	NUT, M12, Cl 8, Hex nut M12 ISO4032 8

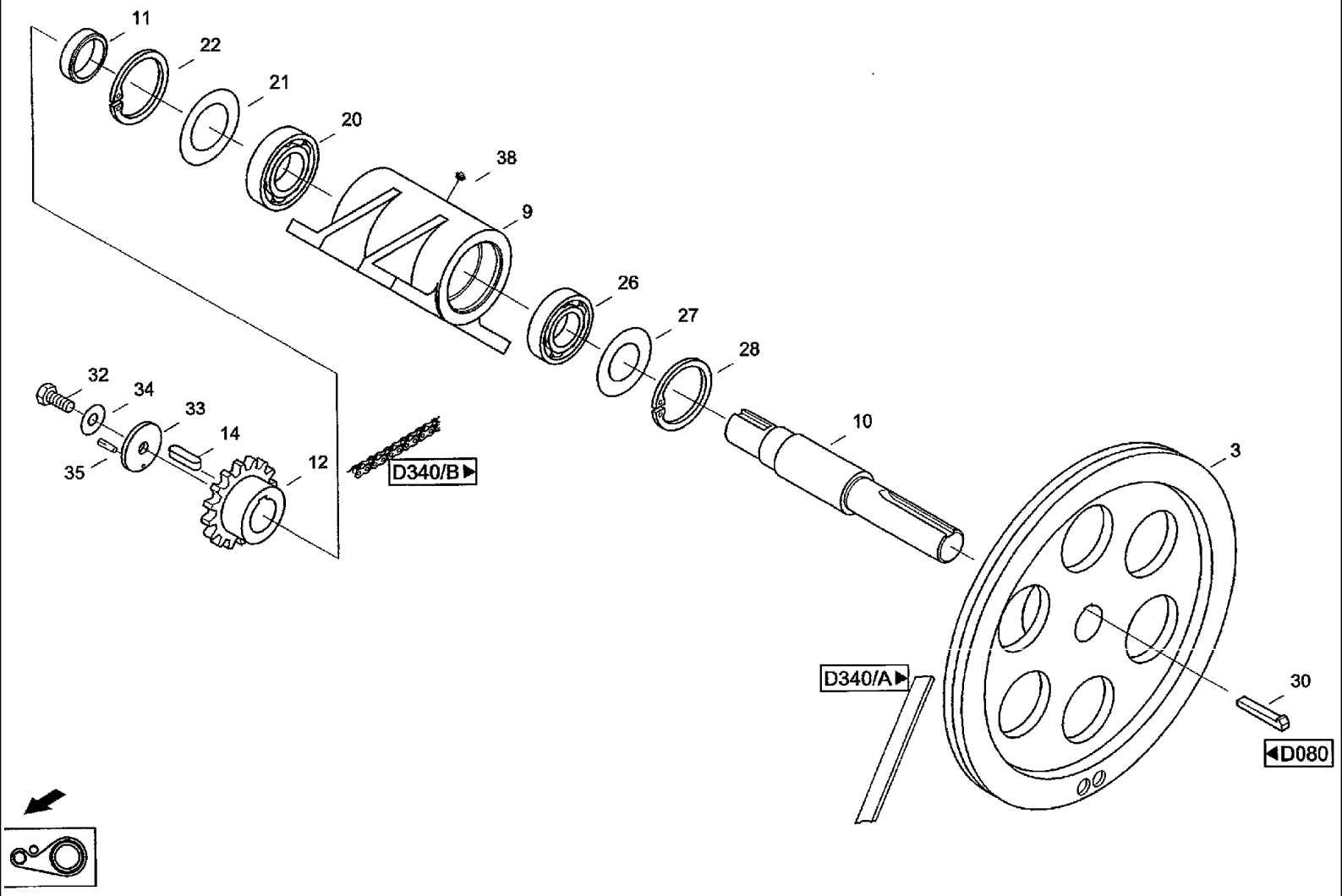
11
22
21
20
38
9
26
27
28
10
3
32
34
33
14
35
12
D340/B
D340/A
30
D080

CF80 CASE IH CROSS FLOW COMBINE

D090 DRIVE- TRANSMISSION

Ref	Part Number	Qty	Description
3	05305425	1	GROOVED PULLEY, V-belt pulley Д009-00.00.001 ШКИВ
9	060100327	1	SUPPORT, Bearing bracket RZ 060 100376 Д009-01.00.000 КОРПУС
10	31286982	1	SHAFT, Shaft Д009-00.00.002 ВАЛ
11	31287268	1	RING, Ring Д009-00.00.003 КОЛЬЦО
12	02846140	1	DRIVE SPROCKET, Sprocket Д009-00.00.004 ЗВЕЗДОЧКА
14	97031085	1	KEY, BUCKET TOOTHRT, Flat key A1 0x8x40 DIN6885 ST ШПОНКА
20	03652114	1	BEARING, Grooved ball bearing 6208-RS DIN625
21	020216361	1	SEAL WASHER, Seal ring 50,5x79,5x0,3 Д009-00.00.005 УПЛОТНИТЕЛЬНАЯ ШАЙБА
22	800-2180	1	RING, SNAP, M80, Int, Snap ring 80x2,5 DIN472 FST
26	03652067	1	BEARING, Grooved ball bearing 6207 DIN625 LE
27	020211742	1	SEAL WASHER, Seal ring 40,3x71x0,3 Д009-00.00.006 УПЛОТНИТЕЛЬНАЯ ШАЙБА
28	800-2172	1	CIRCLIP, Snap ring 72x2,5 DIN472 FST
30	003502407	1	KEY, Gib-head key 10x8x50 DIN6887
32	614-10030	1	BOLT, Hex, M10 x 30, 8.8,
33	06602360	1	DISC, End washer TGL17481-(D11x50)
34	97027869	1	PLATE, LOCKING, Washer 10.5DIN432ST
35	06135535	1	PIN, Notched dowel (4x14)-ST DIN 1472
38	03617056	1	NIPPLE, LUBE, Grease nippel AM8x1 DIN71412
39		1	ВТУЛКА Д009-00.00.003
40		1	ШАЙБА Д009-00.00.008
41		1	ФЛАНЕЦ Д009.00.009
42		1	ПРУЖИНА Д009-00.00.010
43		1	ШАЙБА УПОРНАЯ Д009-00.00.011
44		1	ШАЙБА Д009-00.00.012
45		2	ПОЛУМУФТА Д009-00.00.015

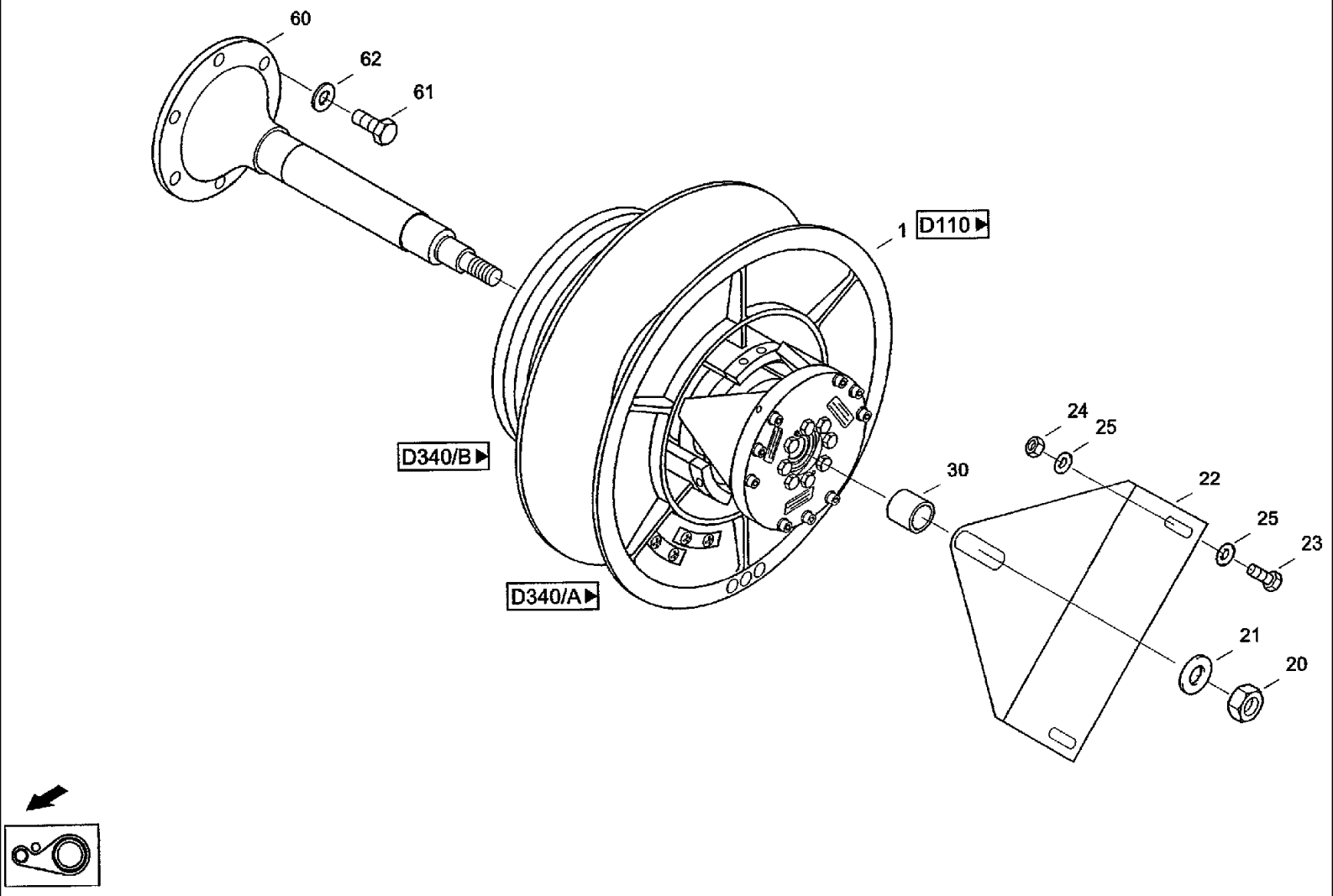
60
62
61
1
D110
D340/B
D340/A
30
24
25
22
25
23
21
20

CF80 CASE IH CROSS FLOW COMBINE

D100 DRIVE- OUTPUT SHAFT VARIATOR, TRANSMISSION

Ref	Part Number	Qty	Description
1	061053664	1	PULLEY, Output shaft variator
20	825-1424	1	NUT, M24, Cl 8, Hex nut M24 ISO4032 8
21	06577157	1	PLATE, LOCKING, Locking washer M24
22	061053680	1	ANGLE, Angle Д010-00.00.001 УГОЛОК
23	614-12030	2	BOLT, Hex, M12 x 30, 8.8, Hex bolt M12x30ISO40178.8
24	825-1412	2	NUT, M12, Cl 8, Hex nut M12 ISO4032 8
25	06577060	4	WASHER, Locking washer B12
30	061053576	1	SLEEVE, Sleeve Д010-00.00.002 ВТУЛКА
60	061053584	1	SHAFT, Shaft Д010-10.00.000 ВАЛ
61	614-16035	6	BOLT, Hex, M16 x 35, 8.8, Hex, M16 x 35, 8.8, ISO4017
62	06577093	6	WASHER, LOCK, Locking washer

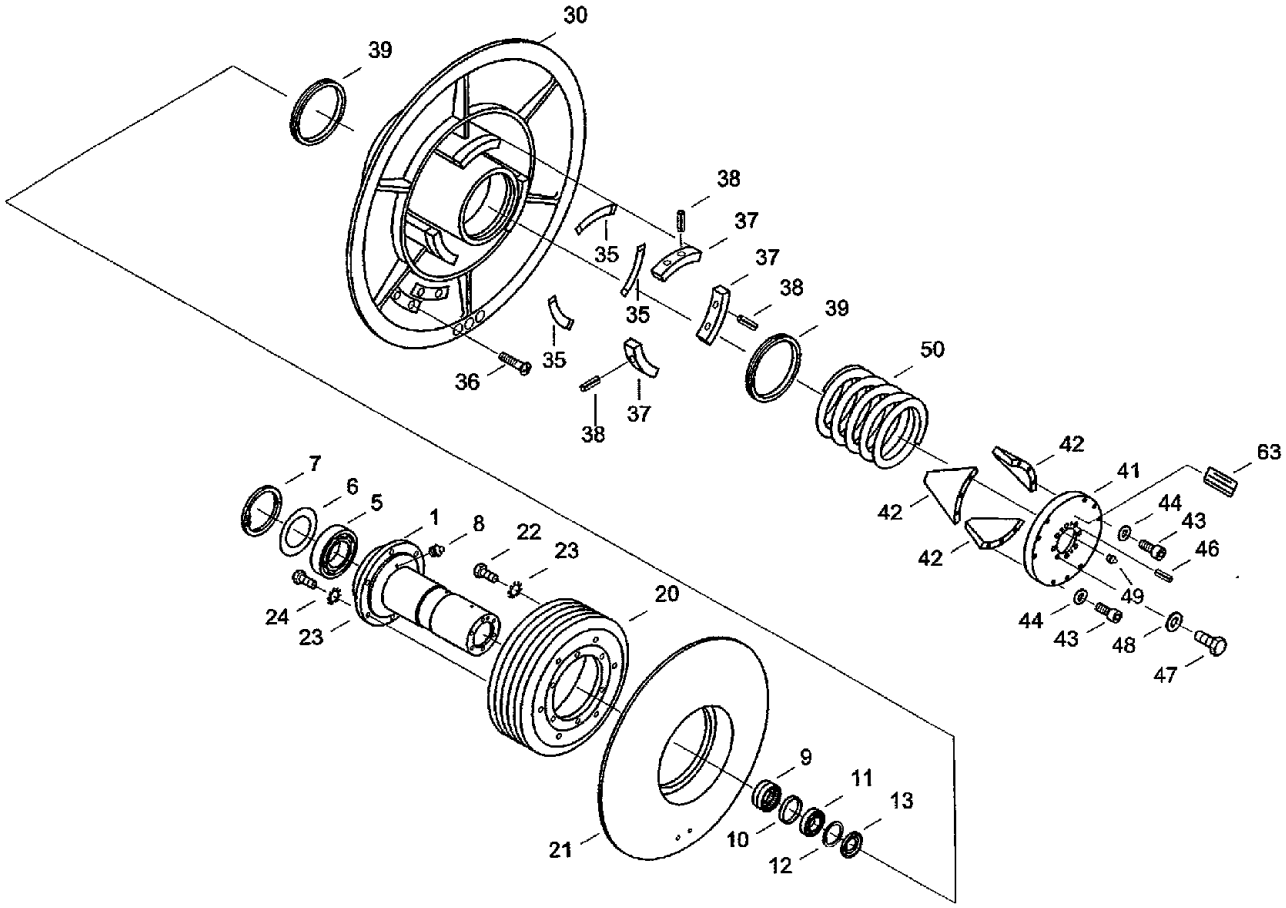
30
39
38
37
35
37
38
35
39
50
35
36
37
38
42
41
63
42
44
43
42
46
49
44
43
48
47
7
6
5
1
8
22
23
24
23
20
9
11
13
21
10
12

◀D100

CF80 CASE IH CROSS FLOW COMBINE

D110(01) DRIVE- OUTPUT SHAFT VARIATOR

Ref	Part Number	Qty	Description
1	061053592	1	BUSHING, Bushing
5	003653461	1	BEARING, Grooved ball bearing 6311-RSDIN625
6	061053607	1	RING, PACKING, Seal ring 77x119x0,3
7	800-21120	1	SNAP RING, M120, Int, Snap ring 120x4 DIN472 FST
8	03637285	1	NIPPLE, LUBE, Grease nippel AM6 DIN71412
9	060532814	1	BEARING, NEEDLE, Needle bearing NK50/25
10	061053615	1	BUSHING, Sleeve
11	03651363	1	BEARING ASSY, Grooved ball bearing 6007 DIN625
12	800-2162	1	RING, SNAP, M62, Int, Snap ring 62x2 DIN472 FST
13	060532822	1	SEAL, Shaft seat A45x62x8-NBR DIN3760
20	061053623	1	GROOVED PULLEY, V-belt pulley
21	061053375	1	DISC, Fixed pulley KPL
22	06372145	6	SCREW, Hex bolt M1 2x1,5x30ISO867610.9
23	893-11012	12	WASHER, LOCK, Ext Tooth, M12, Toothed washer A13 DIN6797 FST
24	006374403	6	SCREW, Hex bolt M12x1,5x35ISO867610.9
30	061053551	1	DISC, Loose pulley KPL.
35	061075251	1	PLATE, Backing
36	97010283	3	SCREW, Countersunk screw M6x16 DIN7991 8.8
37	061053543	3	BLOCK DRIVER, Follower
38	060532855	6	PIN, Roll pin 6x16 DIN1481
39	060532806	2	RING, Wiper seal KWS17570-A105-NBR 90
41	061053648	1	CUP, SPRING, Washer
42	061053656	3	SEGMENT, Segment
43	864-8040	9	SCREW, Hex Soc Hd, M8 x 40, 8.8, Cheese-head screw M8x40DIN9128.8
44	06577028	9	WASHER, SPECIAL, Locking washer M8

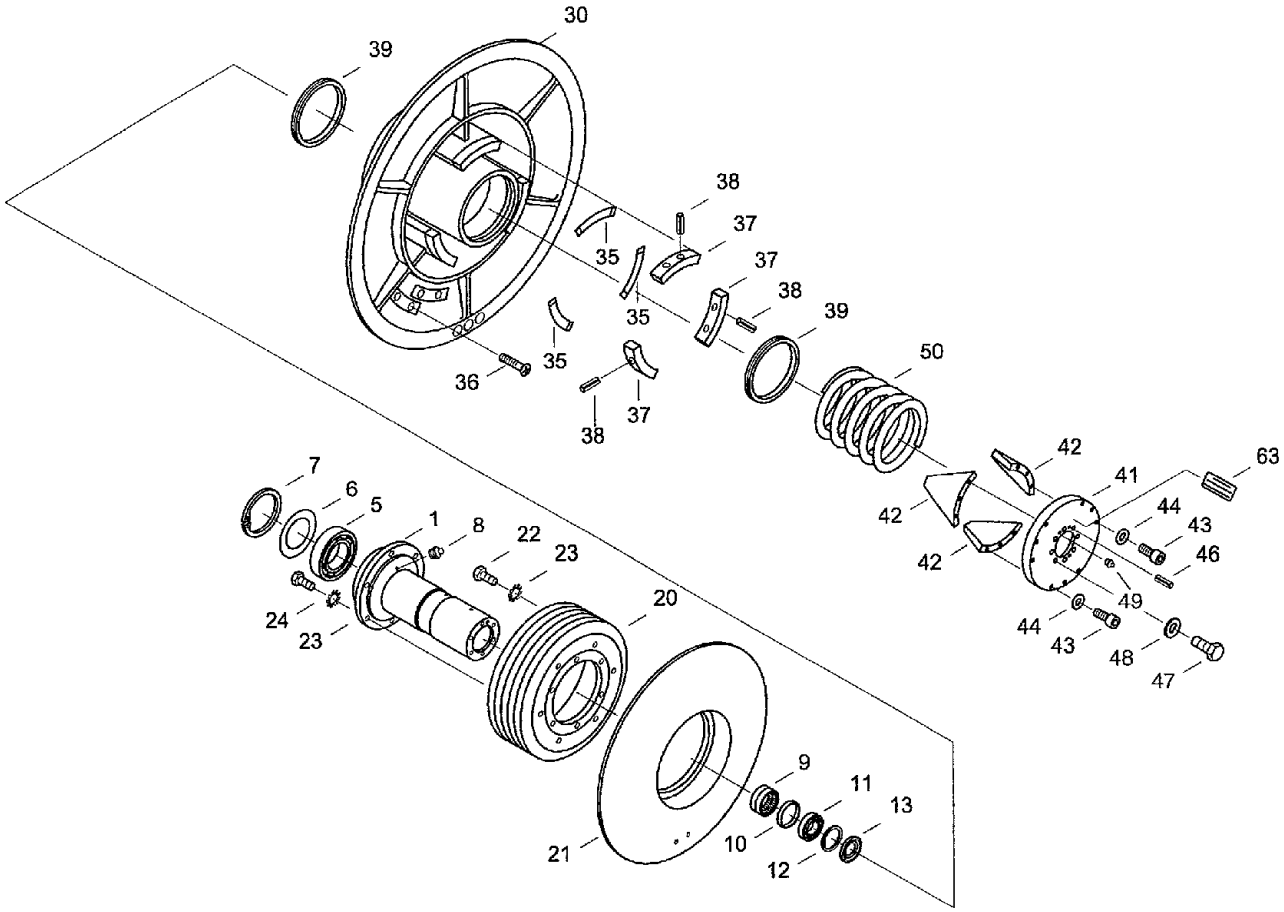
30
39
38
37
35
37
38
35
39
50
36
35
37
38
42
41
63
42
44
43
42
46
49
44
43
48
47
7
6
5
1
8
22
23
24
23
20
9
11
13
21
10
12

D100

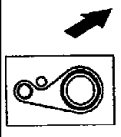

CF80 CASE IH CROSS FLOW COMBINE

D110(02) DRIVE- OUTPUT SHAFT VARIATOR

Ref	Part Number	Qty	Description
46	838-5830	2	PIN, M8 x 30, Slotted, Roll pin 8x30 DIN1481 FST
47	060532847	8	SCREW, Hex bolt M1 0x1x351308676 10.9
48	06577003	8	WASHER, SPECIAL, Locking washer M10
49	03637285	1	NIPPLE, LUBE, Grease nippel AM6 DIN71412
50	061053568	1	SPRING, COMPRESSION, Pressure spring C16x1 70x7,5
63	09169574	1	ADHESIVE, Symbol DECK.U.EXTR.FEDERSP.

D140(01) DRIVE- COUNTER SHAFT

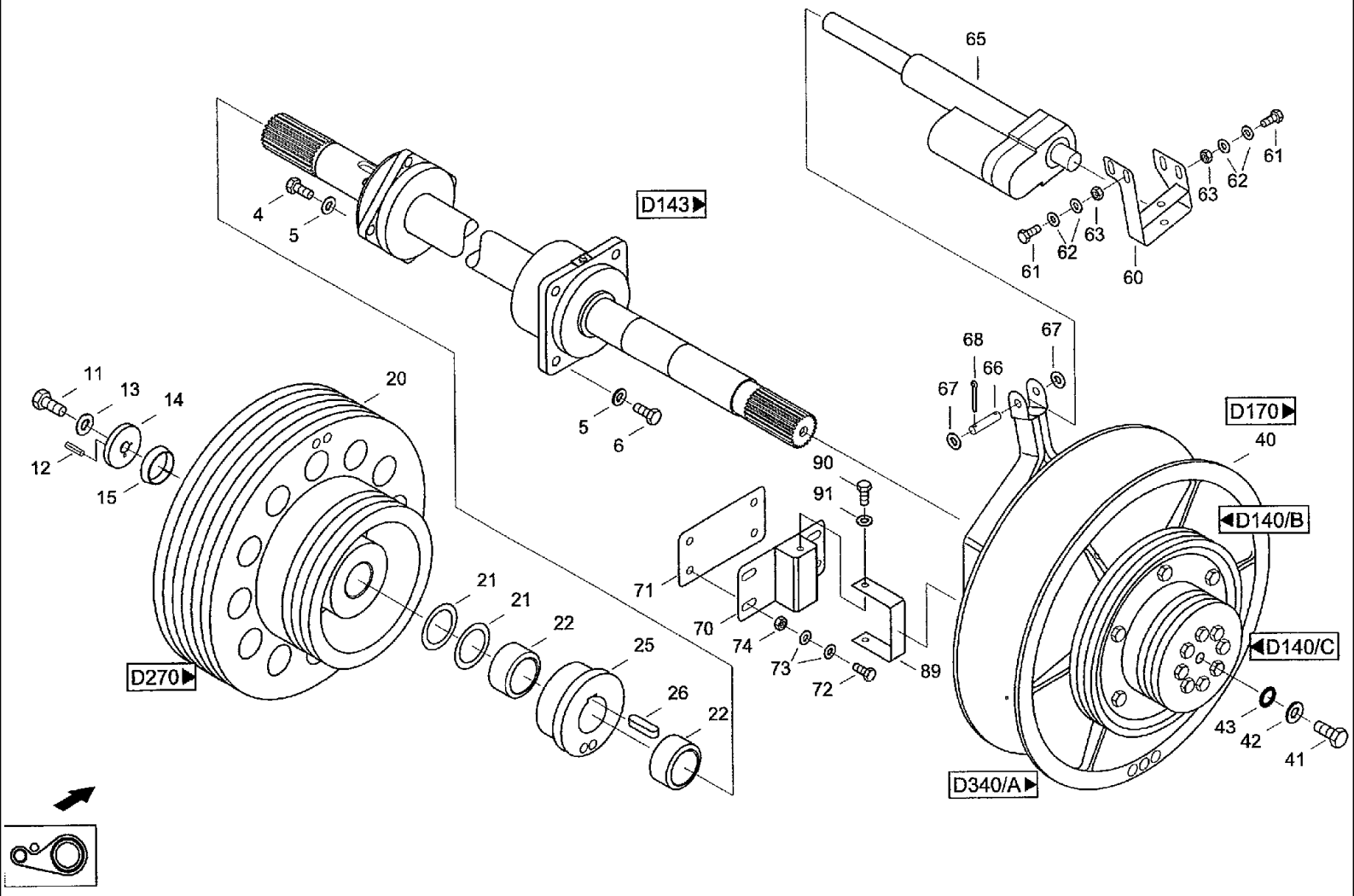

CF80 CASE IH CROSS FLOW COMBINE

D140(01) DRIVE- COUNTER SHAFT

Ref	Part Number	Qty	Description	
4	614-12035	4	BOLT, Hex, M12 x 35, 8.8, Full Thd, Hex bolt M12x35IS040178.8	
5	06577060	8	WASHER, Locking washer B12	
6	614-12045	4	BOLT, Hex, M12 x 45, 8.8, Hex bolt M12X45ISO40178.8	
11	06377816	1	SCREW, Hex bolt M16x1 ,5x45ISO867610.9	
12	06142093	1	PIN, Notched dowel 4x30 DIN 1473 ST	
13	06461468	1	WASHER, Washer 17DIN432ST	
14	31332530	1	END, End washer I	
15	31332547	1	RING, Cone	
20	31332643	1	GROOVED PULLEY, V-belt pulley Rz 31 325058	Д014-00.00.002 ШКИВ
21	072010475	2	WASHER, Washer	Д014-00.00.010 ШАЙБА
22	061067397	2	BUSHING, Sleeve	Д014-00.00.004 ВТУЛКА
25	061067403	1	GROOVED PULLEY, V-belt pulley	Д014-00.00.003 ШКИВ
26	060533413	1	KEY, BUCKET TOOTHRT, Flat key A18x11x50DIN6885	
40	31348868	1	PULLEY, Variator	
41	006372178	1	SCREW, Hex bolt M1 6x1, 5x40 ISO8676 10.9	
42	06577093	1	WASHER, LOCK, Locking washer M16	
43	04103618	1	GASKET, Seal A16x22 DIN7603 VF	
60	31286484	1	SUPPORT, Engine seat	Д014-30.00.000 КРЕПЛЕНИЕ ДВИГАТЕЛЯ
61	614-10030	4	BOLT, Hex, M10 x 30, 8.8,	
62	06577003	8	WASHER, SPECIAL, Locking washer M10	
63	825-1410	4	NUT, M10, Cl 8,	
65	060533405	1	DRIVE, Elevating screw drive D24-21B5-06	
66	060521024	2	PIN, LARGE, Bolt B12H11x55-ST-A3C DIN 1444	Д014-00.00.009 ПАЛЕЦ
67	895-11012	4	WASHER, M12 x 24 x 2.5, Washer 13DIN125ST	
68	06402394	4	PIN, SPLIT (COTTER), Splint pin 3,2x22 DIN94 ST	

D140(02) DRIVE- COUNTER SHAFT

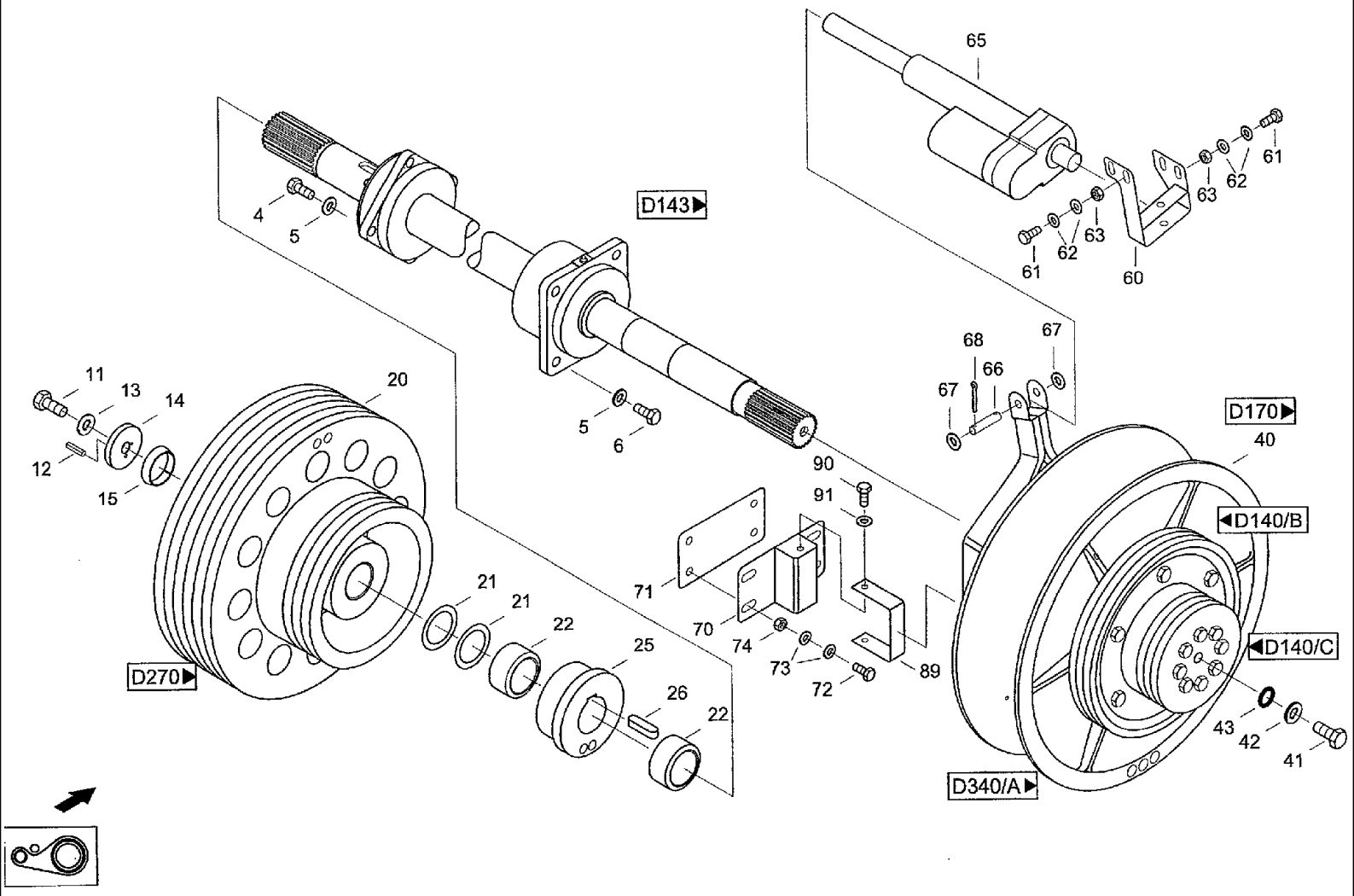

CF80 CASE IH CROSS FLOW COMBINE

D140(02) DRIVE- COUNTER SHAFT

Ref	Part Number	Qty	Description
70	31286515	1	SUPPORT, Support Д014-20.00.000 ДЕРЖАТЕЛЬ
71	31286580	1	BLOCK, Shim Д014-00.00.007 ПОДКЛАДКА
72	614-12030	4	BOLT, Hex, M12 x 30, 8.8, Hex bolt M12x30 ISO4017 8.8
73	06577011	8	PLATE, LOCKING, Locking washer M12
74	825-1412	4	NUT, M12, Cl 8, Hex nut M12 ISO4032 8
89	31286837	1	STIRRUP, Bracket Д014-00.00.006 СКОБА
90	614-10025	2	BOLT, Hex, M10 x 25, 8.8, Full Thd, Hex bolt M10x25ISO40178.8
91	06577052	2	WASHER, SPECIAL, Locking washer B10

D143 DRIVE- SHAFT

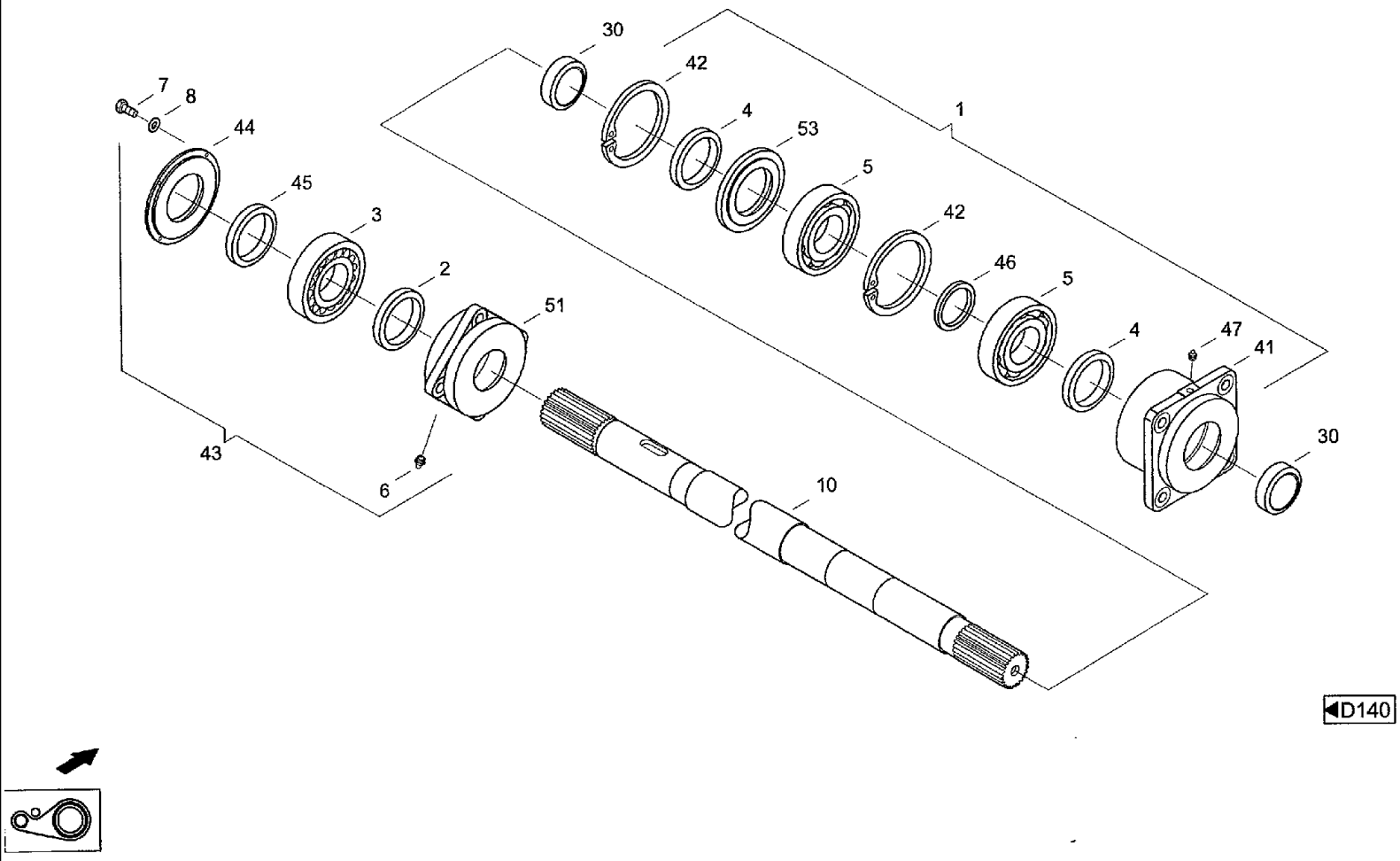

CF80 CASE IH CROSS FLOW COMBINE

D143 DRIVE- SHAFT

Ref	Part Number	Qty	Description
2	009160951	1	RING, Felt ring 65-F2DIN5419
3	060532935	1	BEARING, Spherical roller bearing 20312T DIN635
4	060530074	2	RING, Felt ring 75-F2DIN5419
5	03657633	2	BEARING, Grooved ball bearing 6312-RS DIN625
6	03617056	1	NIPPLE, LUBE, Grease nippel AM8x1 DIN71412
7	06334582	4	SCREW, Hex bolt M5x14IS040178.8
8	060505321	4	PLATE, LOCKING, Locking washer M5
10	061067372	1	SHAFT, Shaft Д014-00.00.001 ВАЛ
30	061067411	2	BUSHING, Sleeve Д014-00.00.005 ВТУЛКА
41	061067227	1	HOUSING, BEARING, Bearing body Д015-00.00.001 КОРПУС ПОДШИПНИКА
42	800-21130	2	RING, SNAP, M130, Int, Snap ring 130X4DIN472FST
43	061067243	1	BEARING, Bearing
44	061067268	1	COVER, Bearing cover
45	060530074	1	RING, Felt ring 75-F2DIN5419
46	061067235	1	BUSHING, Sleeve Д015-00.00.003 ВТУЛКА
47	03617064	1	NIPPLE, LUBE, Grease nippel AM10x1 DIN71412
51	061067251	1	HOUSING, BEARING, Housing Д016-00.00.001 КОРПУС
53	061067276	1	SUPPORT, Seal, retainer Д015-00.00.002 ОБОЙМА

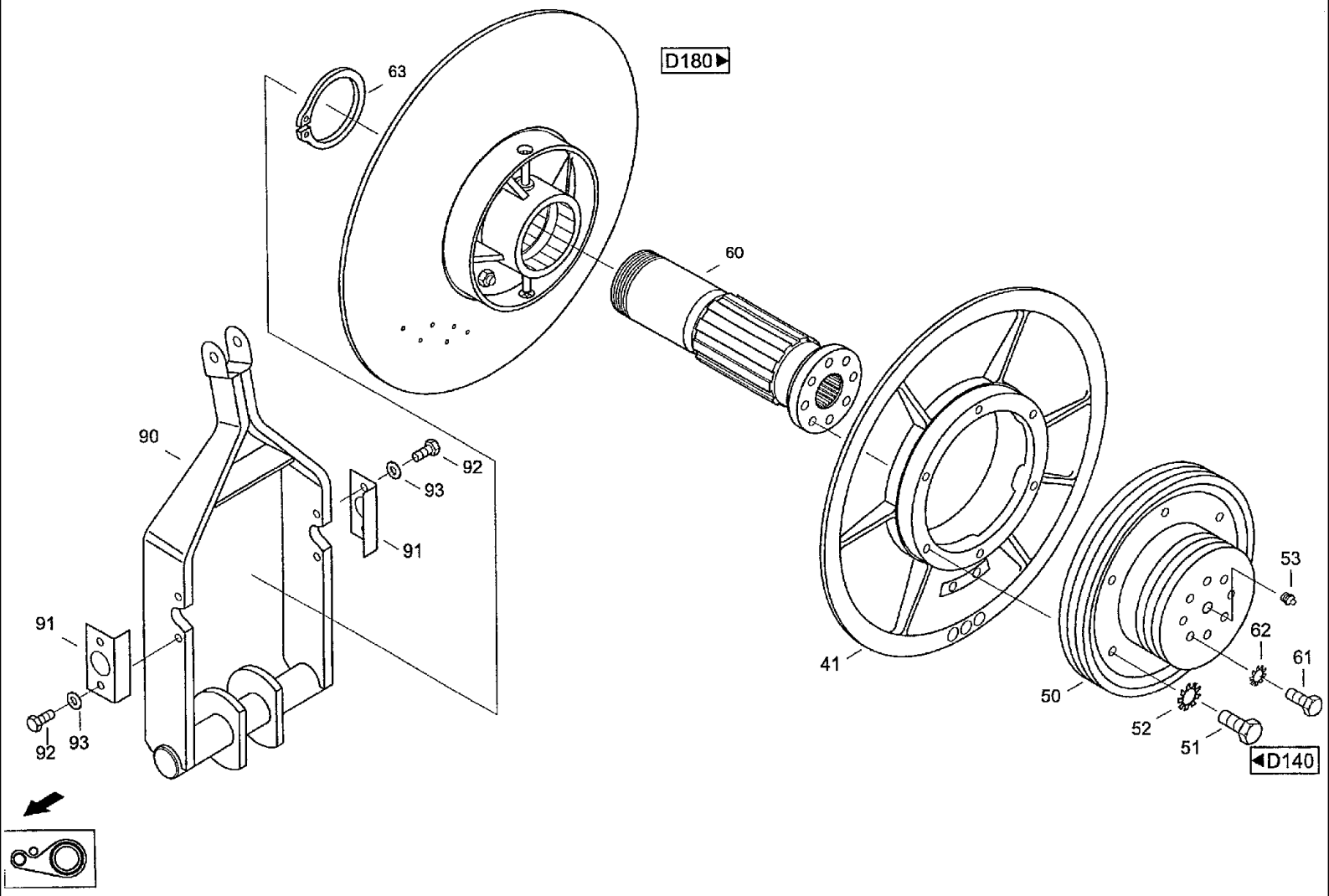
D180▶
63
60
90
92
93
91
91
92
93
41
53
62
61
50
52
51
◀D140

CF80 CASE IH CROSS FLOW COMBINE

D170 DRIVE- VARIATOR

Ref	Part Number	Qty	Description
41	061053375	1	DISC, Fixed pulley KPL.
50	31348843	1	GROOVED PULLEY, V-belt pulley
51	006374171	6	SCREW, Hex bolt M12x1,5x25ISO867610.9
52	893-11012	6	WASHER, LOCK, Ext Tooth, M12, Toothed washer A13 DIN6797 FST
53	03617056	1	NIPPLE, LUBE, Grease nippel AM8x1 DIN71412
60	31348851	1	BUSHING, Bushing
61	06372145	8	SCREW, Hex bolt M12x1,5x30 ISO8676 10.9
62	893-11012	8	WASHER, LOCK, Ext Tooth, M12, Toothed washer A13DIN6797FST
63	800-1190	1	RING, SNAP, M90, Ext, Snap ring 90x3 DIN471 FST
90	31286427	1	FORK, Fork Д014-10.00.000 ВИЛКА
91	020472126	2	ANGLE BAR, Angle Д014-00.00.008 УГОЛОК
92	614-10016	4	BOLT, Hex, M10 x 16, 8.8, Full Thd, Hex bolt M 10x16150401 7 8.8
93	06577052	4	WASHER, SPECIAL, Locking washer B10

D180 DRIVE- VARIATOR PULLEY HALF, INNER

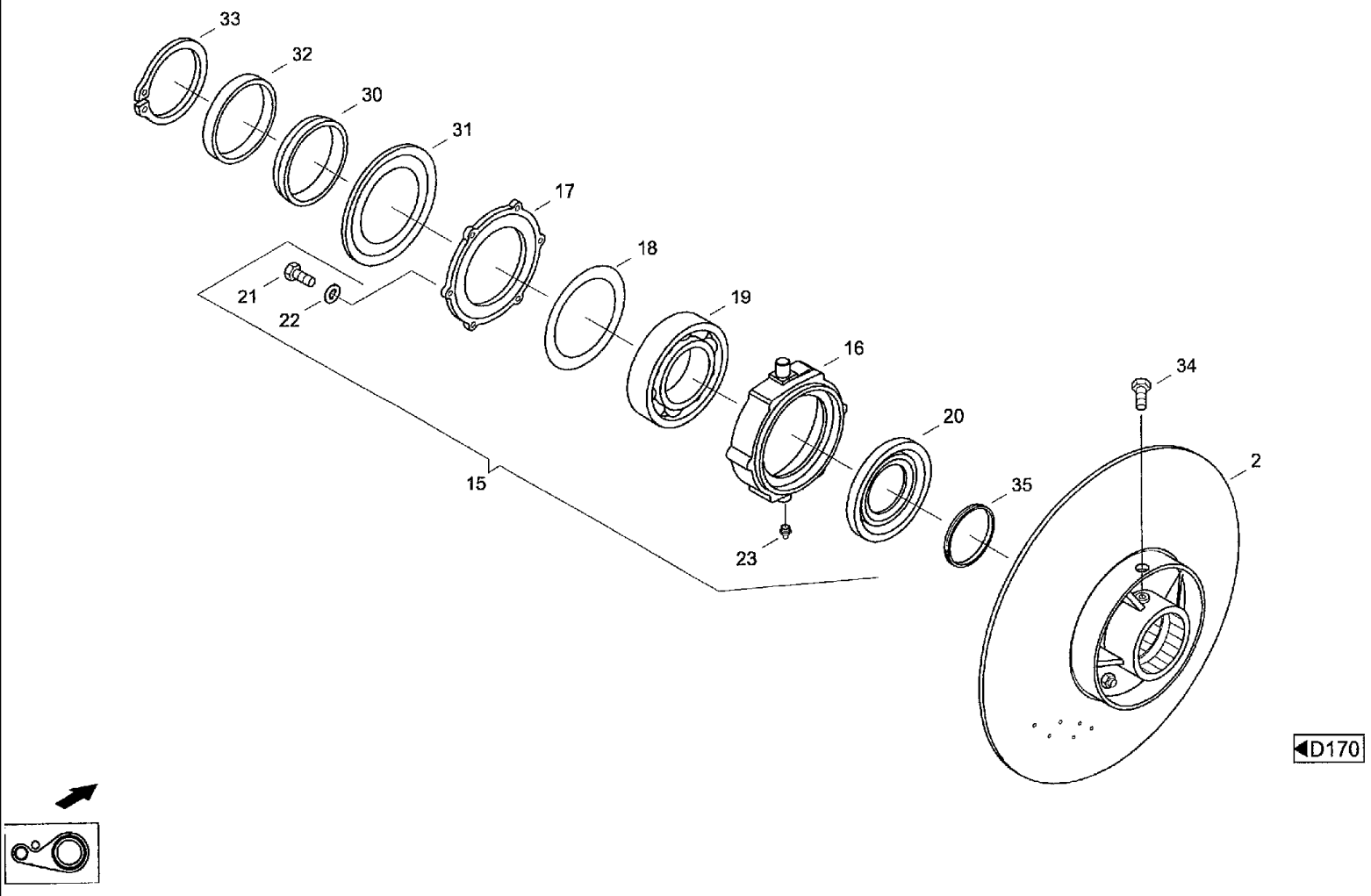

CF80 CASE IH CROSS FLOW COMBINE

D180 DRIVE- VARIATOR PULLEY HALF, INNER

Ref	Part Number	Qty	Description
2	31348827	1	DISC, Loose pulley k
15	061053350	1	CONTROL, Control element
16	020472183	1	CASE, Housing RZ 0204721 91
17	020472206	1	COVER, Cap RZ 020472214
18	020508686	1	SEAL WASHER, Seal ring 136x179x0,5
19	003651757	1	BEARING, Grooved ball bearing 6024-C3 DIN625
20	001125675	1	SEAL, Shaft seal TGL16454-(D135x17 OX14)-NBR
21	614-8020	6	BOLT, Hex, M8 x 20, 8.8, Hex bolt M8x20 ISO4017 8.8
22	06577044	6	WASHER, SPECIAL, Locking washer B8
23	03617064	1	NIPPLE, LUBE, Grease nippel AM10x1 DIN71412
30	020508645	1	SLEEVE ASSY, Liner
31	020508661	1	CROSSMEMBER, Shroud plate
32	061053510	1	RING, Ring
33	800-11120	1	RING, SNAP, M120, Ext, Snap ring 120x4DIN471 FST
34	31349098	2	SCREW, Hex bolt M10x1x12 ISO86768.8
35	001142772	1	RING, SCRAPER, Wiper seal TGL17570-A90-NBR90

D220(01) DRIVE- TANK UNLOADER CLUTCH

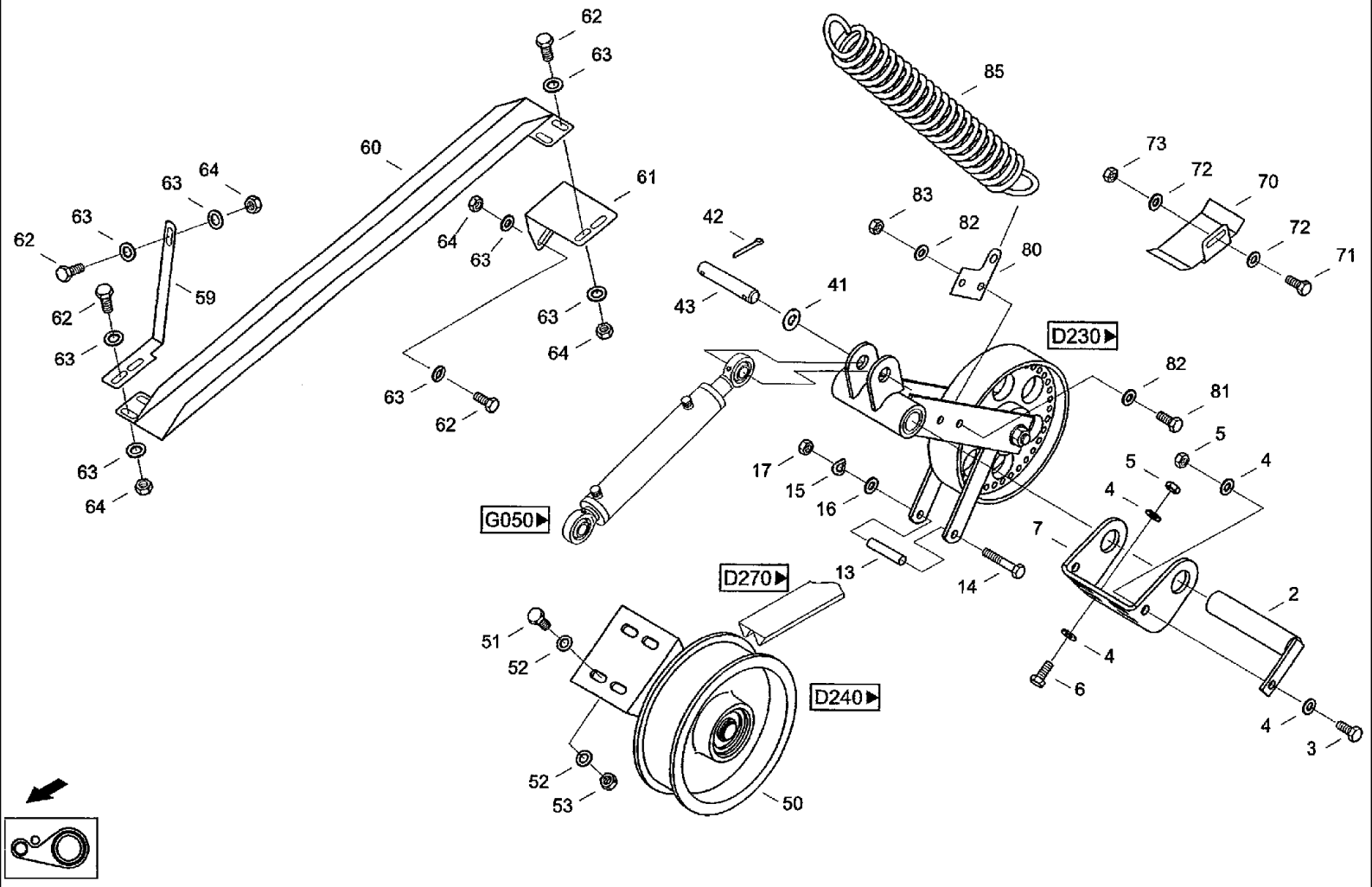

CF80 CASE IH CROSS FLOW COMBINE

D220(01) DRIVE- TANK UNLOADER CLUTCH

Ref	Part Number	Qty	Description
1	061071633	1	PITMAN ASSY., Rocker
2	020508508	1	AXLE, Axle Д022-01.00.000 ОСЬ
3	614-10020	1	BOLT, Hex, M10 x 20, 8.8, Full Thd,
4	06577052	9	WASHER, SPECIAL, Locking washer B10
5	825-1410	5	NUT, M10, Cl 8,
6	614-10060	4	BOLT, Hex, M10 x 60, 8.8, Full Thd, Hex bolt M10x60ISO40178.8
7	31285194	1	SUPPORT, Bearing
13	060051550	1	SLEEVE, Sleeve Д022-00.00.002 ГИЛЬЗА
14	814-8080	1	BOLT, Hex, M8 x 80, 8.8, Hex bolt M8x80 ISO4014 8.8
15	06501380	1	WASHER, CUP, Wave washer spring B8 DIN 137 FST
16	060029392	1	WASHER, Washer 17x8,3x2,5
17	825-1408	1	NUT, M8, Cl 8,
20	31285178	1	GUIDE, Belt guide Д022-02.00.000 НАПРАВЛЯЮЩАЯ РЕМНЯ
21	31300402	1	ANGLE BAR, Angle Д022-00.00.003 УГОЛОК
22	614-8025	10	BOLT, Hex, M8 x 25, 8.8,
23	06577044	20	WASHER, SPECIAL, Locking washer B8
24	825-1408	10	NUT, M8, Cl 8,
25	31285313	1	ANGLE BAR, Angle Д022-00.00.004 УГОЛОК
30	31296131	1	BOW, Bracket Д022-03.00.000 СКОБА
31	31296156	1	ANGLE BAR, Angle Д022-00.00.005 УГОЛОК
32	31296164	2	ANGLE BAR, Angle Д022-00.00.016 УГОЛОК
33	31296172	1	RETAINER, Coupling Д022-00.00.017 КРОНШТЕЙН
34	31296180	1	SUPPORT, Support Д022-00.00.008 ОПОРА
35	31296654	1	SUPPORT, Support Д022-00.00.009 ДЕРЖАТЕЛЬ
36	614-8025	11	BOLT, Hex, M8 x 25, 8.8,

D220(02) DRIVE- TANK UNLOADER CLUTCH

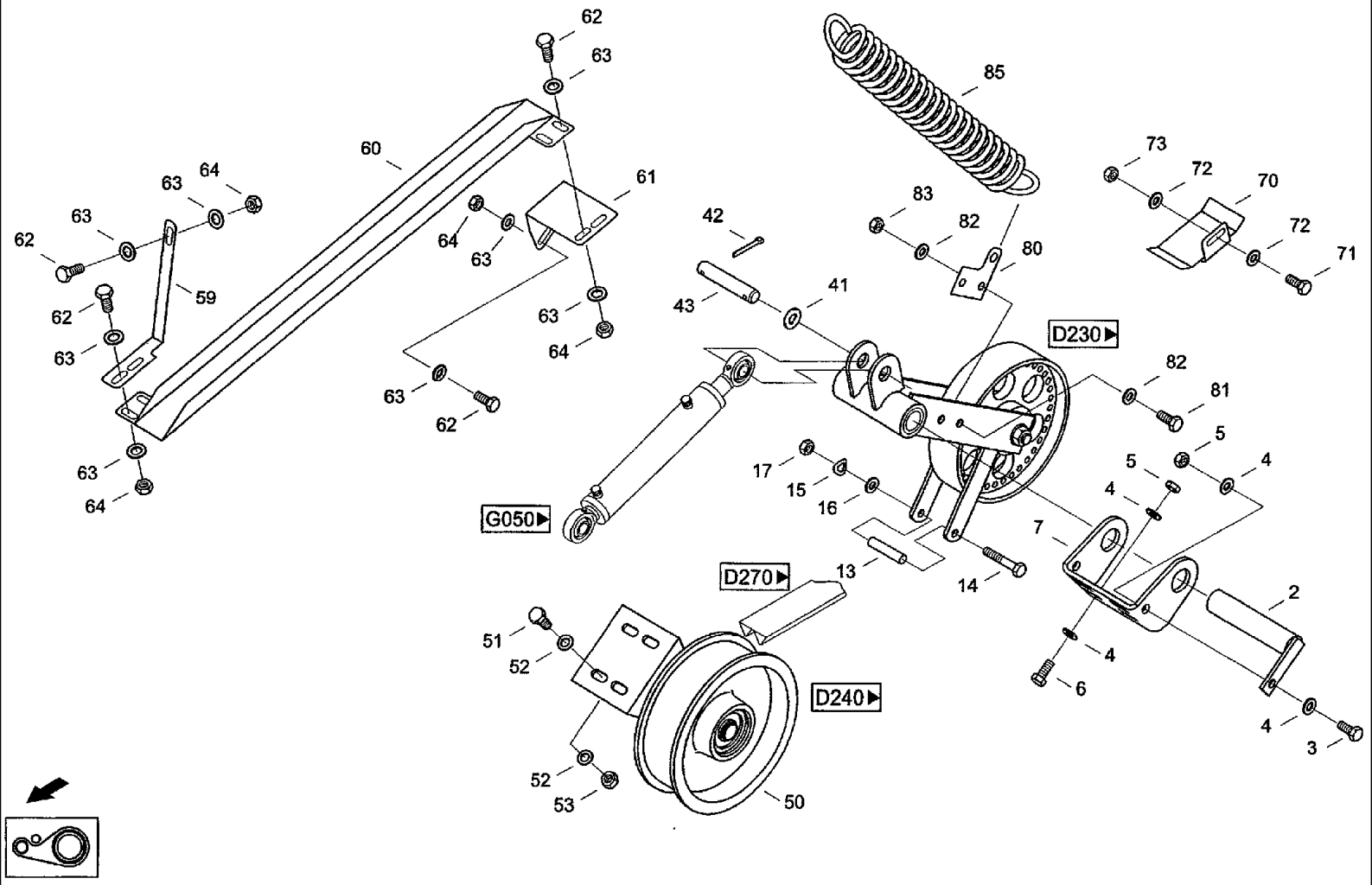

CF80 CASE IH CROSS FLOW COMBINE

D220(02) DRIVE- TANK UNLOADER CLUTCH

Ref	Part Number	Qty	Description
37	06577044	22	WASHER, SPECIAL, Locking washer B8
38	825-1408	11	NUT, M8, Cl 8,
39	614-12016	2	BOLT, Hex, M12 x 16, 8.8, Full Thd, Hex bolt M12x16 ISO4017 8.8
40	06577011	2	PLATE, LOCKING, Locking washer M12
41	895-11020	4	WASHER, M20 x 37 x 3, Washer 21 DIN125 ST
42	06402730	2	PIN, SPLIT (COTTER), Splint pin 5x32 DIN94 ST
43	007611096	1	PIN, LARGE, Bolt B16H11X70 DIN1443
50	31285225	1	ROLLER, Guide roller
51	614-10030	4	BOLT, Hex, M10 x 30, 8.8,
52	06577052	8	WASHER, SPECIAL, Locking washer B10
53	825-1410	4	NUT, M10, Cl 8,
59	31296123	1	SUPPORT, Angle Д022-00.00.011 УГОЛОК
60	31285200	1	GUIDE, Guide channel Д022-04.00.000 НАПРАВЛЯЮЩАЯ
61	31285321	1	ANGLE, Angle Д022-00.00.012 УГОЛОК
62	614-8025	6	BOLT, Hex, M8 x 25, 8.8,
63	06577044	12	WASHER, SPECIAL, Locking washer B8
64	825-1408	6	NUT, M8, Cl 8,
70	31300410	1	SUPPORT, Unit Д022-00.00.013 НАПРАВЛЯЮЩАЯ
71	614-8025	1	BOLT, Hex, M8 x 25, 8.8,
72	06577044	2	WASHER, SPECIAL, Locking washer B8
73	825-1408	1	NUT, M8, Cl 8,
80	31296670	1	SUPPORT, Plate Д022-00.00.014 ДЕРЖАТЕЛЬ
81	614-8025	2	BOLT, Hex, M8 x 25, 8.8,
82	06577044	4	WASHER, SPECIAL, Locking washer B8
83	825-1408	2	NUT, M8, Cl 8,

CF80 CASE IH CROSS FLOW COMBINE

D220(03) DRIVE- TANK UNLOADER CLUTCH

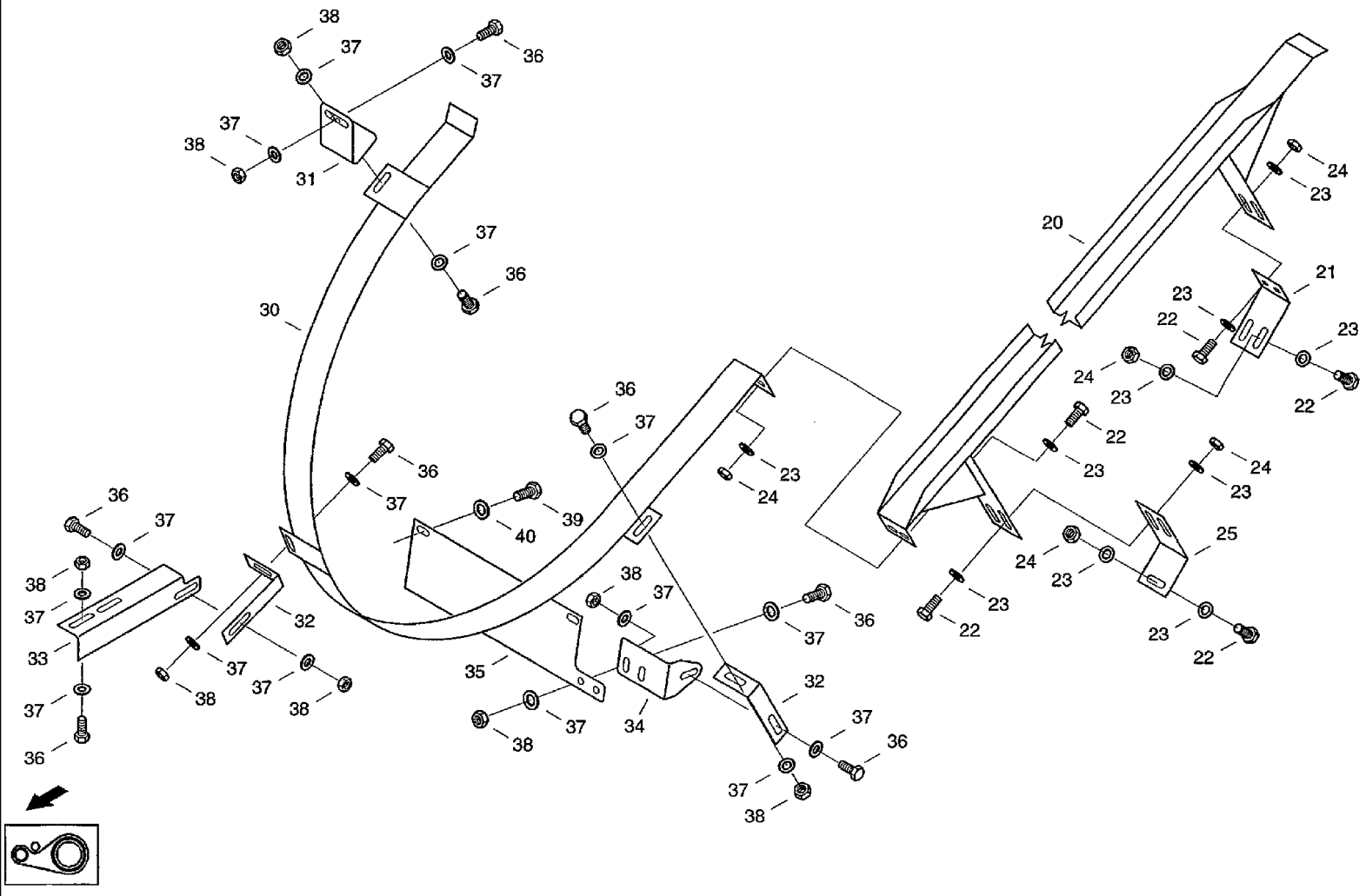

CF80 CASE IH CROSS FLOW COMBINE

D220(03) DRIVE- TANK UNLOADER CLUTCH

Ref	Part Number	Qty	Description
85	006700811	1	SPRING, TENSION, Tension spring B5,5x60x25AA

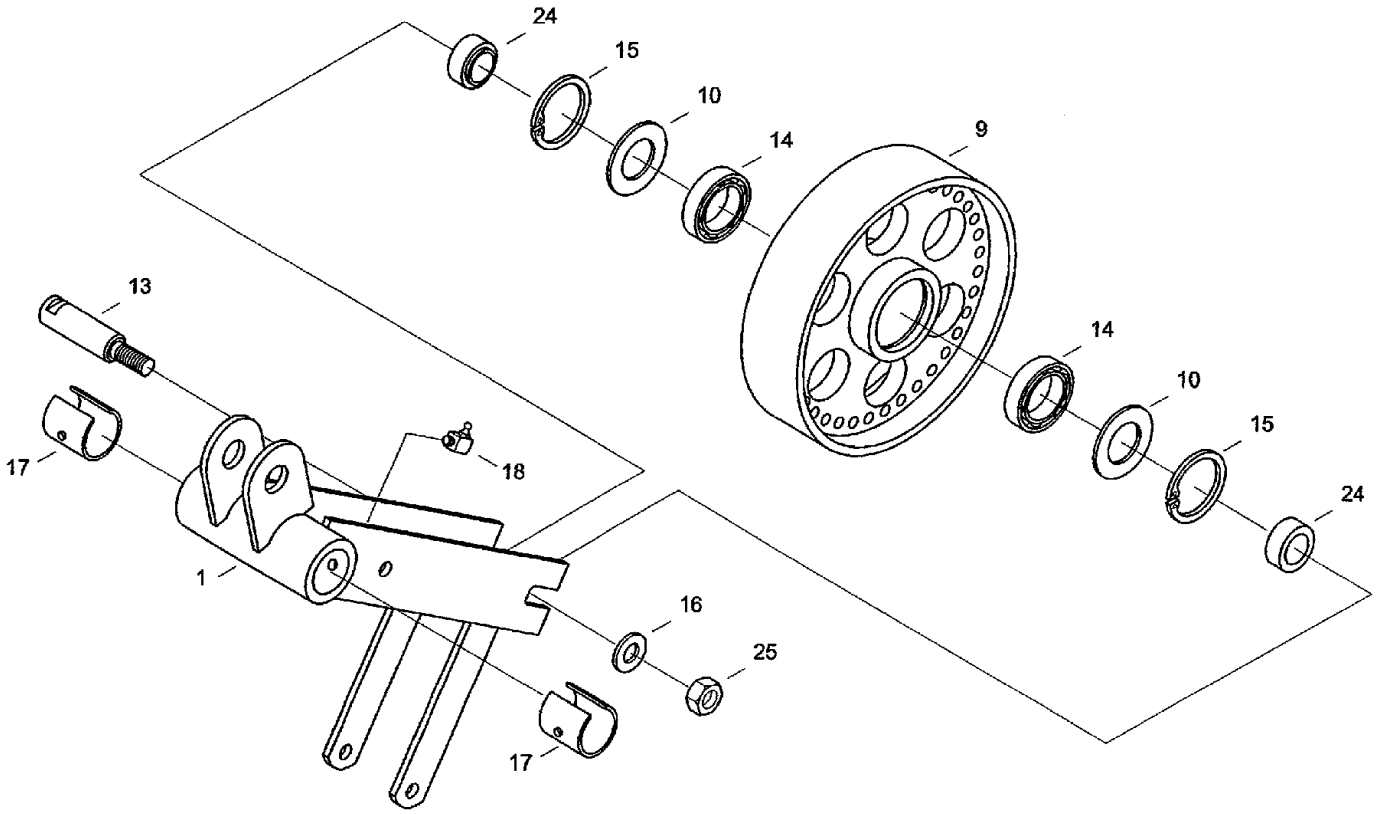

D220

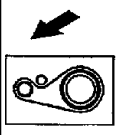

CF80 CASE IH CROSS FLOW COMBINE

D230 DRIVE- ROCKER

Ref	Part Number	Qty	Description
1	061071625	1	DIPPER, Swivel lever Д023-01.00.000 ПОВОРОТНЫЙ РЫЧАГ
9	060051727	1	ROLLER, SHIFTER, Roller RZ 060 177290
10	020222302	2	SEAL WASHER, Seal ring
13	020942171	1	PIN, LARGE, Bolt
14	003671728	2	BEARING, Grooved ball bearing 6304-RS DIN625 FAG/
15	800-2152	2	RING, SNAP, M52, Int, Snap ring 52x2 DIN472 FST
16	06577060	1	WASHER, Locking washer B12
17	020517718	2	RING, Sleeve
18	03640754	1	NIPPLE, LUBE, Grease nippel CM8x1 DIN71412
24	020469653	2	BUSHING, Sleeve
25	825-13412	1	NUT, M12 x 1.25, Cl 8, Hex nut M12x1,5ISO86738

D240 DRIVE- GUIDE ROLLER

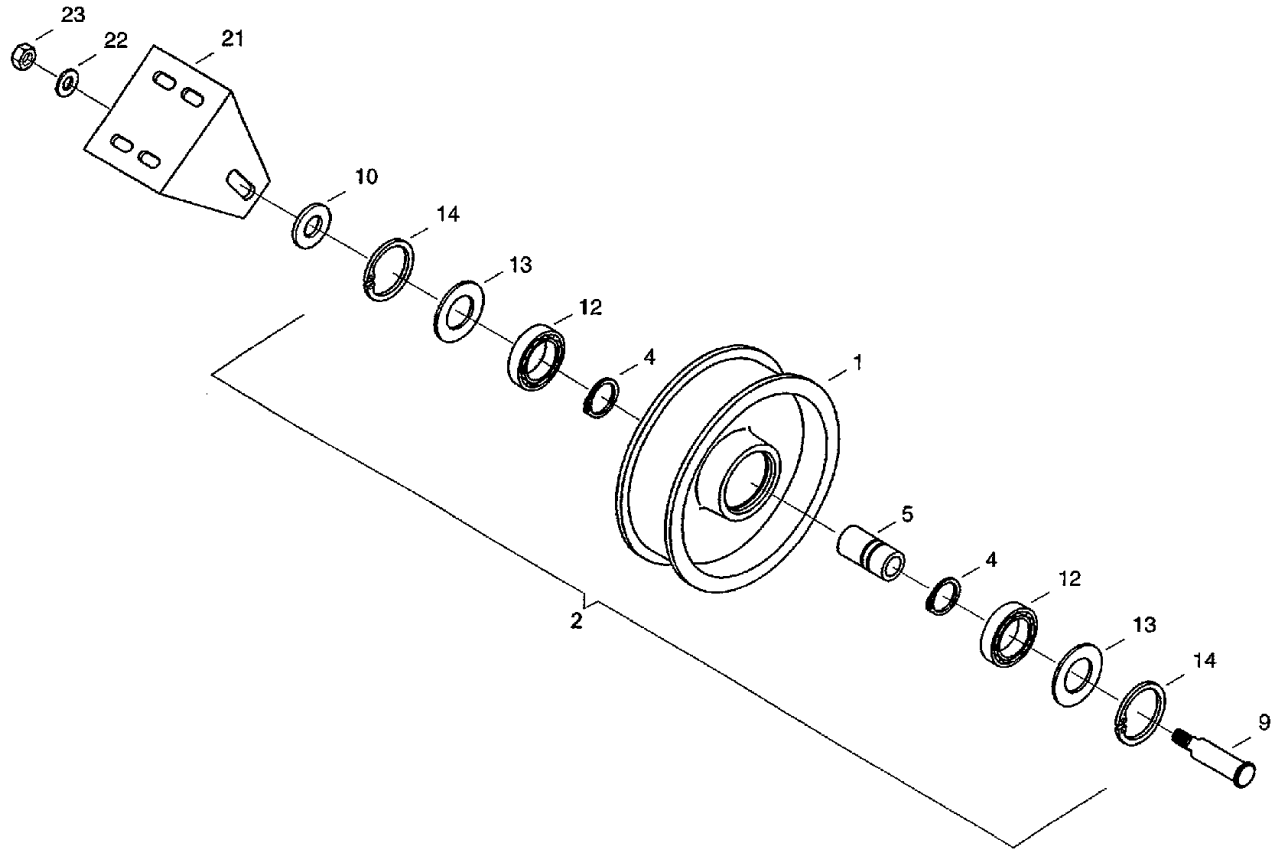

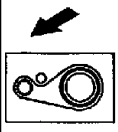

CF80 CASE IH CROSS FLOW COMBINE

D240 DRIVE- GUIDE ROLLER

Ref	Part Number	Qty	Description	
1	020206343	1	TIGHTENER SHEAVE, Idler RZ 00561 1797	Д025-00.00.001 РОЛИК
2	020215360	1	TIGHTENER SHEAVE, Idler 30x1,5DIN471 FST	
4	800-1130	2	RING, SNAP, M30, Ext, Snap ring	
5	020265997	1	BUSHING, Sleeve	Д025-00.00.002 ВТУЛКА
9	072024013	1	PIN, LARGE, Bolt	Д024-00.00.002 ПАЛЕЦ
10	021424905	1	WASHER, Washer MDW-N14510-22x45x 5-RST	Д024-00.00.003 ШАЙБА
12	03652050	2	BEARING, BALL, Grooved ball bearing 6206-RS DIN625	
13	020215465	2	SEAL WASHER, Seal ring 35,3x61x0,3	5550-4001:013/04 УПЛОТНИТЕЛЬНАЯ ШАЙБА
14	800-2162	2	RING, SNAP, M62, Int, Snap ring 62x2 DIN472 FST	
21	31285233	1	SUPPORT, Support	Д024-00.00.001 ДЕРЖАТЕЛЬ
22	06577060	1	WASHER, Locking washer B12	
23	825-1412	1	NUT, M12, Cl 8, Hex nut M12ISO40328	

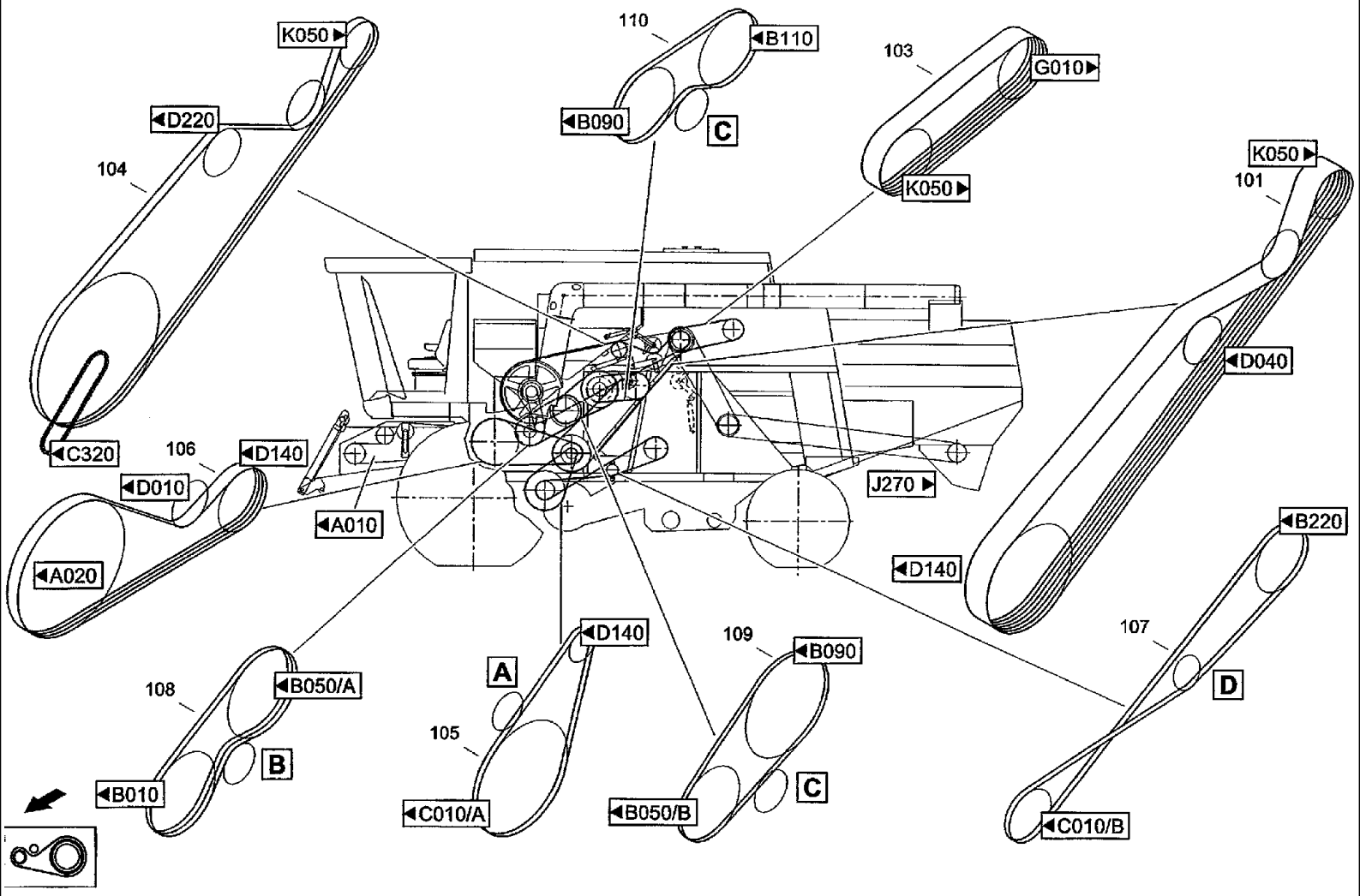
K050
D220
104
C320
106
D140
D010
A020
A010
110
B110
B090
C
103
G010
K050
101
K050
D040
J270
D140
B220
107
D
108
B050/A
B
B010
A
D140
105
C010/A
109
B090
B050/B
C
C010/B

CF80 CASE IH CROSS FLOW COMBINE

D270(01) DRIVE- DRIVE MECHANISM, LEFT

Ref	Part Number	Qty	Description
1	061019863	1	BRACKET, Panel 526-54515:000/04 консоль
2	060160885	1	TIGHTENER SHEAVE, Idler
3	614-10025	2	BOLT, Hex, M10 x 25, 8.8, Full Thd, Hex bolt M10X25ISO40178.8
4	06577052	4	WASHER, SPECIAL, Locking washer B10
5	825-1410	2	NUT, M10, Cl 8,
10	060121130	1	BAR, Tensioning bar д027-10.00.001 натяжная планка
11	020797274	1	TIGHTENER SHEAVE, Idler
12	614-10030	2	BOLT, Hex, M10 x 30, 8.8,
13	06577052	4	WASHER, SPECIAL, Locking washer B10
14	825-1410	2	NUT, M10, Cl 8,
20	072024118	2	PULLEY, Idler
21	020797266	2	BUSHING, Sleeve д027-30.00.003 втулка
22	06577060	2	WASHER, Locking washer B12
24	825-1412	2	NUT, M12, Cl 8, Hex nut M12ISO40328
51	31345816	1	TENSIONER, Tensioner
52	072064221	1	WASHER, Washer д027-20.00.001 шайба
53	006713238	1	SPRING, COMPRESSION, Pressure spring 08x55x11,5 д027-20.00.007 пружина
54	825-1412	3	NUT, M12, Cl 8, Hex nut M12 ISO4032 8
55	003798854	1	PIN, LARGE, Bolt B12H1 1x45x32 DIN1443 д027-20.00.005 палец
56	733-3220	1	PIN, SPLIT (COTTER), M3.2 x 20, Splint pin 3,2x20 DIN94 ST
57	31343558	1	PIPE, Tube д027-20.00.002 труба
58	31345004	1	SIDE-PLATE, Plate д027-20.00.006 пластина
59	614-10025	3	BOLT, Hex, M10 x 25, 8.8, Full Thd, Hex bolt M10x25ISO40178.8
60	06577052	6	WASHER, SPECIAL, Locking washer B10
61	825-1410	3	NUT, M10, Cl 8,

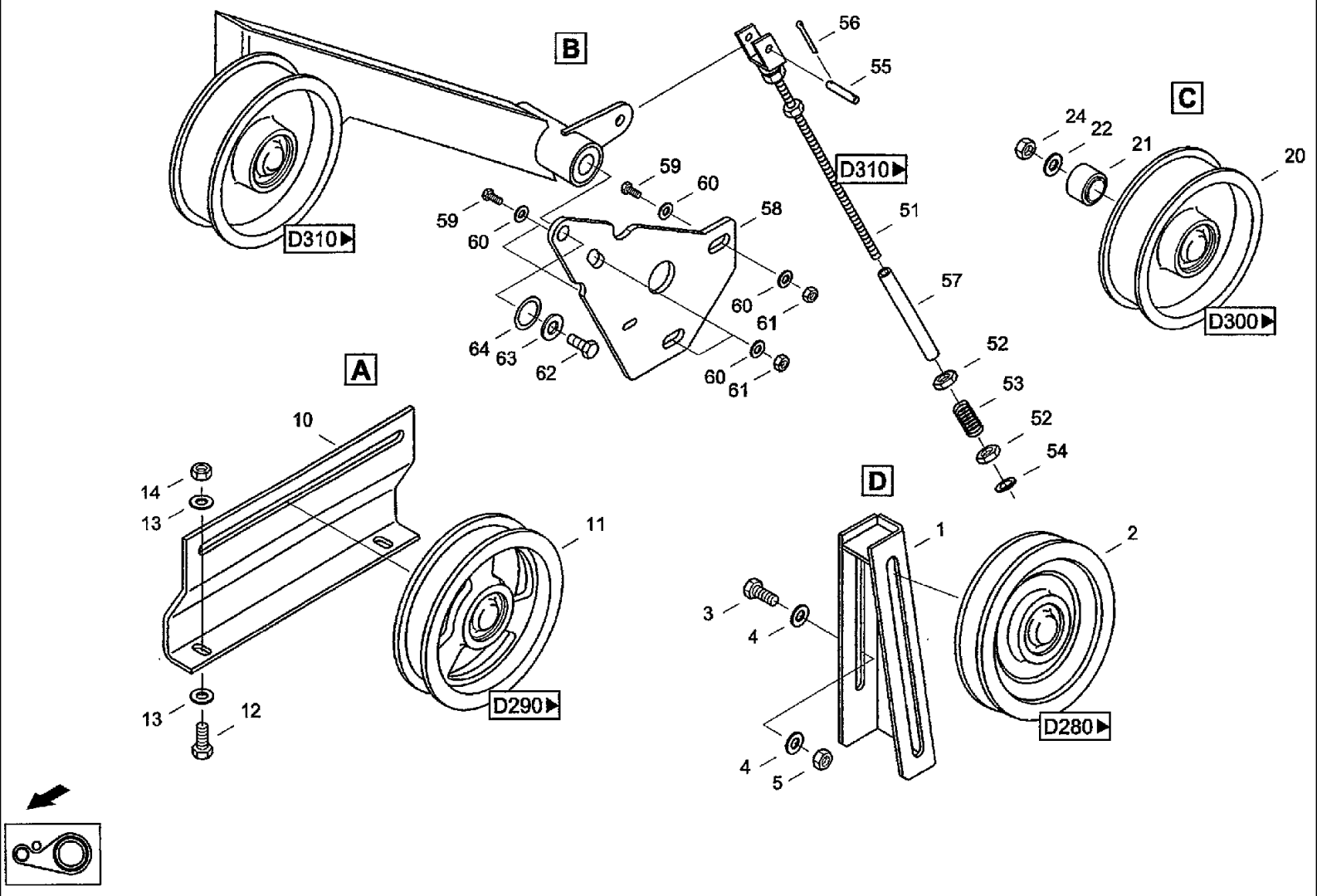
A
B
C
D
D310
D310
D290
D280
D300
1
2
3
4
4
5
10
11
12
13
13
14
20
21
22
24
51
52
52
53
54
55
56
57
58
59
59
60
60
60
60
61
61
62
63
64

CF80 CASE IH CROSS FLOW COMBINE

D270(02) DRIVE- DRIVE MECHANISM, LEFT

Ref	Part Number	Qty	Description
62	614-10020	1	BOLT, Hex, M10 x 20, 8.8, Full Thd,
63	06577003	1	WASHER, SPECIAL, Locking washer M10
64	021423496	4	WASHER, Shim 30x42x1. 5 DIN988
101	061068968	1	BELT, Composite v-belt 6HB 4985 K LA+/-10 KEVLAR
103	061068943	1	BELT, Composite v-belt 5HB 2150 LA+/-10(K) KEVLAR
104	31301147	1	V-BELT, Composite v-belt 2MB 5500 LA+/-10 KEVLAR
105	061069036	1	BELT, Narrow v-belt XPB2150LW+/-20
106	061068935	1	BELT, Composite v-belt 3HB3300LA+/-10
107	061069028	1	BELT, Narrow v-belt SPB 3730 LW +/-30
108	31343437	1	V-BELT, Composite v-belt 2HB 2062 LA+10/-5(K) KEVLAR
109	31310695	1	BELTS, SET OF 2, Narrov v-belt set 2xPB 2150 LW+20 BEST.-ZEI.
110	061068976	1	BELTS, SET OF 2, Narrov v-belt set 2SPB1900LW+/-20

D280 DRIVE- IDLER

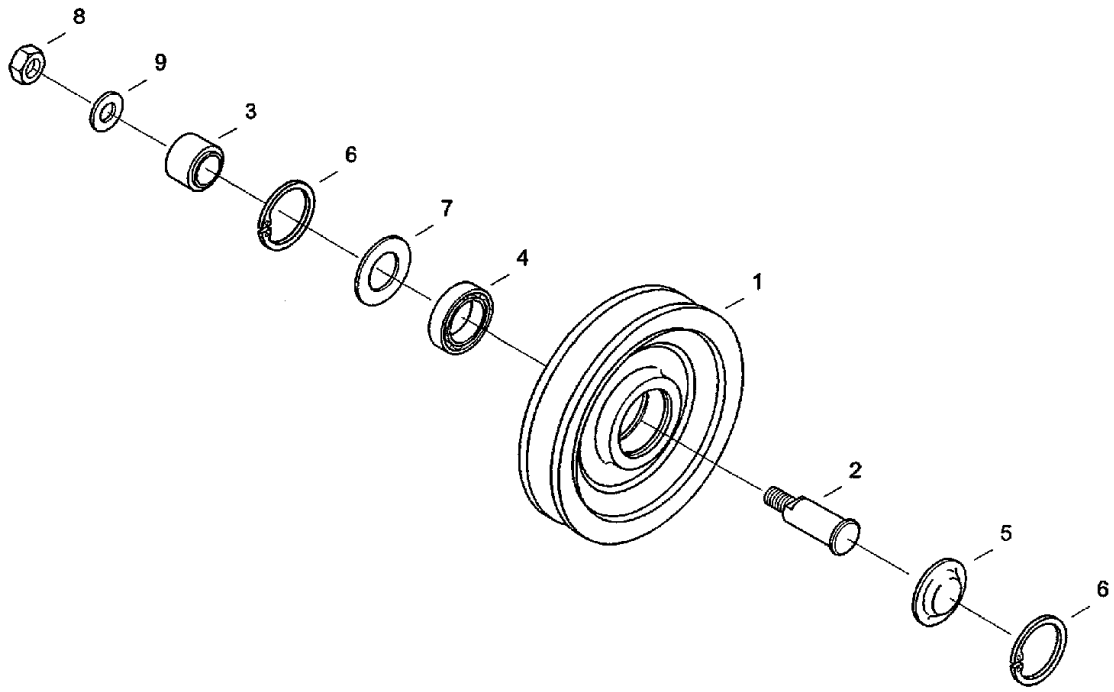

D270

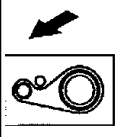

CF80 CASE IH CROSS FLOW COMBINE

D280 DRIVE- IDLER

Ref	Part Number	Qty	Description	
1	060160893	1	ROLLER, SHIFTER, Roller RZ 005043356	524-54513:001/04 ролик
2	021421084	1	PIN, LARGE, Bolt TGL33857-(65)	палец
3	020797266	1	BUSHING, Sleeve	5552-4009:003/04 втулка
4	03651878	1	BEARING, Grooved ball bearing 6204-RS DIN625 INA/SKF/SAG	
5	03500630	1	COVER, Cap 4733-17127	
6	800-2147	2	RING, SNAP, M47, Int, Snap ring 47x1,75DIN472FST	
7	020087255	1	SEAL WASHER, Seal ring 25,5x46,5x0,2	5247-0001:004/04 уплотнительная шайба
8	825-1412	1	NUT, M12, Cl 8, Hex nut M12 ISO4032 8	
9	06577060	1	WASHER, Locking washer B12	

D290 DRIVE- IDLER

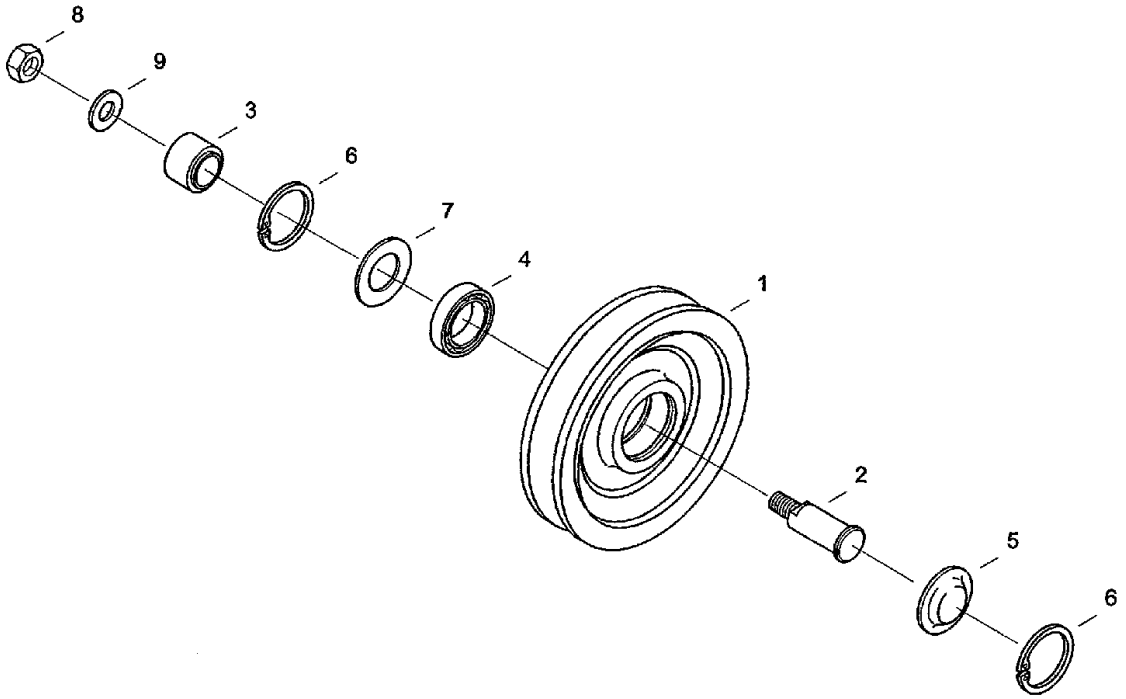

◀D270

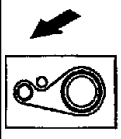

CF80 CASE IH CROSS FLOW COMBINE

D290 DRIVE- IDLER

Ref	Part Number	Qty	Description
1	020797282	1	ROLLER, SHIFTER, Roller RZ 005043364 5552-4010:001 ролик
2	021421084	1	PIN, LARGE, Bolt TGL33857-(65) палец
3	020797266	1	BUSHING, Sleeve 5552-4009:003/04 втулка
4	03651878	1	BEARING, Grooved ball bearing 6204-RS DIN625 INA/SKF/SAG
5	03500630	1	COVER, Cap 4733-17127
6	800-2147	2	RING, SNAP, M47, Int, Snap ring 47x1,75DIN472FST
7	020087255	1	SEAL WASHER, Seal ring 25,5x46,5x0,2 5247-0001:004/04 уплотнительная шайба
8	825-1412	1	NUT, M12, Cl 8, Hex nut M12 ISO4032 8
9	06577060	1	WASHER, Locking washer B12

D300 DRIVE- IDLER

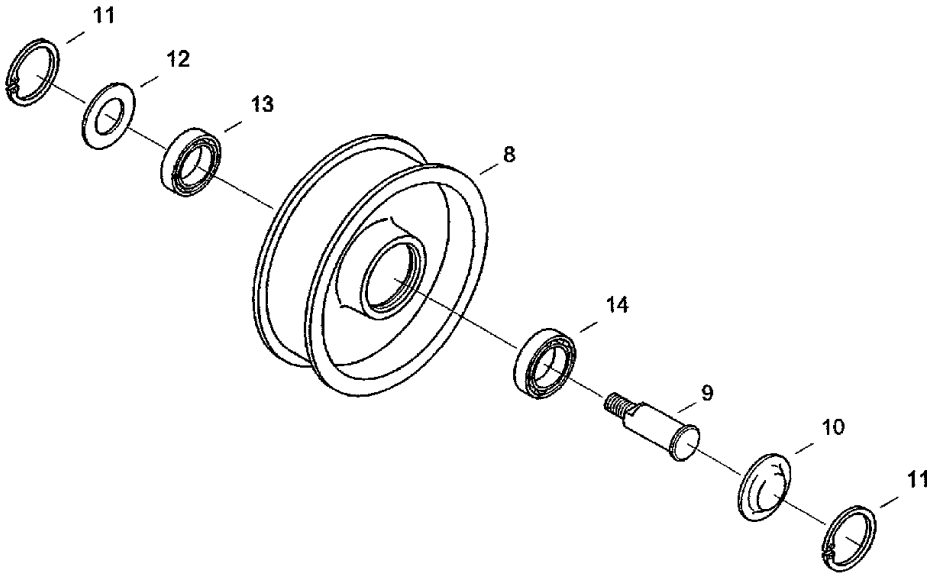

◀D270

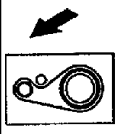

CF80 CASE IH CROSS FLOW COMBINE

D300 DRIVE- IDLER

Ref	Part Number	Qty	Description
8	072024101	1	ROLL, Roller д027-30.00.001
9	072024126	1	BOLT, Bolt д027-30.00.002 палец
10	03500630	1	COVER, Cap 47 33-17127
11	800-2147	2	RING, SNAP, M47, Int, Snap ring 47x1,75DIN472FST
12	020087255	1	SEAL WASHER, Seal ring 25,5x46,5x0,2 5247-0001:004/04 уплотнительная шайба
13	03651878	1	BEARING, Grooved ball bearing 6204-RS DIN625 INA/SKF/SAG
14	03652001	1	BEARING, Grooved ball bearing 6204 DIN625 FAG/

CF80 CASE IH CROSS FLOW COMBINE

D310 DRIVE- TENSIONER

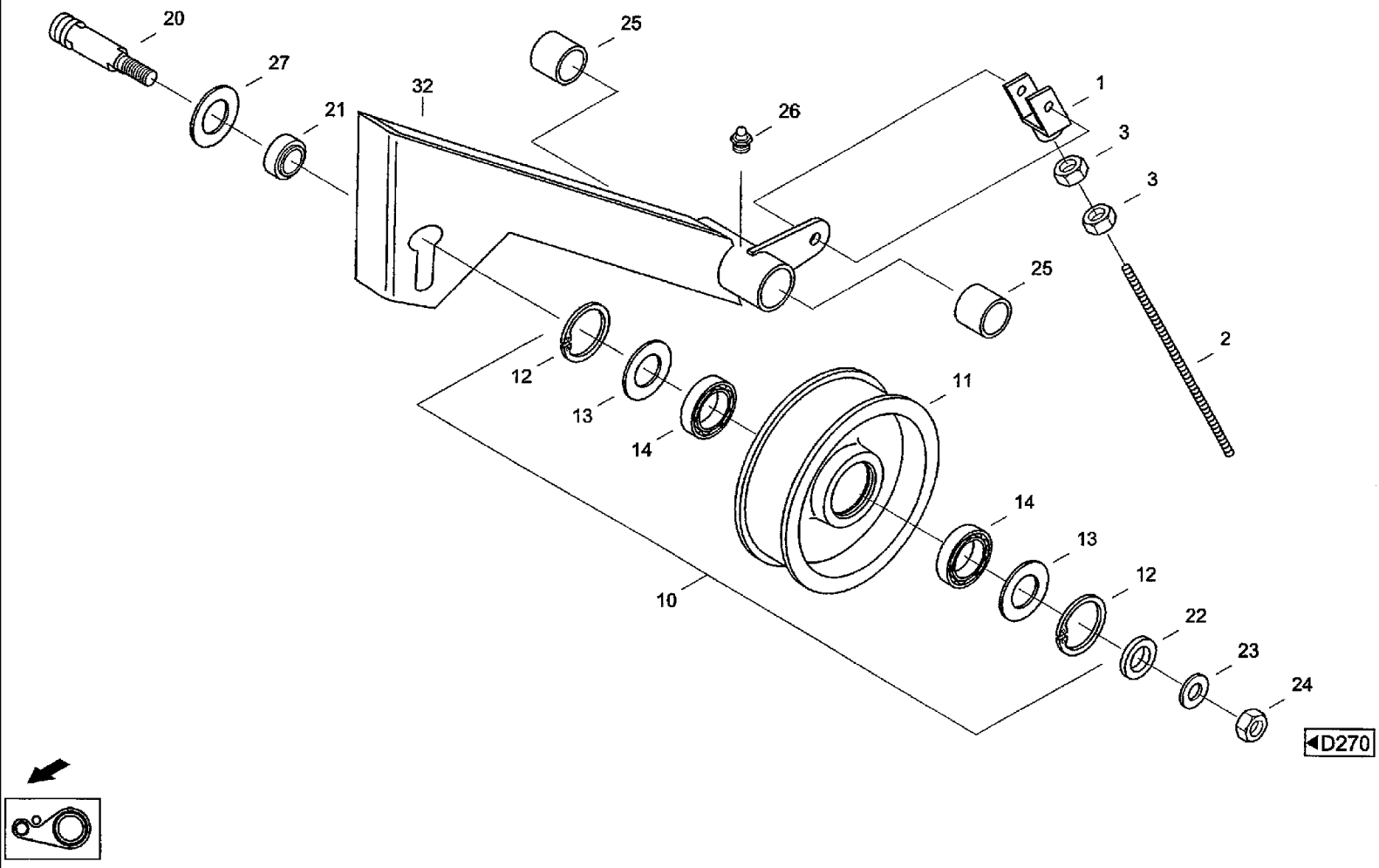

CF80 CASE IH CROSS FLOW COMBINE

D310 DRIVE- TENSIONER

Ref	Part Number	Qty	Description	
1	97058011	1	CRADLE, Yoke G12x24 DIN71752 9S20K	д027-20.00.004 вильчатая головка
2	072063784	1	THREADED ROD, Threaded pin	д027-20.00.003 шпиндель
3	825-1412	2	NUT, M12, Cl 8, Hex nut M12 IS04032 8	
10	31287991	1	TIGHTENER SHEAVE, Idler	
11	31288043	1	PULLEY, Roller	д027-30.00.001-01 ролик
12	800-2147	2	RING, SNAP, M47, Int, Snap ring 47x1,75DIN472FST	5247-0001:004/04 уплотнительная шайба
13	020087255	2	SEAL WASHER, Seal ring 25,5x46,5x0,2	
14	03651878	2	BEARING, Grooved ball bearing 6204-RS DIN625 INA/SKF/SAG	
20	31288027	1	BOLT, Bolt	д027-20.10.001 палец
21	31288002	1	BUSHING, Sleeve	65304/20195 втулка
22	31288010	1	WASHER, Sleeve	д027-30.00.003-01 гильза
23	06577060	1	WASHER, Locking washer B12	
24	825-1412	1	NUT, M12, Cl 8, Hex nut M12 ISO4032 8	
25	020517718	2	RING, Sleeve	
26	03617056	1	NIPPLE, LUBE, Grease nippel AM8x1 DIN71412	
27	06500628	1	WASHER, Washer 23-ST-A3CDIN125	
32	31343398	1	DIPPER, Swivel lever	д027-20.20.000 поворотный рычаг

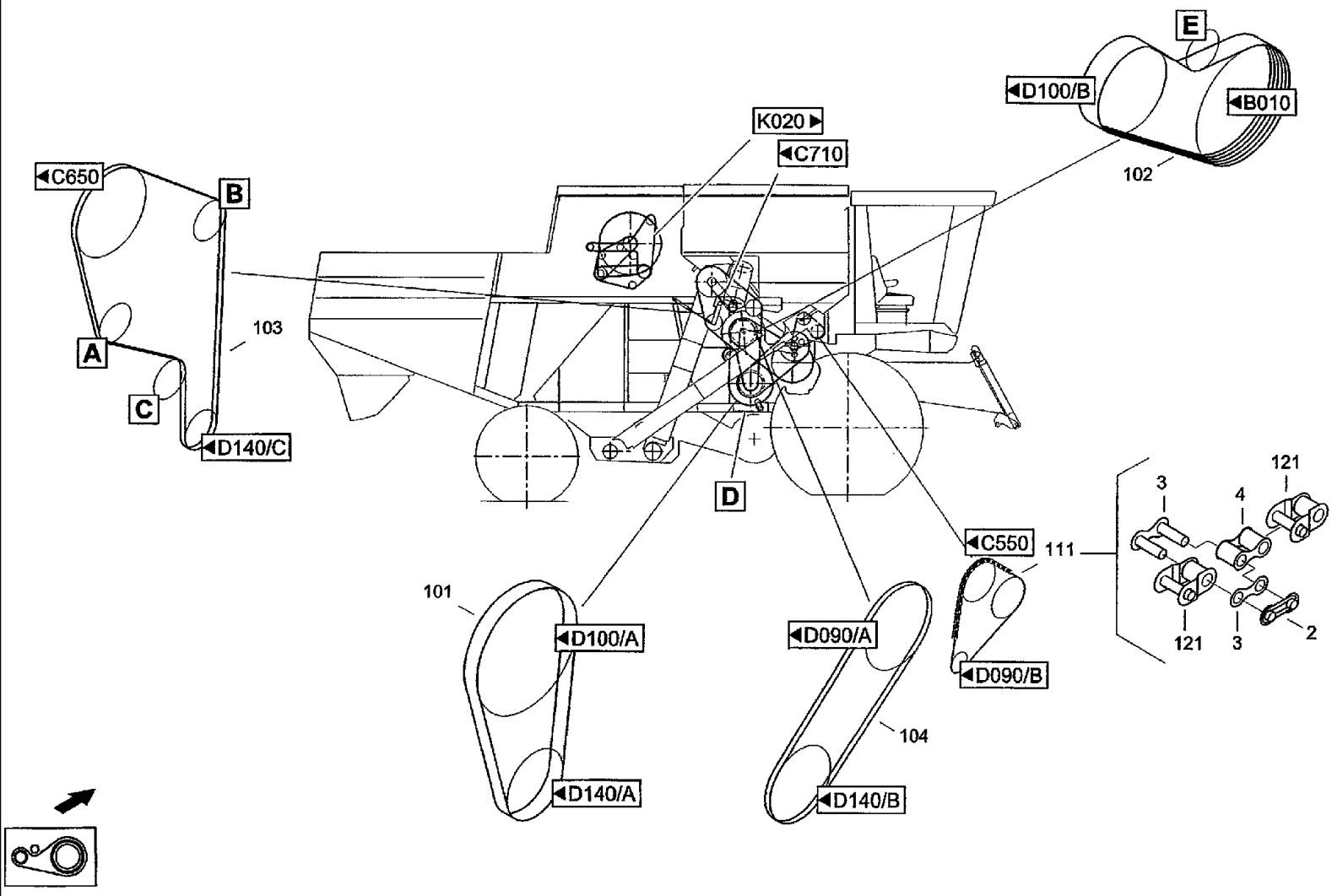
E
D100/B
B010
K020
C710
C650
B
102
103
A
C
D140/C
D
C550
111
121
3
4
121
3
2
101
D100/A
D090/A
D090/B
104
D140/A
D140/B

CF80 CASE IH CROSS FLOW COMBINE

D340(01) DRIVE- DRIVE MECHANISM, RIGHT

Ref	Part Number	Qty	Description
1	061074170	1	ANGLE BAR, Attaching
2	06804023	1	LINK, Link E-12B-1 DIN8187
3	060506732	1	LINK, Link A-12B-1 DIN8187
4	31325861	1	LINK, Link B-12B-1 DIN8187
5	061005392	1	SPRING, TENSION, Tension spring 65,5x34x1 6AA1 д034-10.00.004 пружина
6	020813653	1	RAIL, Eye bolt AM8X230 д034-10.00.001 винт
7	072055124	1	SHIN, Butt strap д034-10.00.002 тяга
8	825-1408	3	NUT, M8, Cl 8,
9	31289358	1	ANGLE BAR, Angle д034-10.00.003 уголок
10	061074121	1	TIGHTENER SHEAVE, Idler
11	614-10025	3	BOLT, Hex, M10 x 25, 8.8, Full Thd, Hex bolt M10x25ISO40178.8
12	06577003	6	WASHER, SPECIAL, Locking washer M10
13	825-1410	3	NUT, M10, Cl 8,
16	072024013	1	PIN, LARGE, Bolt
17	06577060	1	WASHER, Locking washer B12
19	825-1412	1	NUT, M12, Cl 8, Hex nut M12 ISO4032 8
20	021424905	1	WASHER, Washer MDW-N14510-22x45x 5-RST
21	614-10030	2	BOLT, Hex, M10 x 30, 8.8,
22	06577052	4	WASHER, SPECIAL, Locking washer B10
23	825-1410	2	NUT, M10, Cl 8,
70	31291336	1	SPACER, Stay
71	614-10025	1	BOLT, Hex, M10 x 25, 8.8, Full Thd, Hex bolt M10X25ISO40178.8
72	06577052	2	WASHER, SPECIAL, Locking washer B10
73	825-1410	1	NUT, M10, Cl 8,
80	31299632	1	DIPPER, Rocker DW

D340(02) DRIVE- DRIVE MECHANISM, RIGHT

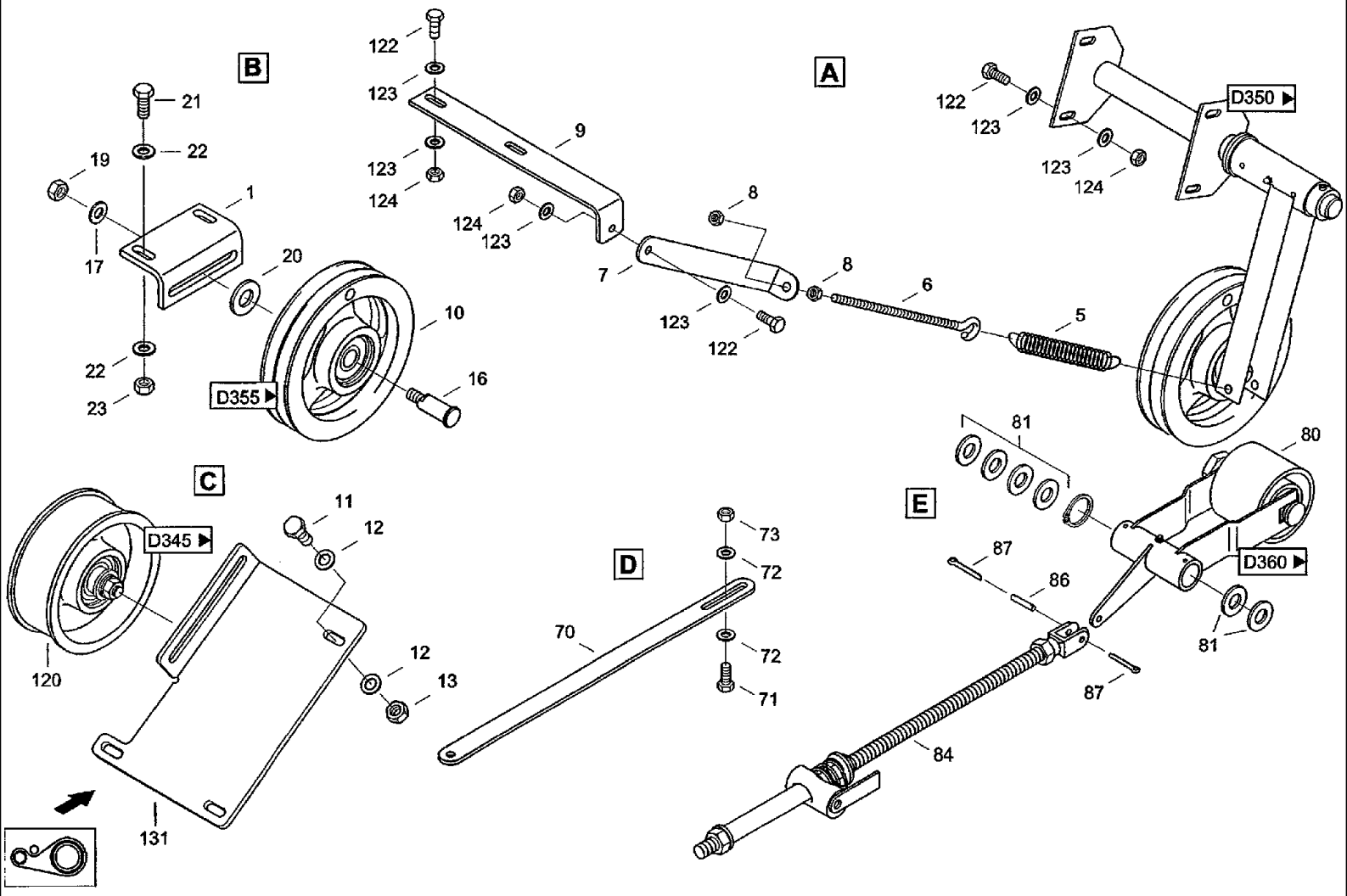

CF80 CASE IH CROSS FLOW COMBINE

D340(02) DRIVE- DRIVE MECHANISM, RIGHT

Ref	Part Number	Qty	Description
81	021422792	6	DISC, Washer MDW-N14510-42x60x 3-RST д034-40.00.004 шайба
82	800-1140	1	RING, SNAP, M40, Ext, Snap ring 40x1,75DIN471 FST
84	31345736	1	TENSIONER, Belt stretcher
86	003798854	1	PIN, LARGE, Bolt B12H1 1x45x32 DIN1443 д027-20.00.005 палец
87	733-3220	2	PIN, SPLIT (COTTER), M3.2 x 20, Splint pin 3,2x20 DIN94 ST
101	072049753	1	V-BELT, Wide section v-belt 71x30x2595 LA +/-10 KEVLAR
102	061068927	1	BELT, Composite v-belt 5HB2830LA+/-10
103	31323185	1	BELTS, SET OF 2, V-belt set 2x17x4100LI+/-15
104	01111725	1	BELT, Narrow v-belt SPB2500 LW +/-20
111	06837513	1	CHAIN (AGRICULTURE), Roller chains 12B-01-73 L E E DIN 8187 BEST
120	072055028	1	TIGHTENER SHEAVE, Idler
121	06805491	1	LINK, Link L-12B-1 DIN8187
122	614-8022	7	BOLT, Hex, M8 x 22, 8.8, Full Thd, Hex bolt M8x22ISO40178.8
123	06577028	14	WASHER, SPECIAL, Locking washer M8
124	825-1408	7	NUT, M8, Cl 8,
131	31289173	1	SUPPORT, Attaching д034-30.00.001 крепление

CF80 CASE IH CROSS FLOW COMBINE

D345 DRIVE- IDLER

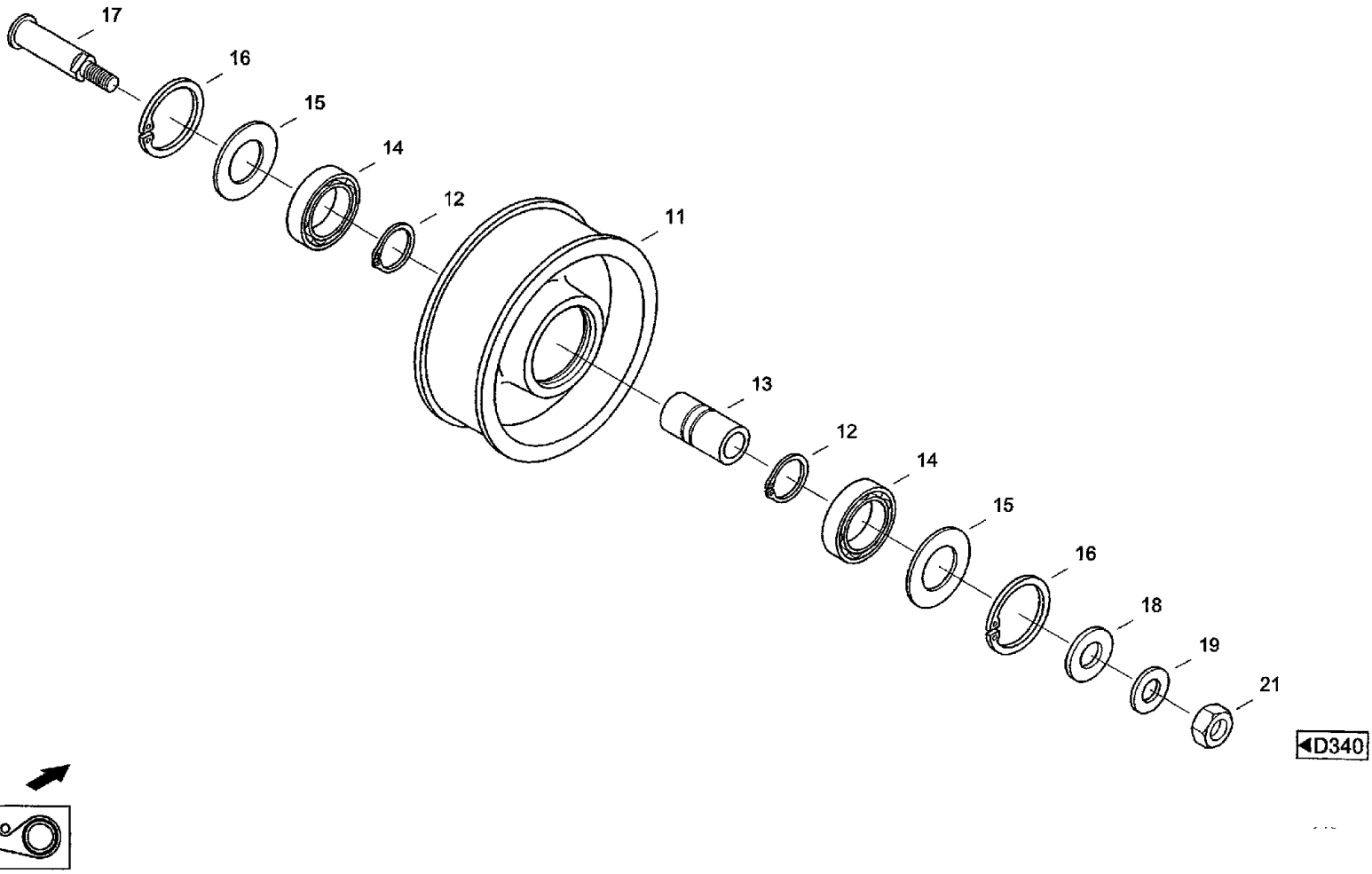

CF80 CASE IH CROSS FLOW COMBINE

D345 DRIVE- IDLER

Ref	Part Number	Qty	Description
11	072055036	1	PULLEY, Roller д034-30.01.001 ролик
12	800-1130	2	RING, SNAP, M30, Ext, Snap ring 30x1,5DIN471 FST
13	020265997	1	BUSHING, Sleeve д034-10.01.002 втулка
14	03652050	2	BEARING, BALL, Grooved ball bearing 6206-RS DIN625
15	020215465	2	SEAL WASHER, Seal ring 35,3x61x0,3 5550-4001:013/04 уплотнительная шайба
16	800-2162	2	RING, SNAP, M62, Int, Snap ring 62x2 DIN472 FST
17	072024013	1	PIN, LARGE, Bolt д034-10.01.003 палец
18	021424905	1	WASHER, Washer MDW-N14510-22x45x 5-RST н130.02.406 шайба
19	06577060	1	WASHER, Locking washer B12
21	825-1412	1	NUT, M12, CI 8, Hex nut M12 ISO4032 8

D350 DRIVE- TENSIONER

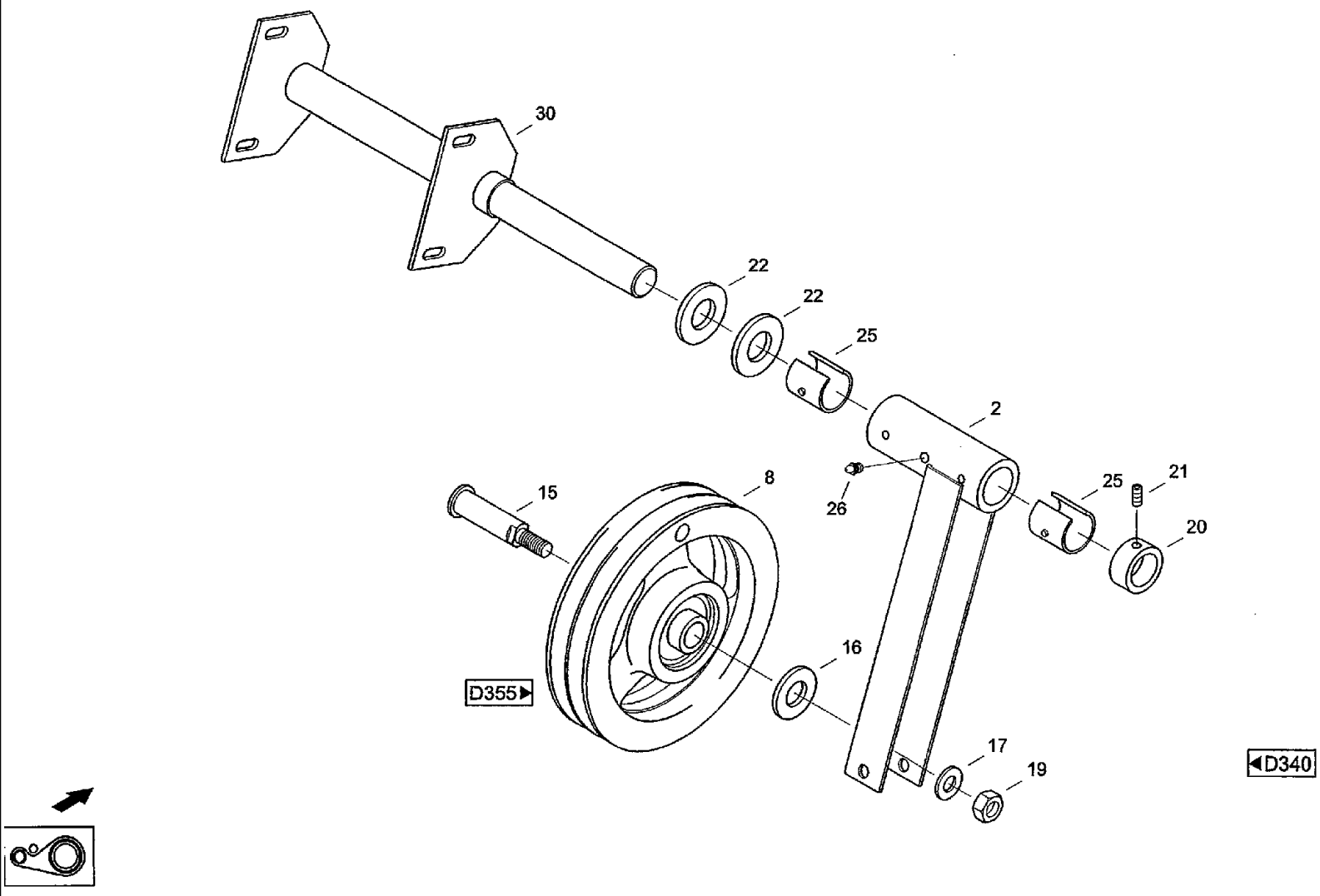

CF80 CASE IH CROSS FLOW COMBINE

D350 DRIVE- TENSIONER

Ref	Part Number	Qty	Description
2	061074146	1	LEVER, Swivel lever 250 д034-10.02.000 поворотный рычаг
8	061074121	1	TIGHTENER SHEAVE, Idler
15	072024013	1	PIN, LARGE, Bolt д034-10.01.003 палец
16	021424905	1	WASHER, Washer MDW-N14510-22x45x 5-RST н130.02.406 шайба
17	06577060	1	WASHER, Locking washer B12
19	825-1412	1	NUT, M12, Cl 8, Hex nut M12 ISO4032 8
20	060525341	1	RING, LOCKING, Adjusting ring A28-A3C DIN705 OHNE GEWINDE кольцо установочное
21	003784502	1	PIN, Threaded pin M8x10ISO402945H
22	06500773	2	WASHER, Washer A31 DIN125 140HV
25	020517718	2	RING, Sleeve 804/12700 втулка
26	03617056	1	NIPPLE, LUBE, Grease nippel AM8x1 DIN71412
30	31332571	1	HOLDER, Bearing KEI д034-10.03.000 опора

CF80 CASE IH CROSS FLOW COMBINE

D355 DRIVE- IDLER

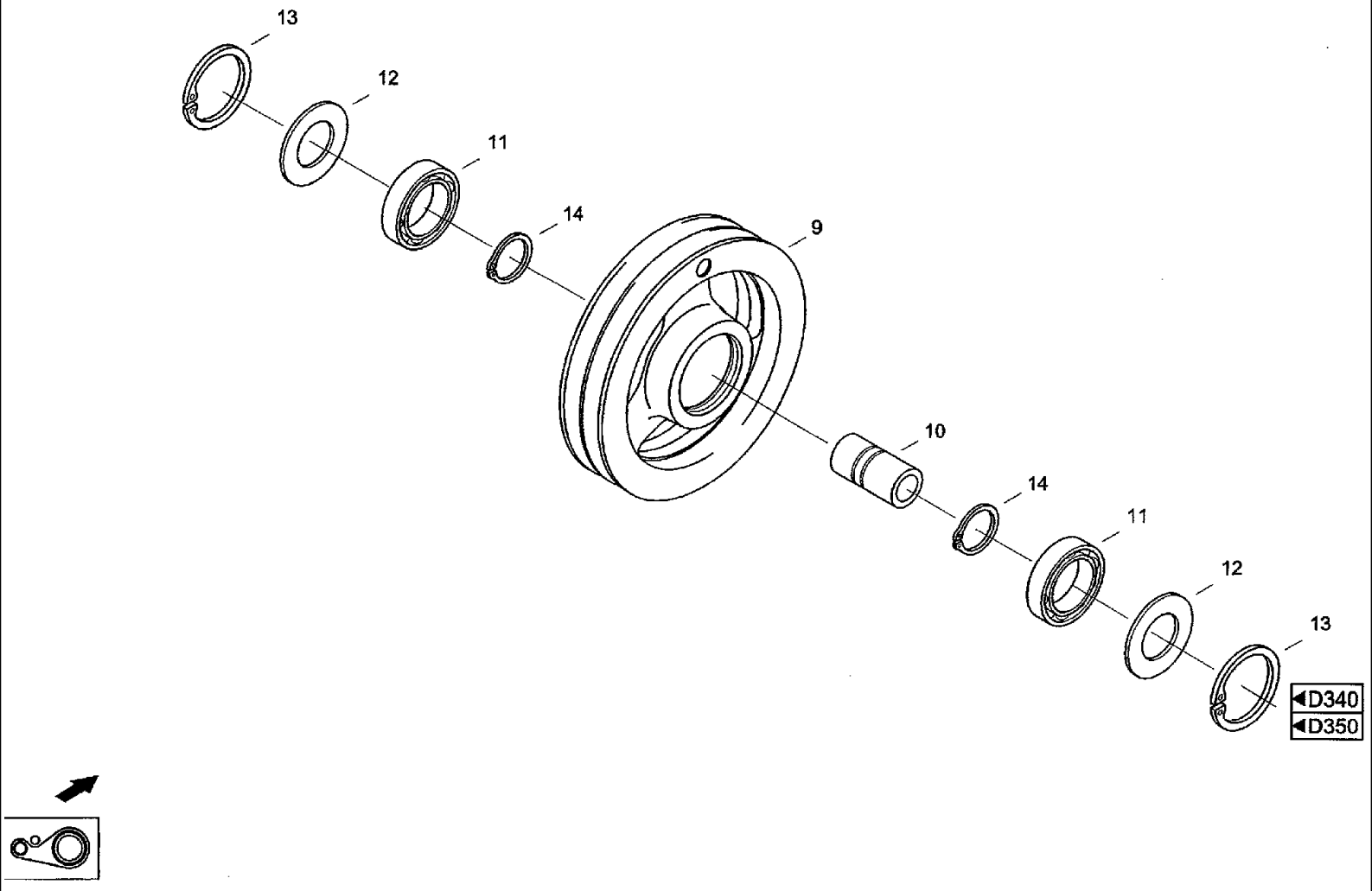

CF80 CASE IH CROSS FLOW COMBINE

D355 DRIVE- IDLER

Ref	Part Number	Qty	Description
9	061074275	2	TIGHTENER SHEAVE, Inner tension pulley д034-10.01.001 ролик
10	020265997	2	BUSHING, Sleeve д034-10.01.002 втулка
11	03652050	4	BEARING, BALL, Grooved ball bearing 6206-RS DIN625
12	020215465	4	SEAL WASHER, Seal ring 35,3x61x0,3 5550-4001:013/04 уплотнительная шайба
13	800-2162	4	RING, SNAP, M62, Int, Snap ring 62x2 DIN472 FST
14	800-1130	4	RING, SNAP, M30, Ext, Snap ring 30x1,5DIN471 FST

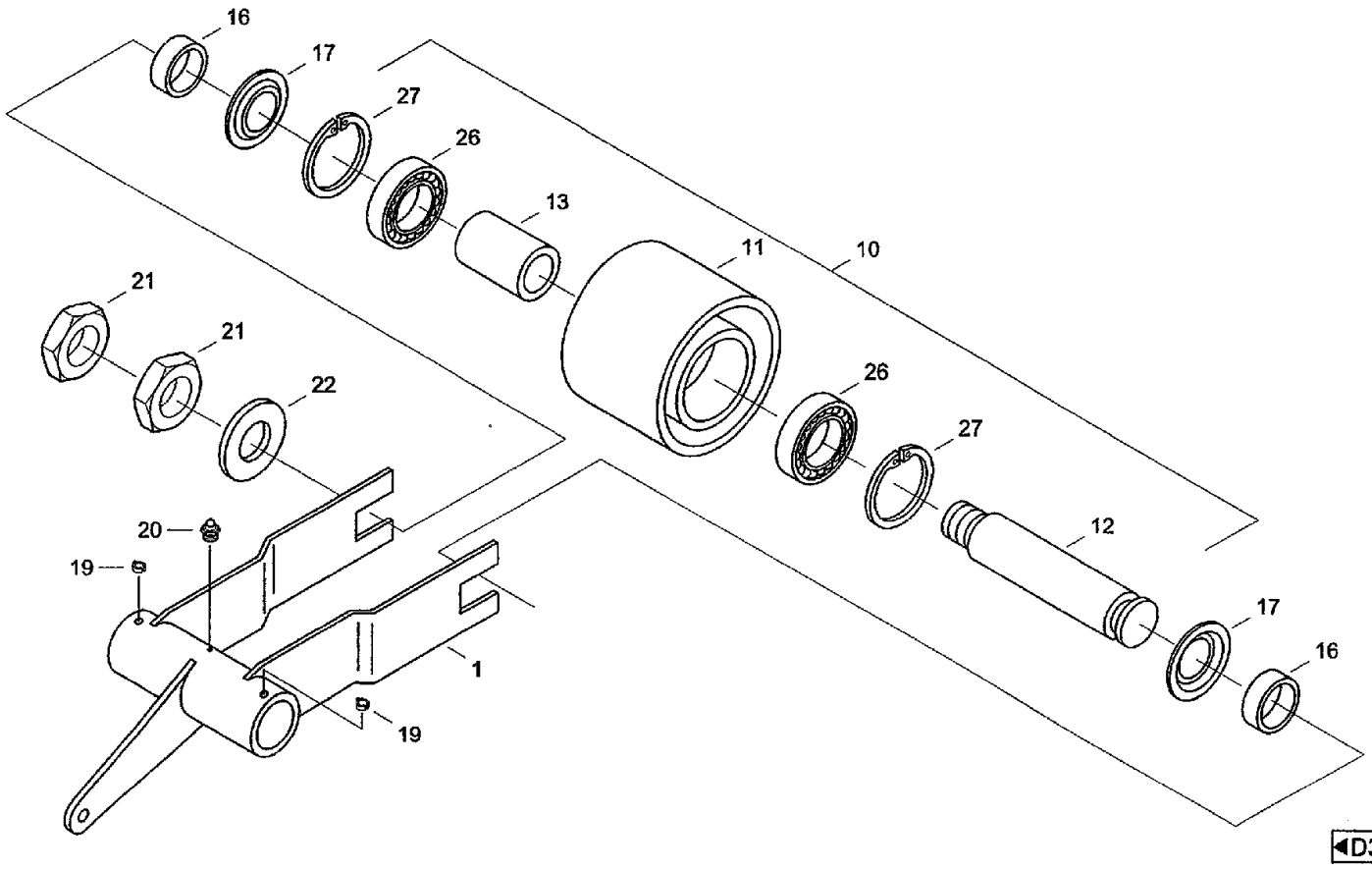
16
17
27
26
13
11
10
21
21
22
26
27
12
17
16
20
19
1
19
D340

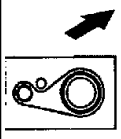

CF80 CASE IH CROSS FLOW COMBINE

D360 DRIVE- ROCKER

Ref	Part Number	Qty	Description	
1	31345808	1	LEVER, ROCKER, Swivel lever	д034-40.20.000 поворотный рычаг
10	31299673	1	PULLEY, Idler	
11	061074218	1	TIGHTENER SHEAVE, Roller	д034-40.10.001 ролик
12	072010797	1	PIN, LARGE, Bolt	д034-40.10.005 палец
13	072010803	1	SPACER, Spacer bushing	д034-40.10.003 втулка
16	072010748	2	BUSHING, Sleeve	д034-40.10.003-01 втулка
17	060105210	2	SEAL WASHER, Seal ring	д034-40.10.002 уплотнительная шайба
19	020464544	2	BUSHING, Bushing GLEITBUCHSE	4404/10123 втулка
20	03617056	1	NIPPLE, LUBE, Grease nippel AM8X1 DIN71412	
21	06222405	2	NUT, Hex nut M24x2 ISO8675 05	
22	895-11024	1	WASHER, M24 x 44 x 4, Washer 25 DIN125 ST	спу-8 шайба
26	03671816	2	BEARING ASSY, Grooved ball bearing 6207-RS DIN625 LE	
27	800-2172	2	CIRCLIP, Snap ring 72x2,5 DIN472 FST	

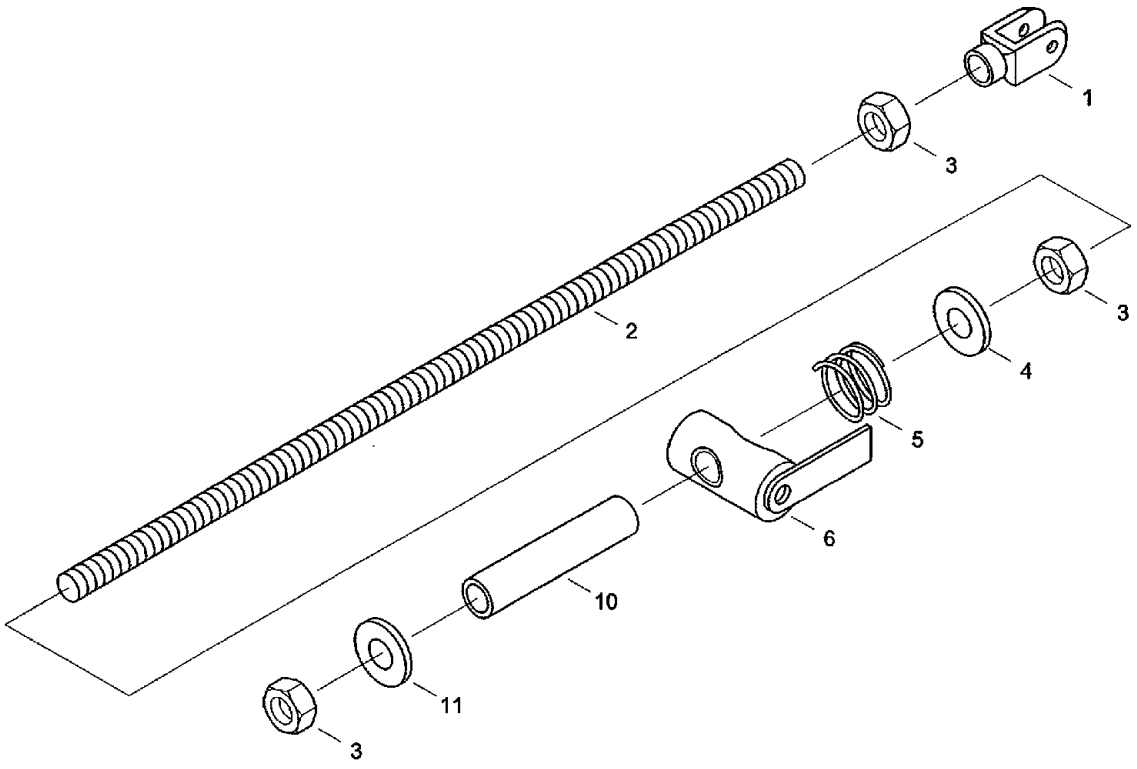

D340

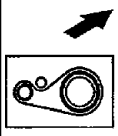

CF80 CASE IH CROSS FLOW COMBINE

D370 DRIVE- BELT STRETCHER

Ref	Part Number	Qty	Description	
1	06173196	1	CLEVIS, Yoke G14x28DIN71752A2K	д034-40.00.003 вильчатая головка
2	31345744	1	THREADED ROD, Threaded pin	д034-40.00.002 шпиндель
3	825-1414	3	NUT, M14, Cl 8, Hex nut M14 ISO4032 8	
4	31345777	1	DISC, Washer	646342 шайба
5	006713086	1	SPRING, COMPRESSION, Pressure spring C7x34x5,5	д034-40.00.005 пружина
6	31345752	1	PIN, LARGE, Bolt	д034-40.30.000 палец
10	31345785	1	SLEEVE, Sleeve	д034-40.00.001 гильза
11	895-11014	1	WASHER, M14 x 28 x 2.5, Washer 15DIN125ST	646342 шайба

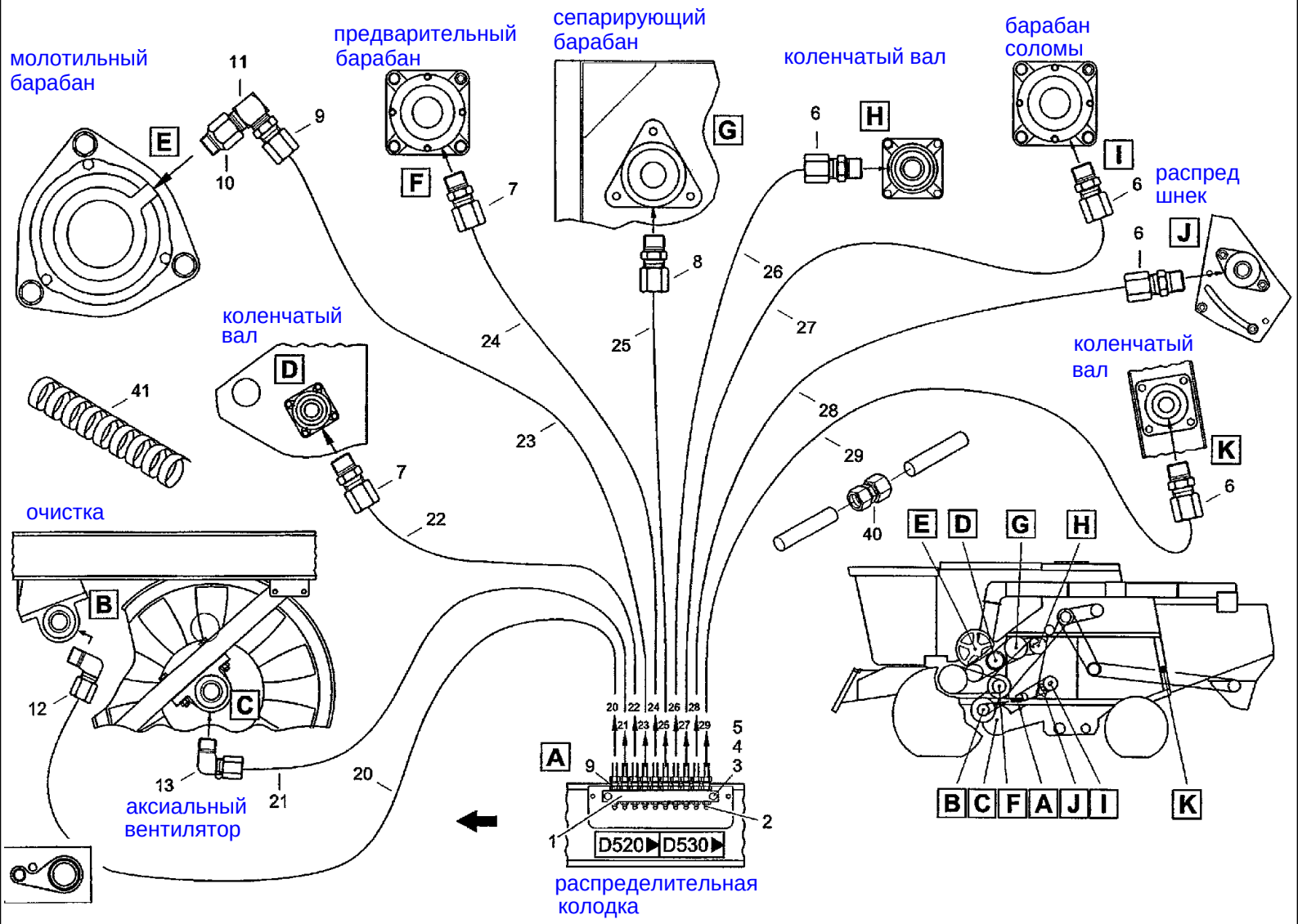
молотильный барабан
предварительный барабан
сепарирующий барабан
коленчатый вал
барабан соломы
распред шнек
коленчатый вал
коленчатый вал
очистка
аксиальный вентилятор
распределительная колодка
D520
D530
E
F
G
H
I
J
K
A
B
C
D
11
10
9
7
8
6
24
25
26
27
28
29
23
22
20
21
13
12
41
40
5
4
3
2
1

CF80 CASE IH CROSS FLOW COMBINE

D500 CENTRAL LUBRICATION SYSTEM- NIPPLE BAR, LEFT

Ref	Part Number	Qty	Description
1	31327211	1	RAMP, Nipple bar 10-FACH
2	03617097	10	NIPPLE, LUBE, Grease nippel BM10x1 DIN71412
3	864-6030	2	SCREW, Hex Soc Hd, M6 x 30, 8.8, Cheese-head screw M6x30 DIN912 8.8
4	06455742	2	WASHER, LOCK, Spring washer A6 DIN128 FST
5	825-1406	2	NUT, M6, Cl 8,
6	31327156	4	FITTING, Threaded joint GERADE M6K
7	03128065	2	FITTING, Threaded joint GERADEM8x1K
8	31327164	1	FITTING, Threaded joint GERADE R1/8ZOLL
9	03128098	11	FITTING, Threaded joint GERADE M1 0x1 K
10	31327172	1	FITTING, Connector KEGELIGM10x1K
11	03128156	1	FITTING, Right-angle screwing M8x1K90GRAD
12	03128040	1	ELBOW, Threaded joint WINKLIGM8x1K
13	31327180	1	FITTING, Threaded joint WINKLIG R1/8ZOLL
20	01451542	1	PIPE, Hose 1,2M6x1,5
21	01451542	1	PIPE, Hose 0,9M6x1,5
22	01451542	1	PIPE, Hose 1,6M6x1,5
23	01451542	1	PIPE, Hose 1.31M 6x1,5
24	01451542	1	PIPE, Hose 0,68M6x1,5
25	01451542	1	PIPE, Hose 1.32M 6x1,5
26	01451542	1	PIPE, Hose 1.72M 6x1,5
27	01451542	1	PIPE, Hose 1.15M 6x1,5
28	01451542	1	PIPE, Hose 0,8M6x1,5
29	01451542	1	PIPE, Hose 3,75M6x1,5
40	03129121	1	FITTING, Screwing GERADE
41	01451550	1	LOOM, Spiral hose 1M8

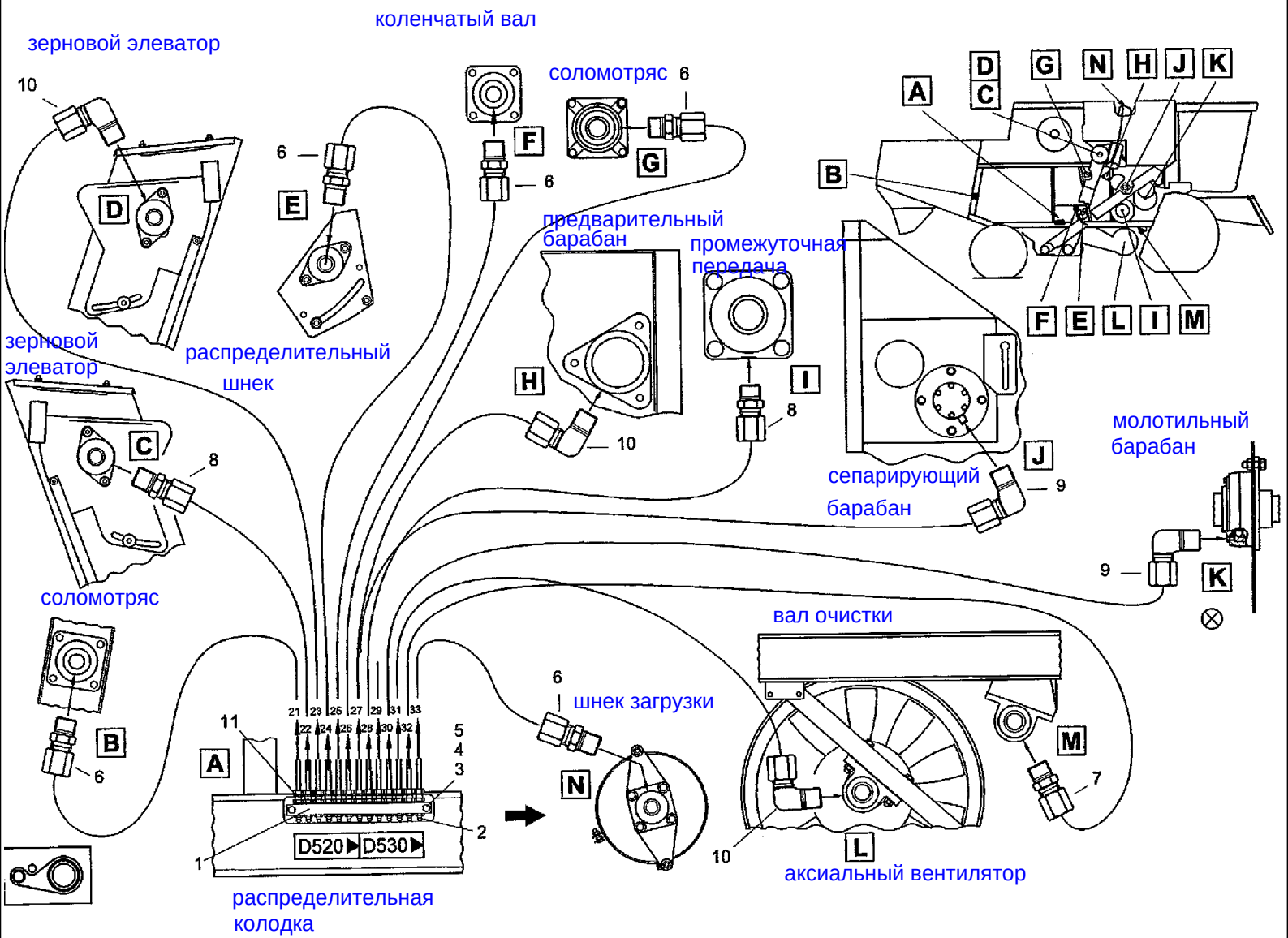
коленчатый вал
зерновой элеватор
соломотряс
предварительный барабан
промежуточная передача
зерновой элеватор
распределительный шнек
сепарирующий барабан
молотильный барабан
соломотряс
вал очистки
шнек загрузки
аксиальный вентилятор
распределительная колодка
D520
D530

CF80 CASE IH CROSS FLOW COMBINE

D510 CENTRAL LUBRICATION SYSTEM- NIPPLE BAR, RIGHT

Ref	Part Number	Qty	Description
1	31327228	1	RAMP, Nipple bar 13-FACH
2	03617097	13	NIPPLE, LUBE, Grease nippel BM10x1 DIN71412
3	864-6030	2	SCREW, Hex Soc Hd, M6 x 30, 8.8, Cheese-head screw M6X30DIN9128.8
4	06455742	2	WASHER, LOCK, Spring washer A6 DIN128 FST
5	825-1406	2	NUT, M6, Cl 8,
6	31327156	5	FITTING, Threaded joint GERADE M6K
7	03128065	1	FITTING, Threaded joint GERADEM8X1K
8	31327164	2	FITTING, Threaded joint GERADE R1/8ZOLL
9	03128040	2	ELBOW, Threaded joint WINKLIGM8x1K
10	31327180	3	FITTING, Threaded joint WINKLIG R1/8ZOLL
11	03128098	13	FITTING, Threaded joint GERADE M1 0x1 K
21	01451542	1	PIPE, Hose 3,3M6x1,5
22	01451542	1	PIPE, Hose 2,8M6x1,5
23	01451542	1	PIPE, Hose 3M6x1,5
24	01451542	1	PIPE, Hose 0,8M6x1,5
25	01451542	1	PIPE, Hose 0,8M6x1,5
26	01451542	1	PIPE, Hose 2,5M6x1,5
27	01451542	1	PIPE, Hose 2,6M6x1,5
28	01451542	1	PIPE, Hose 2,6M6x1,5
29	01451542	1	PIPE, Hose 2,7M6x1,5
30	01451542	1	PIPE, Hose 2,7M6x1,5
31	01451542	1	PIPE, Hose 2,1M6x1,5
32	01451542	1	PIPE, Hose 2,8M6x1,5
33	01451542	1	PIPE, Hose 5M6x1,5

D520(01) CENTRAL LUBRICATION SYSTEM, MANUAL- DISTRIBUTOR, WITH CHOPPER

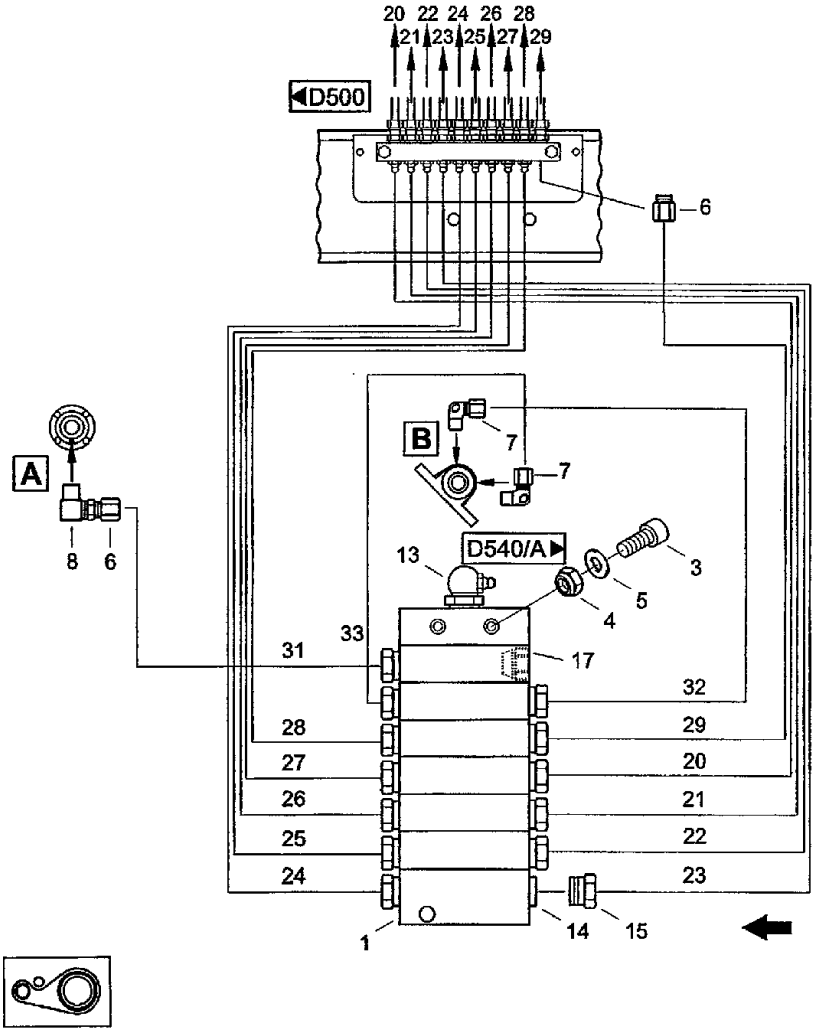

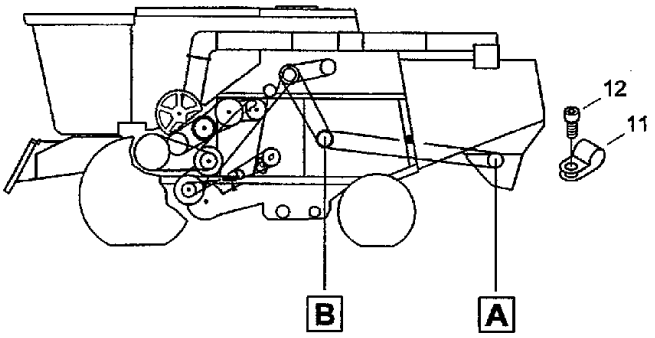

соломоизмельчитель

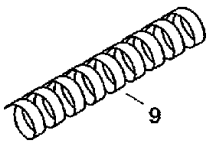

CF80 CASE IH CROSS FLOW COMBINE

D520(01) CENTRAL LUBRICATION SYSTEM, MANUAL- DISTRIBUTOR, WITH CHOPPER

Ref	Part Number	Qty	Description
1	31335076	1	VALVE BLOCK, Manifold block 7/13
2	31335084	1	VALVE BLOCK, Manifold block 8/14
3	864-5040	4	SCREW, Hex Soc Hd, M5 x 40, 8.8, Cheese-head screw M5x40 DIN912 8.8
4	03292381	4	SCREW, Hex nut M5 DIN985 8
5	895-11005	4	WASHER, M5 x 10 x 1, Washer 5.3DIN125ST
6	03128098	25	FITTING, Threaded joint GERADEM10X1K
7	31327180	2	FITTING, Threaded joint WINKLIG R1/8ZOLL
8	03128194	2	FITTING, Right-angle screwing M10x1K90GRAD
9	01451550	1	LOOM, Spiral hose 10M8
11	03126014	4	FIXING BRACKET, Pipe clip D1-9x12W1-1 DIN3016
12	864-5012	4	SCREW, Hex Soc Hd, M5 x 12, 8.8, Cheese-head screw M5x12 DIN912 8.8
13	03617031	2	NIPPLE, LUBE, Grease nippel CM10x1 DIN71412
14	03128354	29	NUT, TUBE, Bolt OS6M10X1
15	03128387	29	SEAT, Double conical ring DKR6
16	03128998	1	FITTING, Pipe bridge
17	03128313	1	SCREW, Locking screw
20	01451542	1	PIPE, Hose 1.5M 6x1,5
21	01451542	1	PIPE, Hose 1,5M6x1,5
22	01451542	1	PIPE, Hose 1,5M6x1,5
23	01451542	1	PIPE, Hose 1.5M 6x1,5
24	01451542	1	PIPE, Hose 1,3M6x1,5
25	01451542	1	PIPE, Hose 1,3M6x1,5
26	01451542	1	PIPE, Hose 1,3M6x1,5
27	01451542	1	PIPE, Hose 1,3M6x1.5
28	01451542	1	PIPE, Hose 1,3M6x1,5

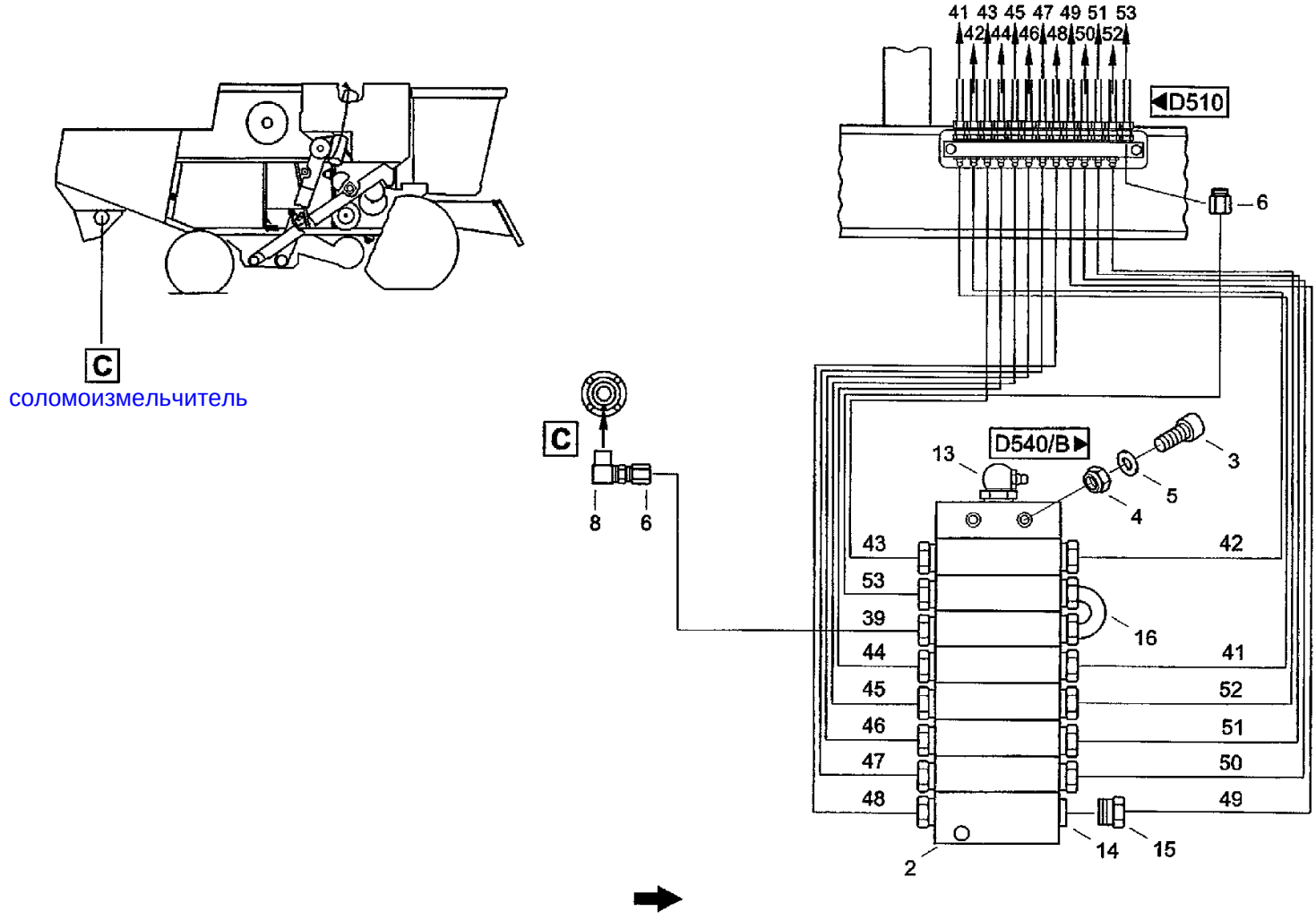
41 43 45 47 49 51 53
42 44 46 48 50 52
D510
6
C
соломоизмельчитель
C
8
6
D540/B
13
3
5
4
43
53
39
44
45
46
47
48
42
41
52
51
50
49
16
2
14
15

CF80 CASE IH CROSS FLOW COMBINE

D520(02) CENTRAL LUBRICATION SYSTEM, MANUAL- DISTRIBUTOR, WITH CHOPPER

Ref	Part Number	Qty	Description
29	01451542	1	PIPE, Hose 1,5M6x1,5
31	01451542	1	PIPE, Hose 4,8M6x1,5
32	01451542	1	PIPE, Hose 2,5M6x1,5
33	01451542	1	PIPE, Hose 2,8M6x1,5
39	01451542	1	PIPE, Hose 4,1M6x1,5
41	01451542	1	PIPE, Hose 1,2M6x1,5
42	01451542	1	PIPE, Hose 1,2M6x1,5
43	01451542	1	PIPE, Hose 0,95M6x1,5
44	01451542	1	PIPE, Hose 0,95M6x1,5
45	01451542	1	PIPE, Hose 0,95M6x1,5
46	01451542	1	PIPE, Hose 0,95M6x1,5
47	01451542	1	PIPE, Hose 0,95M6x1,5
48	01451542	1	PIPE, Hose 0,95M6x1,5
49	01451542	1	PIPE, Hose 1,2M6x1,5
50	01451542	1	PIPE, Hose 1,2M6x1,5
51	01451542	1	PIPE, Hose 1,2M6x1,5
52	01451542	1	PIPE, Hose 1,2M6x1,5
53	01451542	1	PIPE, Hose 0,95M6x1,5

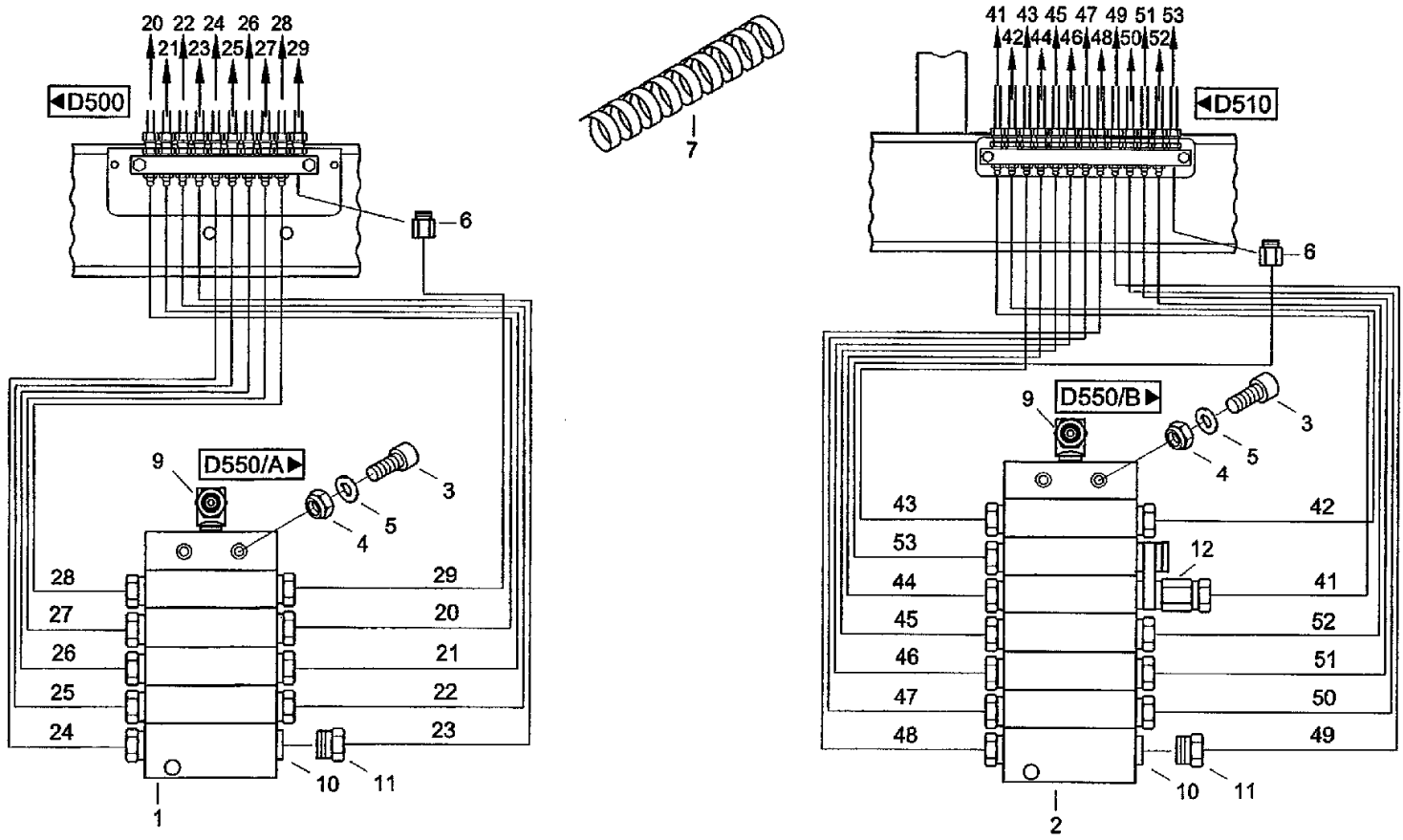
20 22 24 26 28
21 23 25 27 29
D500
6
9
D550/A
3
5
4
28
27
26
25
24
29
20
21
22
23
10
11
1
7
41 43 45 47 49 51 53
42 44 46 48 50 52
D510
6
9
D550/B
3
5
4
43
53
44
45
46
47
48
42
12
41
52
51
50
49
10
11
2

CF80 CASE IH CROSS FLOW COMBINE

D530(01) CENTRAL LUBRICATION SYSTEM, MANUAL- DISTRIBUTOR, WITHOUT CHOPPER

Ref	Part Number	Qty	Description
1	31335051	1	VALVE BLOCK, Manifold block 5/10
2	31335068	1	VALVE BLOCK, Manifold block 7/13
3	864-5040	4	SCREW, Hex Soc Hd, M5 x 40, 8.8, Cheese-head screw M5x40DIN9128.8
4	03292381	4	SCREW, Hex nut M5 DIN985 8
5	895-11005	4	WASHER, M5 x 10 x 1, Washer 5.3DIN125ST
6	03128098	23	FITTING, Threaded joint GERADEM10x1K
7	01451550	1	LOOM, Spiral hose 6M8
9	03617031	2	NIPPLE, LUBE, Grease nippel CM10x1 DIN71412
10	03128354	23	NUT, TUBE, Bolt GS6M10x1
11	03128387	23	SEAT, Double conical ring DKR6
12	03129515	1	FLOW-DIVIDER, Distributor bridge
20	01451542	1	PIPE, Hose 1,5M6x1,5
21	01451542	1	PIPE, Hose 1,5M6x1,5
22	01451542	1	PIPE, Hose 1,5M6x1,5
23	01451542	1	PIPE, Hose 1,5M6x1,5
24	01451542	1	PIPE, Hose 1,3M6x1,5
25	01451542	1	PIPE, Hose 1,3M6x1,5
26	01451542	1	PIPE, Hose 1,3M6x1,5
27	01451542	1	PIPE, Hose 1,3M6x1,5
28	01451542	1	PIPE, Hose 1,3M6x1,5
29	01451542	1	PIPE, Hose 1,5M6x1,5
41	01451542	1	PIPE, Hose 1,2M6x1,5
42	01451542	1	PIPE, Hose 1,2M6x1,5
43	01451542	1	PIPE, Hose 0,95M6x1,5
44	01451542	1	PIPE, Hose 0,95M6x1,5

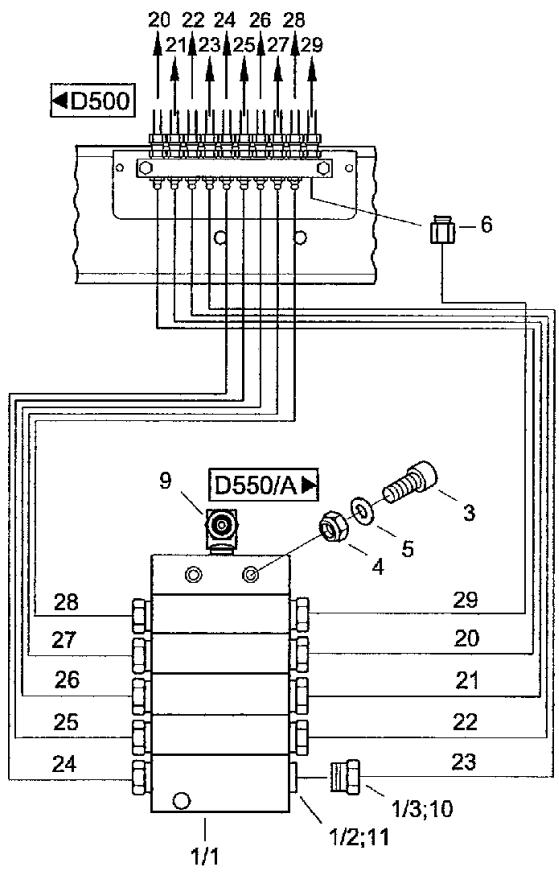
20 22 24 26 28
21 23 25 27 29
D500
6
9
D550/A
3
5
4
28
27
26
25
24
29
20
21
22
23
1/3;10
1/2;11
1/1

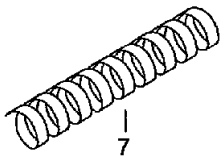
7

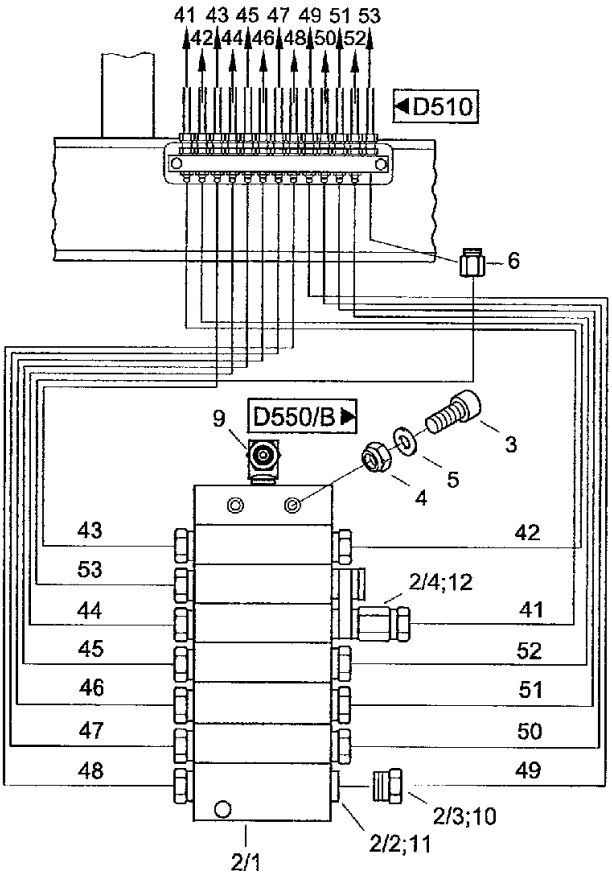
41 43 45 47 49 51 53
42 44 46 48 50 52
D510
6
9
D550/B
3
5
4
43
53
44
45
46
47
48
42
2/4;12
41
52
51
50
49
2/3;10
2/2;11
2/1

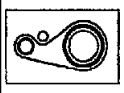

CF80 CASE IH CROSS FLOW COMBINE

D530(02) CENTRAL LUBRICATION SYSTEM, MANUAL- DISTRIBUTOR, WITHOUT CHOPPER

Ref	Part Number	Qty	Description
45	01451542	1	PIPE, Hose 0,95M6x1,5
46	01451542	1	PIPE, Hose 0,95M6x1,5
47	01451542	1	PIPE, Hose 0,95M6x1,5
48	01451542	1	PIPE, Hose 0,95M6x1,5
49	01451542	1	PIPE, Hose 1,2M6x1,5
50	01451542	1	PIPE, Hose 1,2M6x1,5
51	01451542	1	PIPE, Hose 1,2M6x1,5
52	01451542	1	PIPE, Hose 1,2M6x1,5
53	01451542	1	PIPE, Hose 0,95M6x1,5

D540 CENTRAL LUBRICATION SYSTEM, AUTOMATIC- WITH CHOPPER

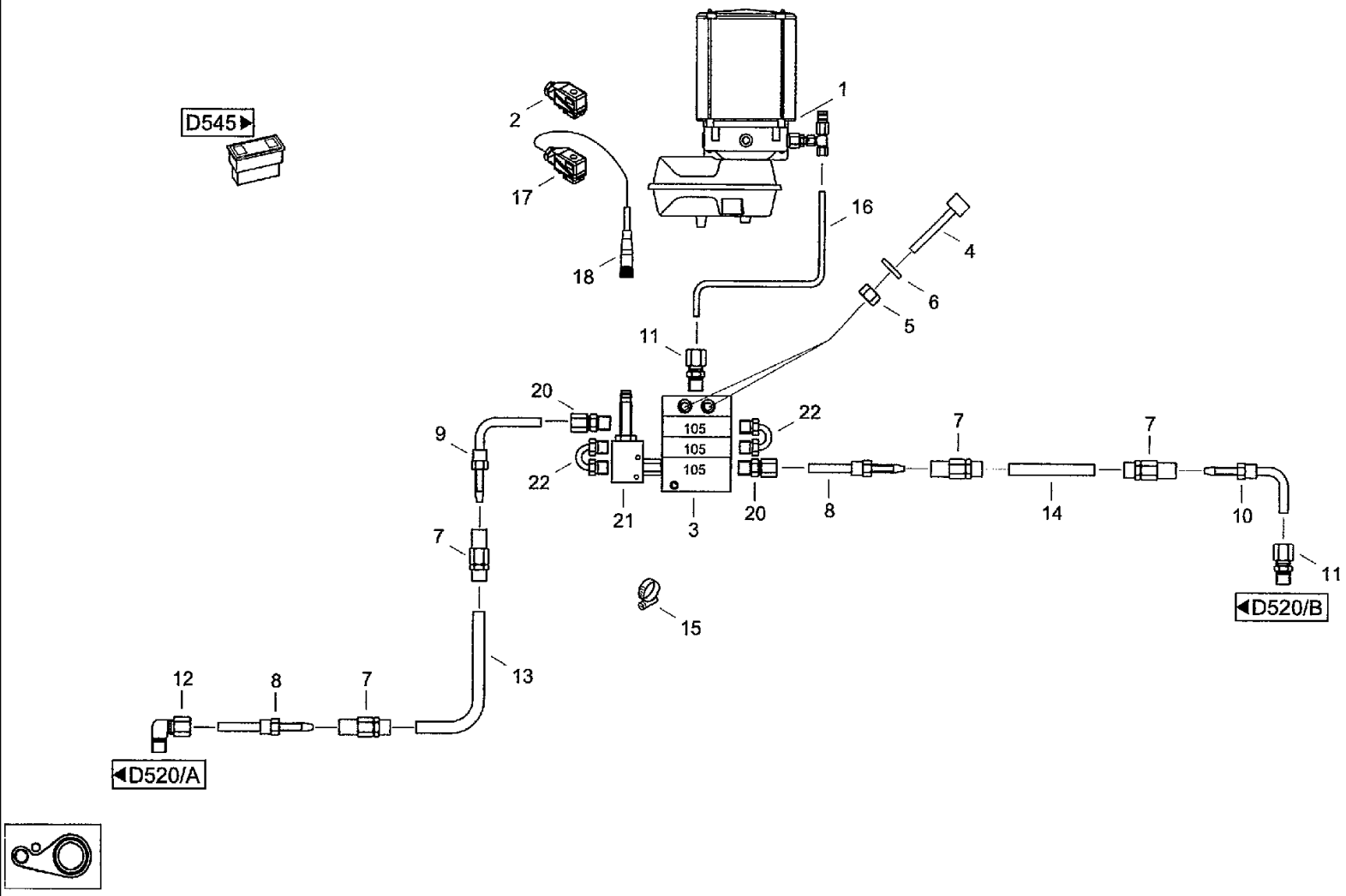

CF80 CASE IH CROSS FLOW COMBINE

D540 CENTRAL LUBRICATION SYSTEM, AUTOMATIC- WITH CHOPPER

Ref	Part Number	Qty	Description
1	31351806	1	PUMP, Electric pump EP-1 12V2.5KGPE120
2	31351814	1	SOCKET/RECEPTACLE, Branch box GO070WF
3	31349338	1	DISTRIBUTOR, Rail lubrication 3/2
4	864-5040	2	SCREW, Hex Soc Hd, M5 x 40, 8.8, Cheese-head screw M5X40DIN9128.8
5	03292381	2	SCREW, Hex nut M5 DIN985 8
6	895-11005	2	WASHER, M5 x 10 x 1, Washer 5.3DIN125ST
7	03124221	4	SLEEVE, Srew socket 8,3x2,1
8	03128290	2	FITTING, Tube
9	31351830	1	FITTING, Tube 90GRAD
10	31351847	1	FITTING, Tube 90GRAD
11	03128098	1	FITTING, Threaded joint GERADEM10x1K
12	03128057	1	ELBOW, Threaded joint WINKLIGM10x1K
13	01451534	1	HOSE, High pressure hose 7,5M 8,6x2,1
14	01451534	1	HOSE, High pressure hose 2,5M 8,6x2,1
15	03269776	24	CLAMP, Hose binder 200mm
16	31351855	1	TUBE ASSY., Steel tube 6x1
17	31351863	1	SOCKET/RECEPTACLE, Branch box 6-POLIG
18	31351871	1	HARNESS, Ground strap
20	03128321	1	VALVE, Valve check M.SCHNEIDRING UBERW URFMU
21	31351896	1	SWITCH, Proximity switch M.KLEMMGEHAUSE
22	03128998	1	FITTING, Pipe bridge

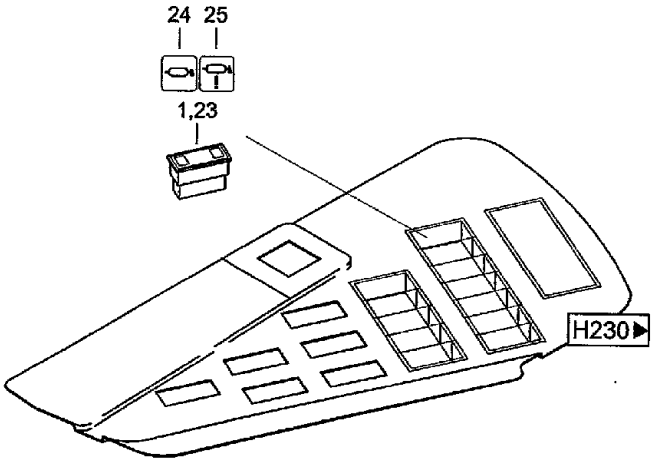

D550
D540

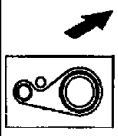

CF80 CASE IH CROSS FLOW COMBINE

D545 CENTRAL LUBRICATION SYSTEM, AUTOMATIC- ELECTRICAL EQUIPMENT

Ref	Part Number	Qty	Description
1	07070453	2	SOCKET, Socket 12VM.FASSUNG
23	98045825	1	NO DESCRIPTION, Indicator light 12V2-FACH
24	31350411	1	SYMBOLS, Switch insert
25	31350428	1	SYMBOLS, Switch insert

D550 CENTRAL LUBRICATION SYSTEM, AUTOMATIC- WITHOUT CHOPPER

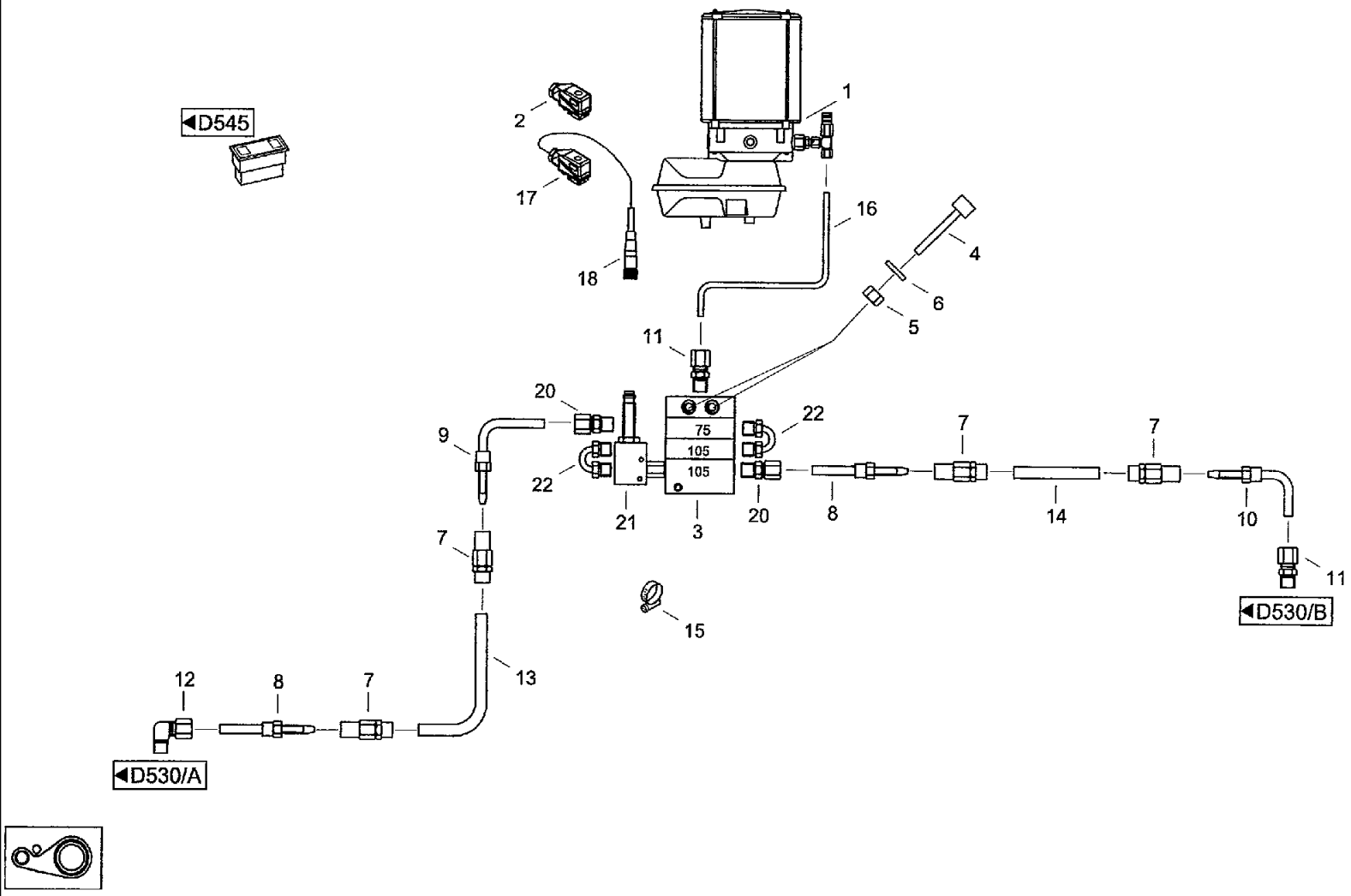

CF80 CASE IH CROSS FLOW COMBINE

D550 CENTRAL LUBRICATION SYSTEM, AUTOMATIC- WITHOUT CHOPPER

Ref	Part Number	Qty	Description
1	31351806	1	PUMP, Electric pump EP-1 12V2.5KGPE120
2	31351814	1	SOCKET/RECEPTACLE, Branch box GO070WF
3	31351822	1	DISTRIBUTOR, Rail lubrication 3/2
4	864-5040	2	SCREW, Hex Soc Hd, M5 x 40, 8.8, Cheese-head screw M5x40 DIN912 8.8
5	03292381	2	SCREW, Hex nut M5 DIN985 8
6	895-11005	2	WASHER, M5 x 10 x 1, Washer 5,3 DIN125 ST
7	03124221	4	SLEEVE, Srew socket 8,3x2,1
8	03128290	2	FITTING, Tube
9	31351830	1	FITTING, Tube 90GRAD
10	31351847	1	FITTING, Tube 90GRAD
11	03128098	1	FITTING, Threaded joint GERADEM10x1K
12	03128057	1	ELBOW, Threaded joint WINKLIGM10x1K
13	01451534	1	HOSE, High pressure hose 7,5M 8,6x2,1
14	01451534	1	HOSE, High pressure hose 2,5M 8,6x2,1
15	03269776	24	CLAMP, Hose binder 200mm
16	31351855	1	TUBE ASSY., Steel tube 6x1
17	31351863	1	SOCKET/RECEPTACLE, Branch box 6-POLIG
18	31351871	1	HARNESS, Ground strap
20	03128321	1	VALVE, Valve check M.SCHNEIDRING OBERW URFMU
21	31351896	1	SWITCH, Proximity switch M.KLEMMGEHAUSE
22	03128998	1	FITTING, Pipe bridge

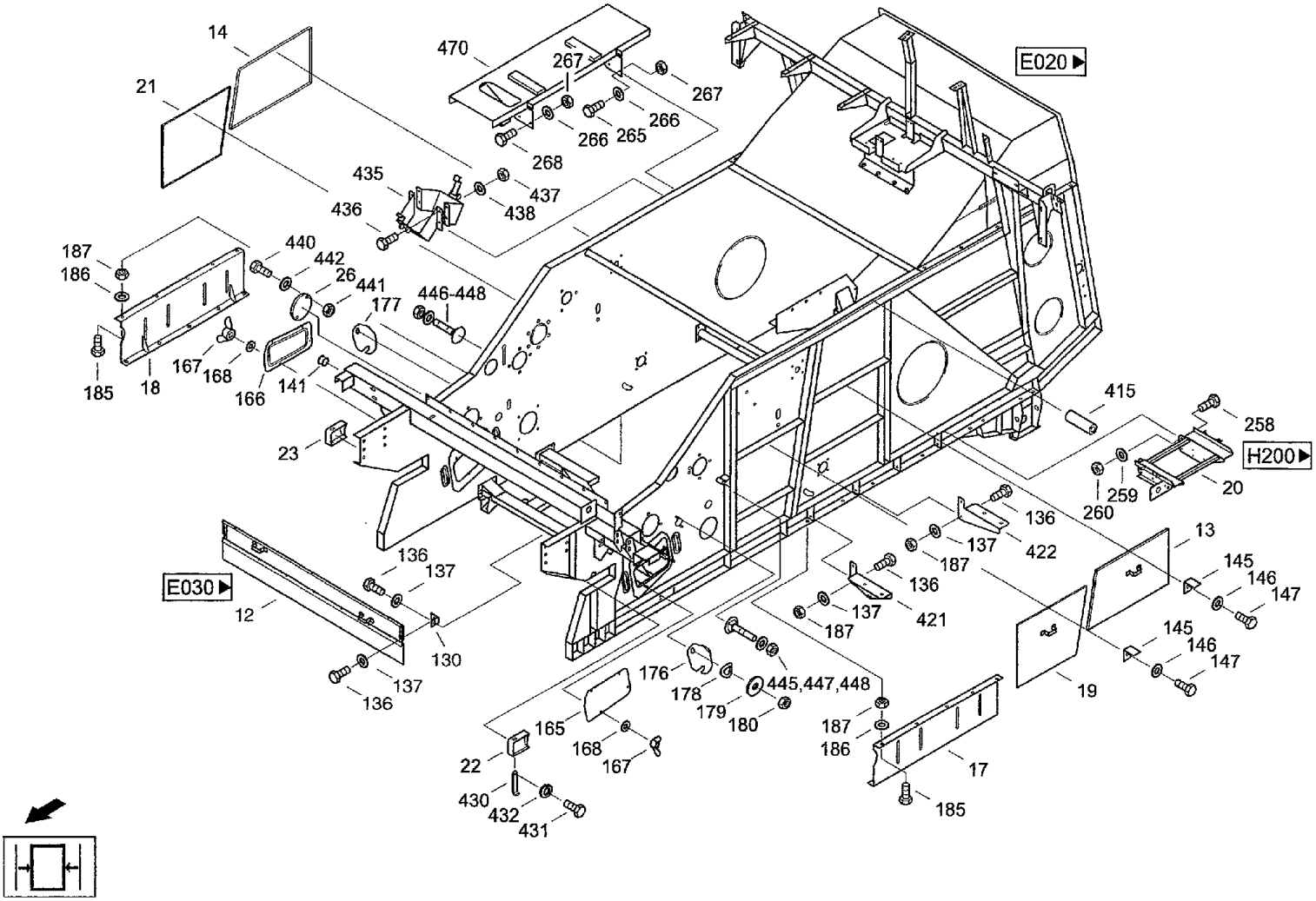
14
21
470
267
267
266
265
266
268
435
437
436
438
187
186
440
442
26
441
177
446-448
185
18
167
168
166
141
23
E020
415
258
H200
260
259
20
136
137
422
187
136
421
137
187
13
145
146
147
145
146
147
19
E030
12
136
137
130
137
136
176
178
179
180
445,447,448
165
168
167
22
430
432
431
187
186
17
185

CF80 CASE IH CROSS FLOW COMBINE

E010(01) RUNNING GEAR- VARIOUS COMPONENTS

Ref	Part Number	Qty	Description	
12	060102827	1	FLAP, Drum flap	e001-03,00,000 клапан
13	061077212	1	COVER, Cap	e001-08.00.000 крышка задняя л.
14	061077567	1	COVER, Cap r	e001-07.00.000 крышка задняя пр.
17	061077237	1	WALL, Wall 1, KASTEN	c017-04.00.000 стенка
18	061077245	1	WALL, Wall r, KASTEN	c017-04.00.000-01 стенка
19	061077591	1	COVER, Cap 1, v	e001-06.00.000 крышка передняя л.
20	31291770	1	FRAME, Frame	e001-09.00.000 рама
21	061077606	1	COVER, Cap r, v	e001-05.00.000 крышка передняя пр.
22	061077622	1	HOLDER, Elevator housing holder 1	e001-04.00.000 держатель
23	061077630	1	HOLDER, Elevator housing holder r	
26	31333267	1	COVER, Cap r	e001-00.00.006 крышка
130	060012608	2	SHIN, Strap	
136	614-10020	4	BOLT, Hex, M10 x 20, 8.8, Full Thd,	
137	06577052	4	WASHER, SPECIAL, Locking washer B10	
141	01147648	1	GROMMET, Grommet A12x4	
145	31295661	4	ANGLE, Closure	e001-00.00.004 запор
146	06577052	4	WASHER, SPECIAL, Locking washer B10	
147	614-10022	4	BOLT, Hex, M10 x 22, 8.8, Full Thd, Hex bolt M10x22ISO40178.8	
165	31306721	1	COVER, Cap l	e001-02.00.000-01 крышка
166	31306787	1	COVER, Cap r	e001-02.00.000 крышка
167	006026836	8	SCREW, Thumb screw M8X10-ST-C-A3CDIN316	
168	06577028	8	WASHER, SPECIAL, Locking washer M8	
176	31287942	1	SHIN, Strap l	5550-0000:216/03 накладка
177	31287950	1	SHIN, Strap r	5550-0000:217/03 накладка
178	06501380	2	WASHER, CUP, Wave washer spring B8DIN137FST	

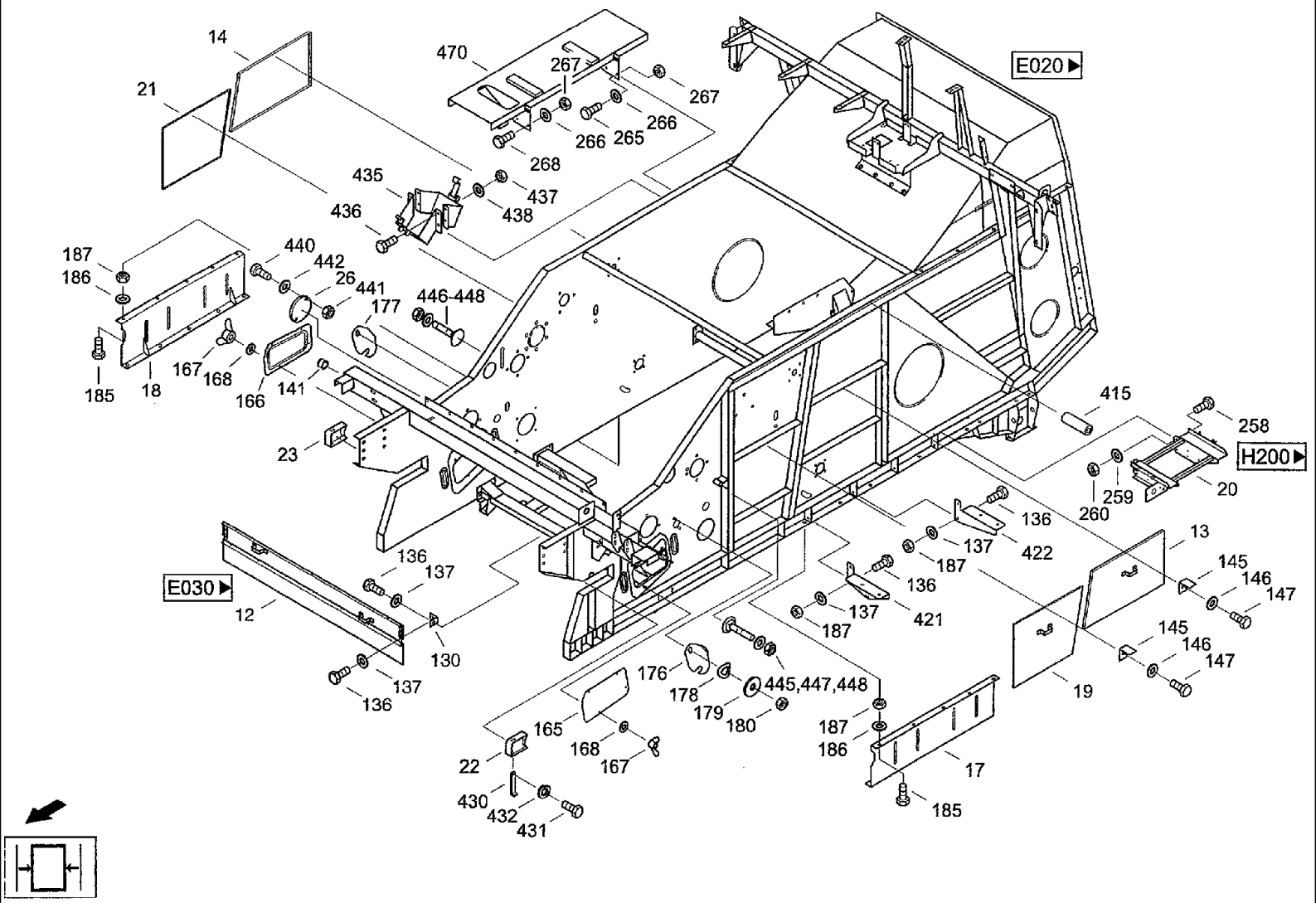
14
21
470
267
267
266
265
266
268
435
437
438
436
187
186
440
442
26
441
177
446-448
185
18
167
168
166
141
23
E020
415
258
H200
259
260
20
136
137
422
187
136
421
137
187
13
145
146
147
145
146
147
19
E030
12
136
137
130
137
136
176
178
179
180
445,447,448
165
168
167
22
430
432
431
187
186
17
185

CF80 CASE IH CROSS FLOW COMBINE

E010(02) RUNNING GEAR- VARIOUS COMPONENTS

Ref	Part Number	Qty	Description
179	895-25008	2	WASHER, M8 x 20 x 1.6, Washer 8,4 DIN9021 140HV
180	825-1408	2	NUT, M8, Cl 8,
185	614-10025	14	BOLT, Hex, M10 x 25, 8.8, Full Thd, Hex bolt M1 0x25 ISO4017 8.8
186	06577052	14	WASHER, SPECIAL, Locking washer B10
187	825-1410	14	NUT, M10, Cl 8,
258	006348186	4	SCREW, Hex bolt M12x22 ISO4017 10.9
259	06577060	4	WASHER, Locking washer B12
260	829-1412	4	NUT, M12, Cl 10, Hex nut M12 ISO4032 10
265	614-12030	6	BOLT, Hex, M12 x 30, 8.8, Hex bolt M12X30ISO40178.8
266	06577060	7	WASHER, Locking washer B12
267	825-1412	7	NUT, M12, Cl 8, Hex nut M12 IS04032 8
268	614-10035	1	SCREW, Hex, M10 x 35, 8.8, Full Thd,
415	31323152	1	HOSE, Connecting hose DIN 7341 1-1
421	31285651	1	PLATE, Arm V e001-00.00.002 кронштейн
422	31285668	1	PLATE, Arm h e001-00.00.001 кронштейн
430	060032242	2	HOOK, Hook
431	614-8016	2	BOLT, Hex, M8 x 16, 8.8,
432	892-11008	2	WASHER, LOCK, M8, Spring washer A8 DIN 127 FST
435	060519021	2	HOLDER, Bracket F53 DIN76051 фв-11.06.00 кронштейн
436	614-8020	8	BOLT, Hex, M8 x 20, 8.8, Hex bolt M8x20ISO40178.8
437	825-1408	8	NUT, M8, Cl 8,
438	06577044	8	WASHER, SPECIAL, Locking washer B8
440	614-6016	2	BOLT, Hex, M6 x 16, 8.8,
441	825-1406	2	NUT, M6, Cl 8,
442	06577124	2	WASHER, Locking washer B6

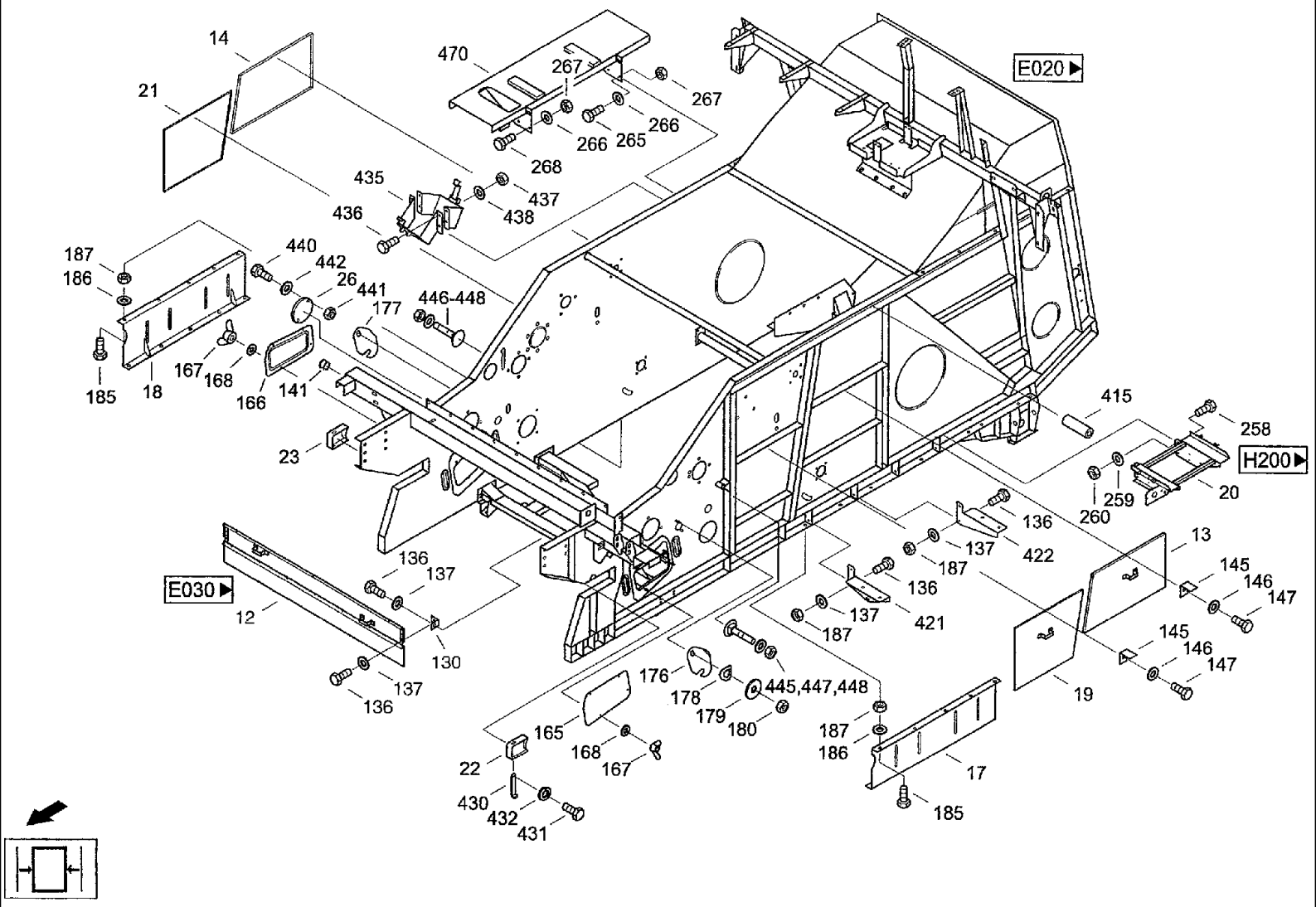
14
21
470
267
267
266
266
265
268
435
437
436
438
187
186
440
442
26
441
177
446-448
185
18
167
168
166
141
23
E020
415
258
H200
259
260
20
136
137
422
187
136
421
137
187
13
145
146
147
145
146
147
19
E030
12
136
137
130
137
136
176
178
179
180
445,447,448
165
168
167
22
430
432
431
187
186
17
185

CF80 CASE IH CROSS FLOW COMBINE

E010(03) RUNNING GEAR- VARIOUS COMPONENTS

Ref	Part Number	Qty	Description
445	07753203	1	SCREW, Flat-round-head screw M8x60 DIN603 8.8
446	07753211	1	SCREW, Flat-round-head screw M8x25 DIN603 8.8
447	825-1408	2	NUT, M8, Cl 8,
448	06577044	2	WASHER, SPECIAL, Locking washer B8
470	31300484	1	SUPPORT, Tank support e001-01.00.000 подставка

CF80 CASE IH CROSS FLOW COMBINE

E020(01) RUNNING GEAR- FRAME

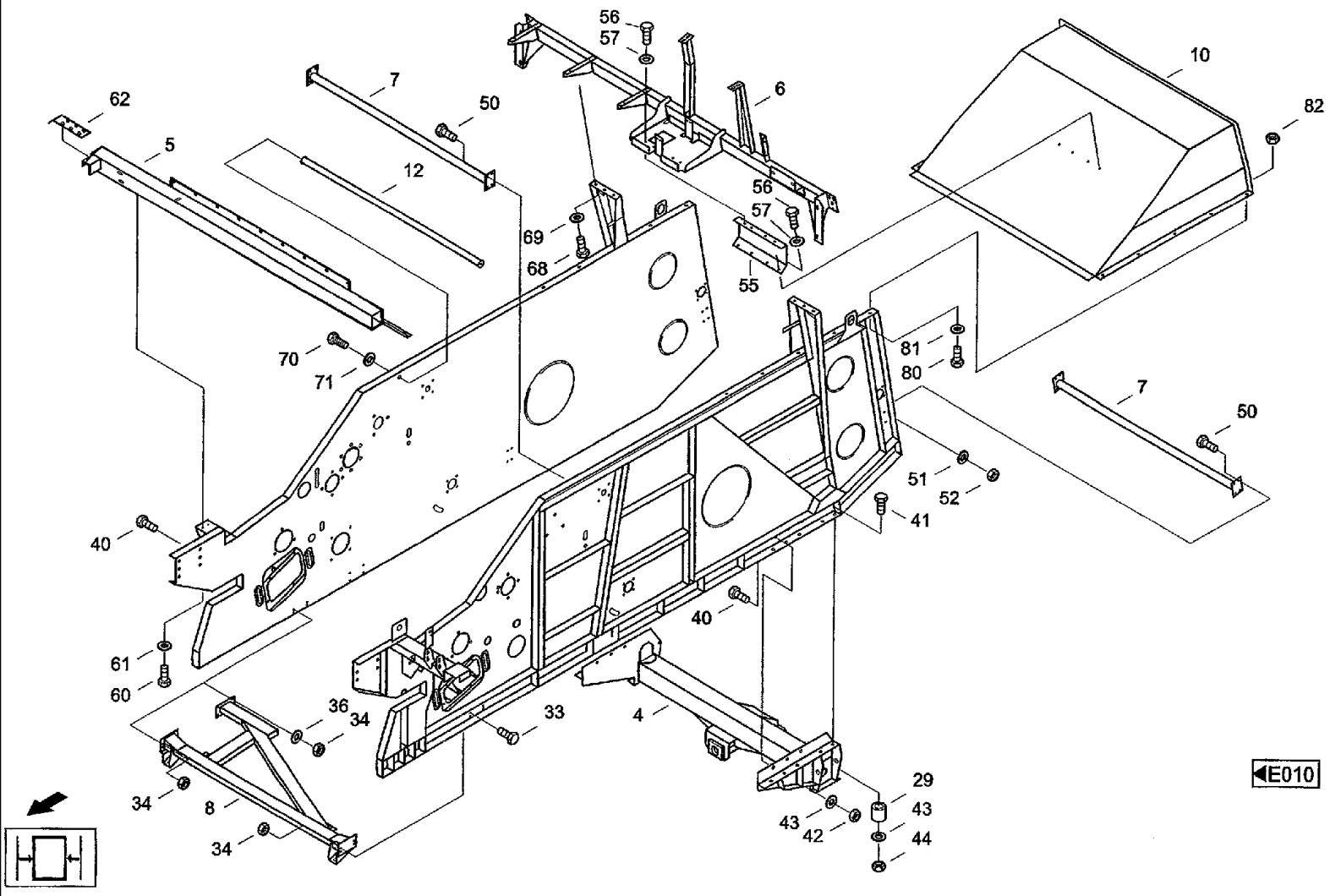

CF80 CASE IH CROSS FLOW COMBINE

E020(01) RUNNING GEAR- FRAME

Ref	Part Number	Qty	Description
4	31287202	1	SUPPORT, Steering axle carrier 528-40104:000/00 несущий брус рулевого моста
5	061073707	1	CARRIER, Crossbar e002-05.00.000 поперечный брус
6	061077108	1	BRIDGE, Reinforcing bar e002-06.00.000 брус
7	061001895	2	CROSSBAR, Cross beam e002-08.00.000 перемычка
8	061069696	1	CROSSBAR, Diagonal traverse e002-04.00.000 диагональное соединение
10	061077374	1	HOOD, Vibratory hood e002-07.00.000 колпак соломотряса
12	31287356	1	SUPPORT, Crosslink o e002-09,00,000 распорка
29	31287210	10	BUSHING, Sleeve
33	614-12035	12	BOLT, Hex, M12 x 35, 8.8, Full Thd, Hex bolt M12x351SO40178.8
34	825-1412	20	NUT, M12, Cl 8, Hex nut M12 ISO4032 8
36	06577060	2	WASHER, Locking washer B12
40	614-12035	6	BOLT, Hex, M12 x 35, 8.8, Full Thd, Hex bolt M12x351804017 8.8
41	060159545	10	SCREW, Hex bolt M12x1,5x70ISO867610.9
42	825-1412	6	NUT, M12, Cl 8, Hex nut M12 IS04032 8
43	06577060	32	WASHER, Locking washer B12
44	06215873	10	NUT, Hex nut M12x1,5ISO867310
50	614-10025	16	BOLT, Hex, M10 x 25, 8.8, Full Thd, Hex bolt M10x25ISO40178.8
51	06577052	16	WASHER, SPECIAL, Locking washer B10
52	825-1410	16	NUT, M10, Cl 8,
55	061068051	1	PLATE, LARGE, Supporting plate
56	614-10016	8	BOLT, Hex, M10 x 16, 8.8, Full Thd, Hex bolt M10x16ISO40178.8
57	06577003	8	WASHER, SPECIAL, Locking washer M10
60	614-10030	12	BOLT, Hex, M10 x 30, 8.8,
61	06577052	12	WASHER, SPECIAL, Locking washer B10
62	060012585	2	SUPPORT, Holder-up
63		1	e001-01.00.000 боковина правая
64		1	e002-02.00.000 боковина левая

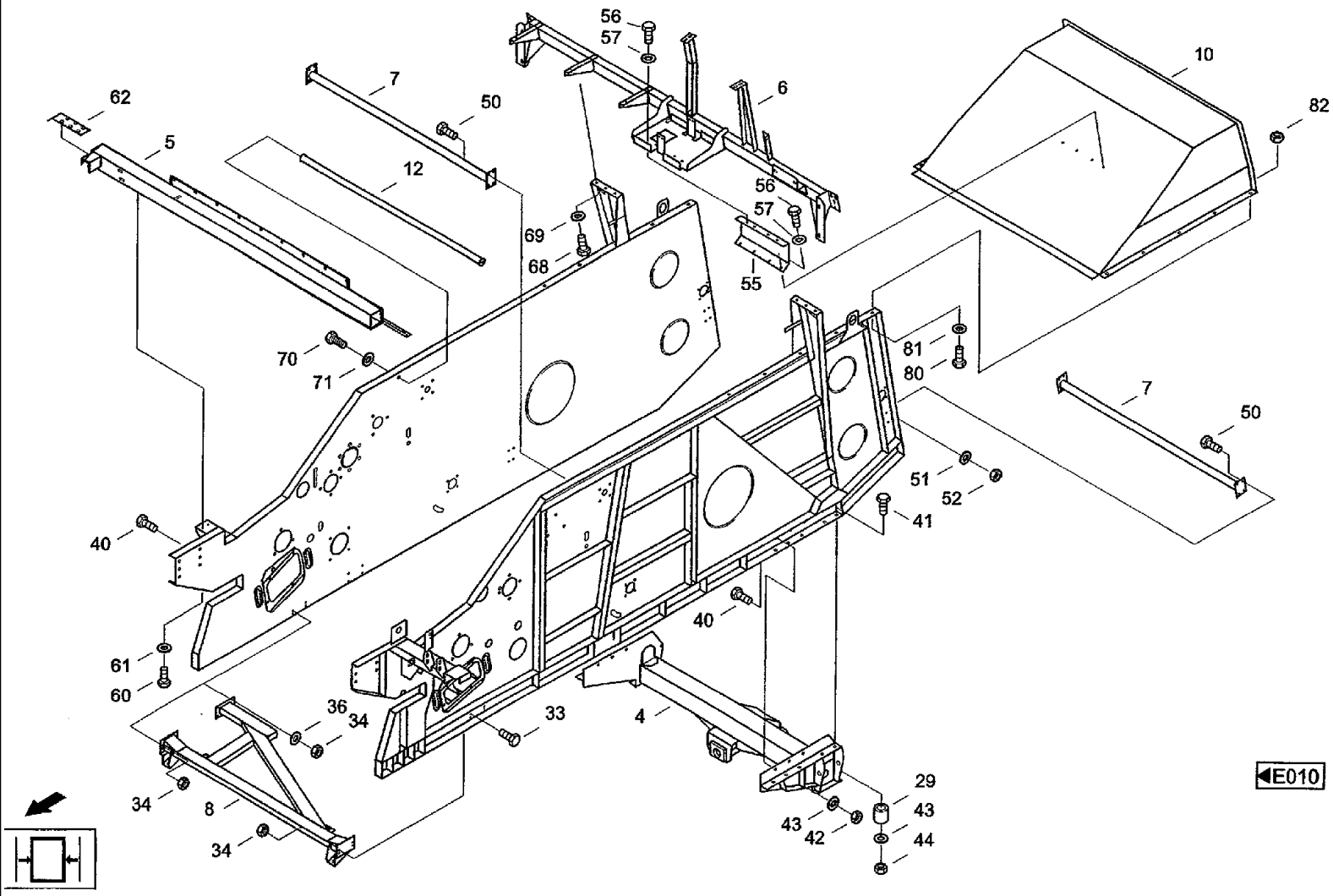
56
57
7
50
62
5
12
6
10
82
56
57
69
68
55
70
71
81
80
7
50
51
52
41
40
40
61
60
36
34
33
4
34
8
34
29
43
42
43
44
E010

CF80 CASE IH CROSS FLOW COMBINE

E020(02) RUNNING GEAR- FRAME

Ref	Part Number	Qty	Description
68	614-12025	6	BOLT, Hex, M12 x 25, 8.8, Hex bolt M12x25 ISO4017 8.8
69	06577060	6	WASHER, Locking washer B12
70	614-12025	2	BOLT, Hex, M12 x 25, 8.8, Hex bolt M12x25ISO40178.8
71	06577060	2	WASHER, Locking washer B12
80	614-8020	9	BOLT, Hex, M8 x 20, 8.8, Hex bolt M8X20IS040178.8
81	06577044	18	WASHER, SPECIAL, Locking washer B8
82	825-1408	9	NUT, M8, Cl 8,

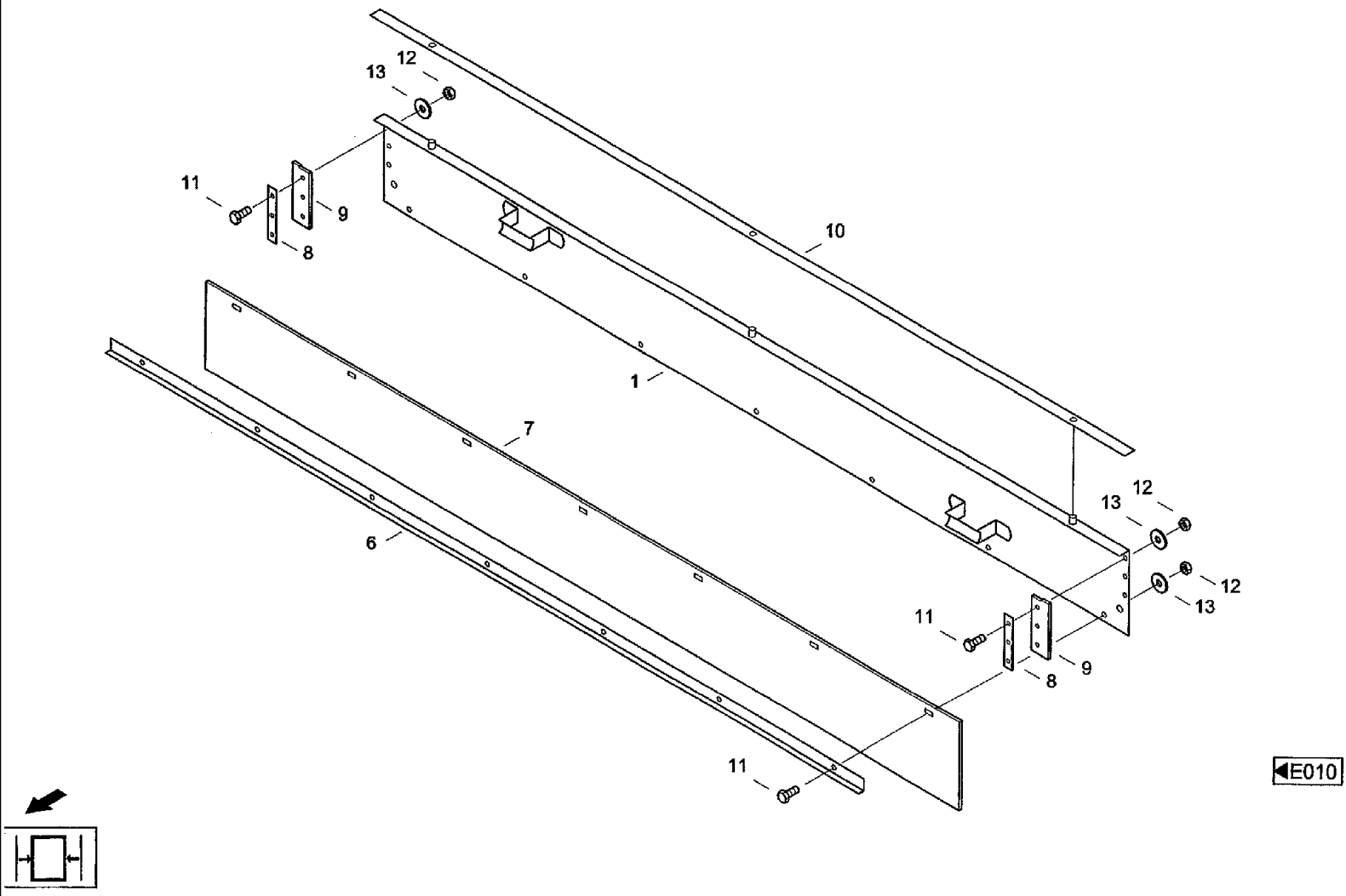
12
13
11
9
8
10
1
7
6
12
13
12
13
11
9
8
11
E010

CF80 CASE IH CROSS FLOW COMBINE

E030 RUNNING GEAR- DRUM FLAP

Ref	Part Number	Qty	Description
1	060102835	1	FLAP, Door e001-03.00.100 заслонка
6	060102851	1	ANGLE, Sheet angle e001-03.00.001 уголок
7	060102868	1	SHEET, Flap piece e001-03.00.002 пластина
8	060014796	2	PLATE, LEDGER, Side panel 524-40112:008/04 боковая пластина
9	060014802	2	PAD, RUBBER, Side rubber 524-40112:009/04 резина боковины
10	060102876	1	STRIP, SEALING, Sealing strip e001-03.00.003 уплотнительная полоса
11	614-6020	13	BOLT, Hex, M6 x 20, 8.8, Hex bolt M6X20ISO40178.8
12	825-1406	13	NUT, M6, Cl 8,
13	895-25006	13	WASHER, M6 x 18 x 1.6, Washer 6,4 DIN9021 646092 шайба
14		2	ПЛАСТИНА 524-40100:130/04
15		15	ШАЙБА

E050(01) RUNNING GEAR- TRIM, LEFT

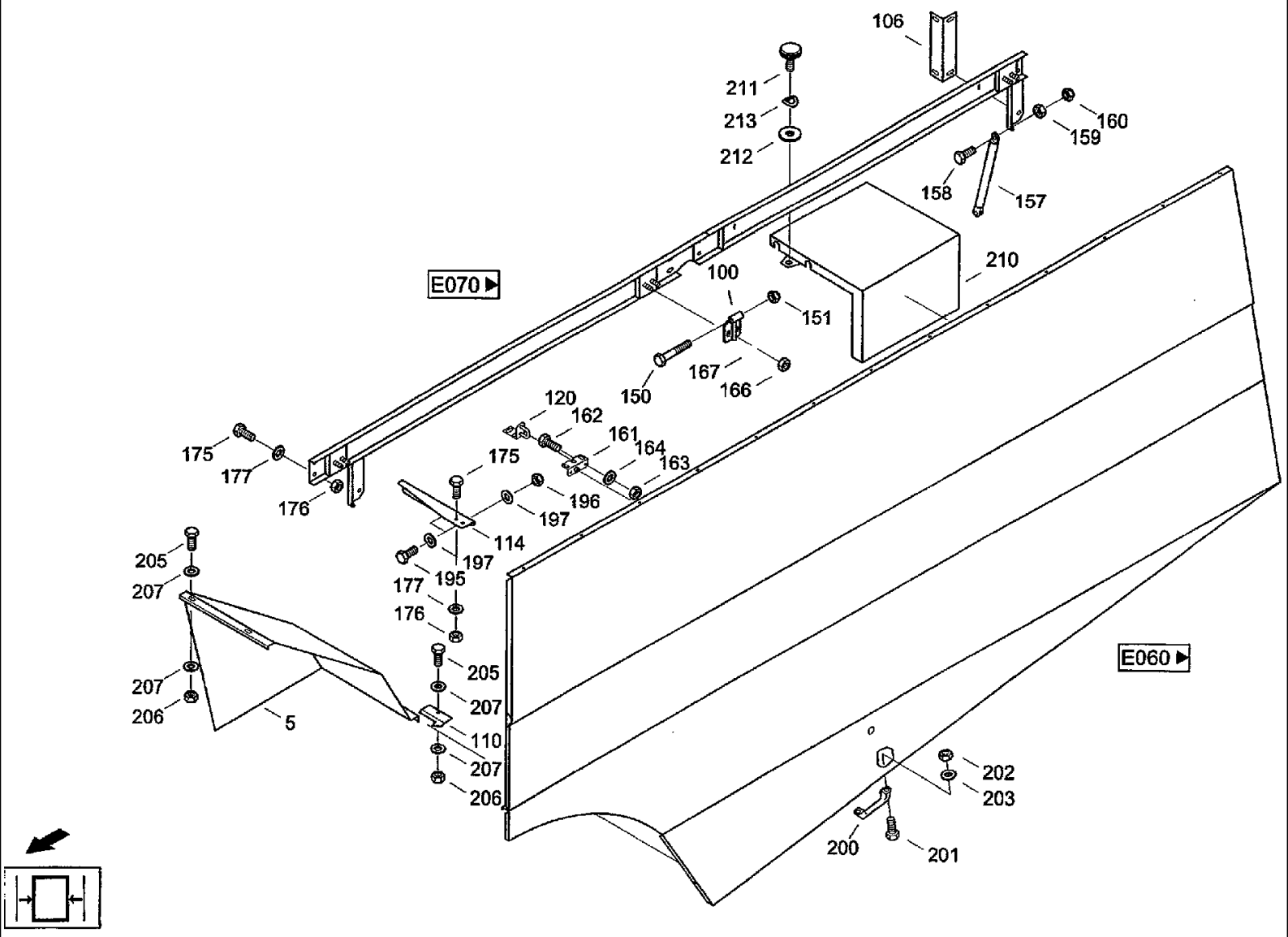

CF80 CASE IH CROSS FLOW COMBINE

E050(01) RUNNING GEAR- TRIM, LEFT

Ref	Part Number	Qty	Description
5	31292505	1	PROTECTION PLATE, Guard
10	31296726	1	SHEET, Side panel
11	31305786	1	WALL, Rear wall
75	31318372	2	PLATE, Plate
76	31318380	1	PLATE, Plate
100	061066355	3	HINGE, Hinge
106	061073194	1	ANGLE BAR, Angle
110	31293491	1	ANGLE BAR, Angle
113	31301444	1	ANGLE BAR, Angle
114	31299560	1	SUPPORT, Retaining arm
115	31307706	1	ANGLE, Angle
116	31307714	1	ANGLE, Angle
120	060184257	1	SUPPORT, Bracket
150	814-10080	3	BOLT, Hex, M10 x 80, 8.8,
151	832-10410	3	NUT, LOCK, M10 x 1.5, Cl 8,
152	895-11006	2	WASHER, M6, Washer 6.4DIN125ST
153	01139752	2	BUFFER, RUBBER, Rubber stop FUSS25 FORM1821
154	06004285	2	SCREW, Cheese-head screw M6X25 DIN84 4.8
155	825-1406	2	NUT, M6, Cl 8,
156	06577036	2	WASHER, SPECIAL, Locking washer M6
157	060533993	2	CYLINDER, GAS, Gas pressure spring G14 28 0250 1 0650 GA 40 BA16
158	614-8040	4	BOLT, Hex, M8 x 40, 8.8, Full Thd, Hex, M8 x 40, 8.8, Full Thd
159	825-1408	2	NUT, M8, Cl 8,
160	832-10408	4	NUT, M8 x 1.25, Cl 8, Hex nut M8 DIN982 8
161	060508830	1	LOCK ASSY, Tailgate lock

E050(02) RUNNING GEAR- TRIM, LEFT

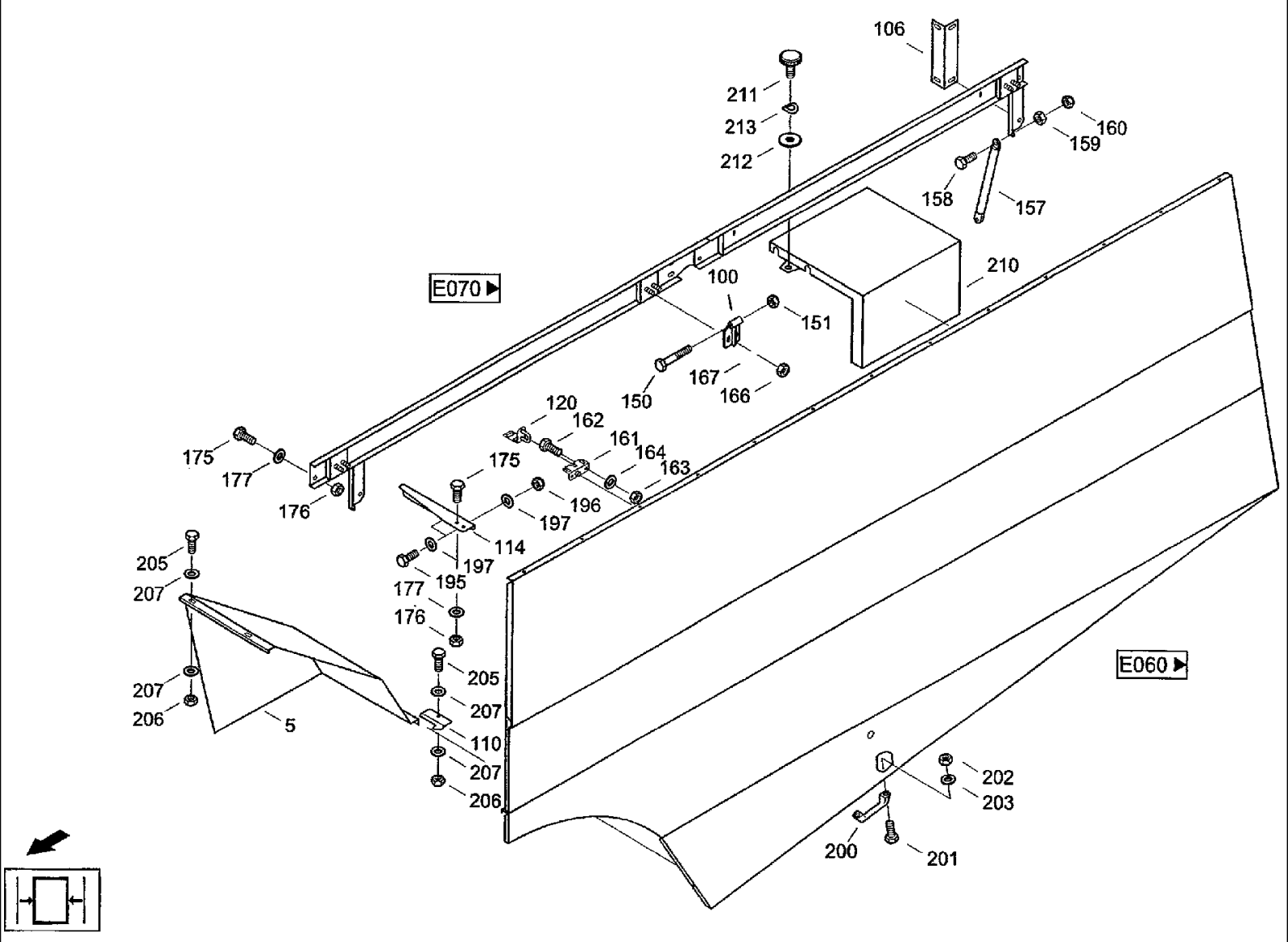

CF80 CASE IH CROSS FLOW COMBINE

E050(02) RUNNING GEAR- TRIM, LEFT

Ref	Part Number	Qty	Description
162	614-8020	4	BOLT, Hex, M8 x 20, 8.8, Hex bolt M8x20 ISO4017 8.8
163	825-1408	4	NUT, M8, Cl 8,
164	06577044	4	WASHER, SPECIAL, Locking washer B8
166	825-1410	6	NUT, M10, Cl 8,
167	06577003	6	WASHER, SPECIAL, Locking washer M10
175	614-10025	10	BOLT, Hex, M10 x 25, 8.8, Full Thd, Hex bolt M10X25ISO40178.8
176	825-1410	10	NUT, M10, Cl 8,
177	06577003	18	WASHER, SPECIAL, Locking washer M10
180	614-8016	14	BOLT, Hex, M8 x 16, 8.8,
181	614-8025	2	BOLT, Hex, M8 x 25, 8.8,
182	825-1408	16	NUT, M8, Cl 8,
183	06577028	25	WASHER, SPECIAL, Locking washer M8
195	614-8020	2	BOLT, Hex, M8 x 20, 8.8, Hex bolt M8x20 ISO4017 8.8
196	825-1408	1	NUT, M8, Cl 8,
197	06577044	3	WASHER, SPECIAL, Locking washer B8
200	060510415	1	HANDLE, Handle HAPPICH- 581 0062
201	614-6016	2	BOLT, Hex, M6 x 16, 8.8,
202	825-1406	2	NUT, M6, Cl 8,
203	06577036	2	WASHER, SPECIAL, Locking washer M6
205	614-8020	4	BOLT, Hex, M8 x 20, 8.8, Hex bolt M8X20 ISO4017 8.8
206	825-1408	4	NUT, M8, Cl 8,
207	06577044	8	WASHER, SPECIAL, Locking washer B8
210	061004125	1	COVER, Battery cover
211	060501631	2	SCREW, Knurled screw M6x12-ST DIN464
212	895-25006	2	WASHER, M6 x 18 x 1.6, Washer 6,4 DIN9021

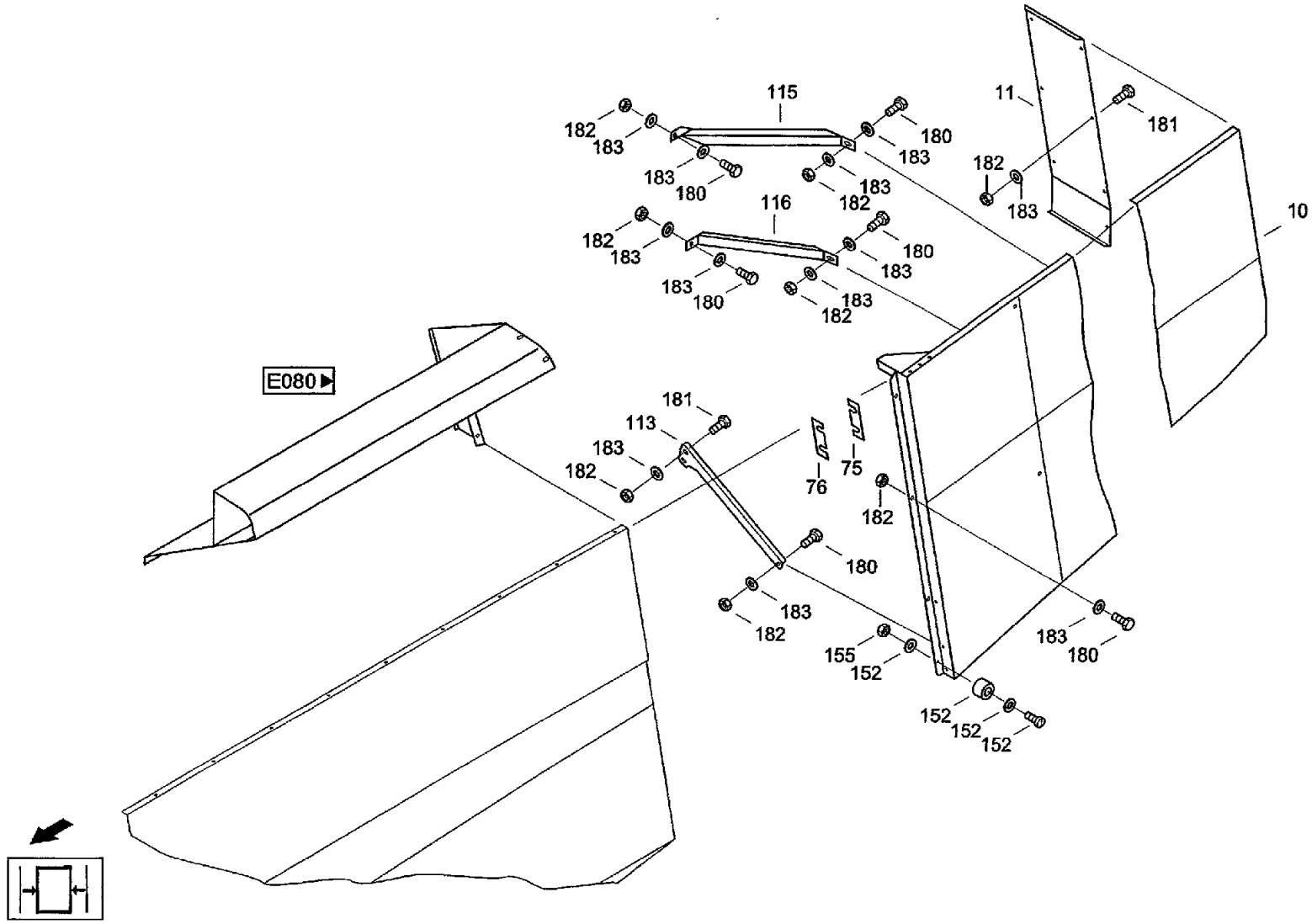
115
182
183
180
116
11
181
10
E080
113
75
76
155
152

CF80 CASE IH CROSS FLOW COMBINE

E050(03) RUNNING GEAR- TRIM, LEFT

Ref	Part Number	Qty	Description
213	06501397	2	WASHER, SPRING, Wave washer spring B6DIN137FST

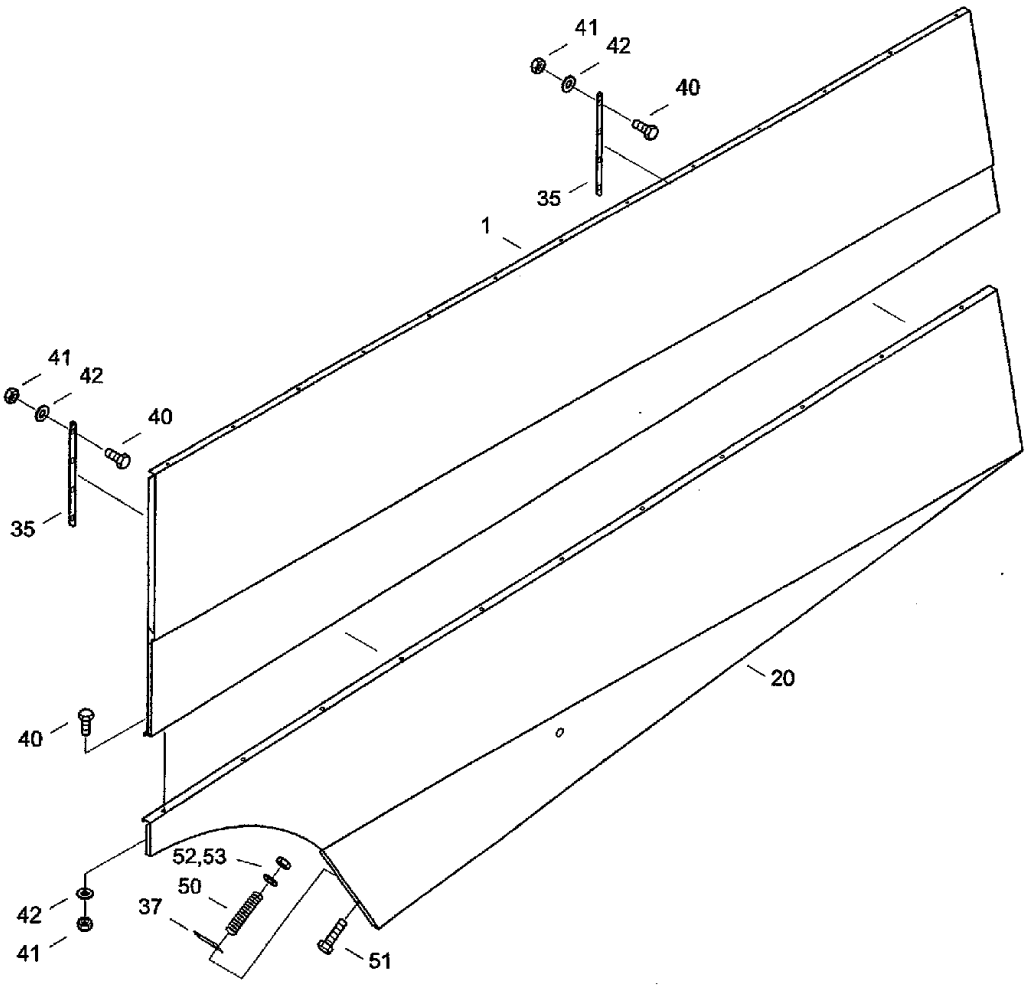

E050

CF80 CASE IH CROSS FLOW COMBINE

E060 RUNNING GEAR- SIDE FLAP

Ref	Part Number	Qty	Description
1	31305800	1	FLAP, Upper part
20	31303936	1	FLAP, Bottom
35	31307667	4	ANGLE BAR, Angle
37	31293483	1	SHIN, Strap
40	614-8018	27	SCREW, Hex, M8 x 18, 8.8, Full Thd, Hex bolt M8x18ISO40178.8
41	825-1408	27	NUT, M8, Cl 8,
42	06577028	27	WASHER, SPECIAL, Locking washer M8
50	006704052	1	SPRING, COMPRESSION, Pressure spring A1, 1x12x5,5
51	614-6030	1	BOLT, Hex, M6 x 30, 8.8, Full Thd, Hex bolt M6x30 ISO4017 8.8
52	832-10406	1	NUT, M6 x 1, Cl 8, Hex nut M6 DIN982 8
53	06577036	1	WASHER, SPECIAL, Locking washer M6

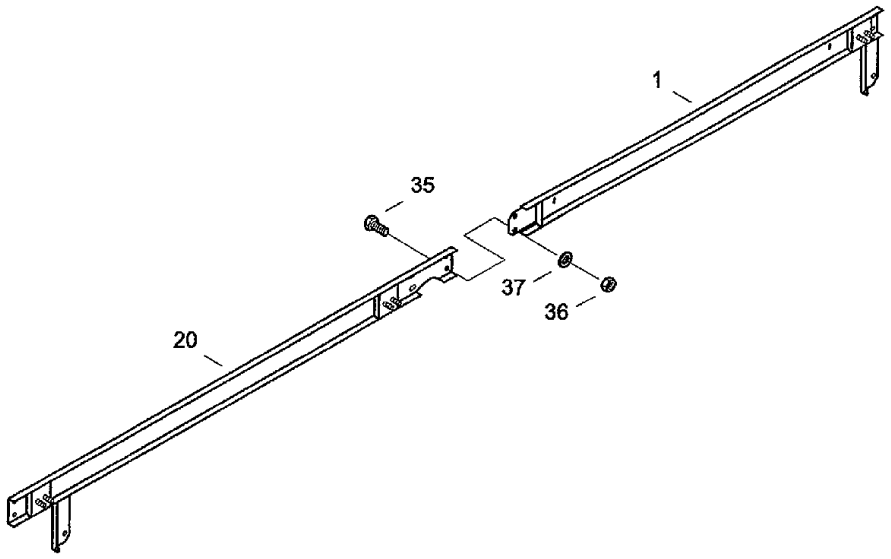

◀E050

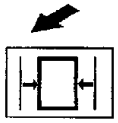

CF80 CASE IH CROSS FLOW COMBINE

E070 RUNNING GEAR- SUPPORT

Ref	Part Number	Qty	Description
1	31289028	1	SUPPORT, Carrier component
20	31289036	1	SUPPORT, Carrier component
35	614-10025	2	BOLT, Hex, M10 x 25, 8.8, Full Thd, Hex bolt Ml 0x25 ISO4017 8.8
36	825-1410	2	NUT, M10, Cl 8,
37	06577003	2	WASHER, SPECIAL, Locking washer M10

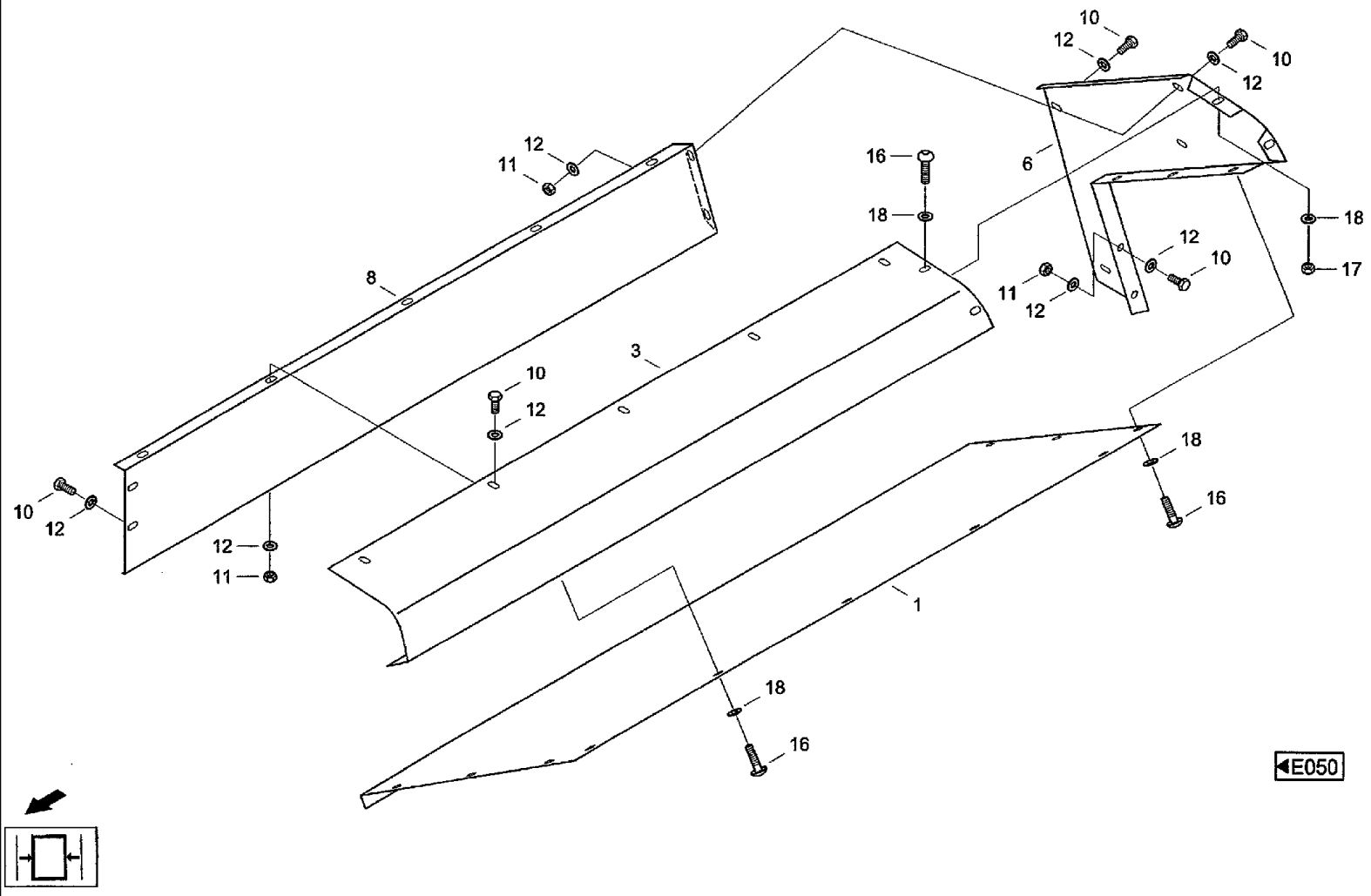
10
12
10
12
12
11
16
6
18
18
12
10
11
12
17
8
3
10
12
10
12
18
16
12
11
1
18
16
E050

CF80 CASE IH CROSS FLOW COMBINE

E080 RUNNING GEAR- ENGINE PANELLING

Ref	Part Number	Qty	Description
1	061079536	1	COVER, PROTECTIVE, Panel
3	31301042	1	PANEL, Cover plate
6	061079511	1	PANEL, Rear wall
8	31301050	1	PROTECTION PLATE, Side panel
10	614-8020	13	BOLT, Hex, M8 x 20, 8.8, Hex bolt M8x20 ISO4017 8.8
11	825-1408	13	NUT, M8, Cl 8,
12	06577044	22	WASHER, SPECIAL, Locking washer B8
16	060512216	13	SCREW, Flat-round-head screw M6x16-A3C CN 20 0152 BENR. 636
17	825-1406	2	NUT, M6, Cl 8,
18	06577124	13	WASHER, Locking washer B6

E090 RUNNING GEAR- STEERING AXLE, VARIOUS COMPONENTS

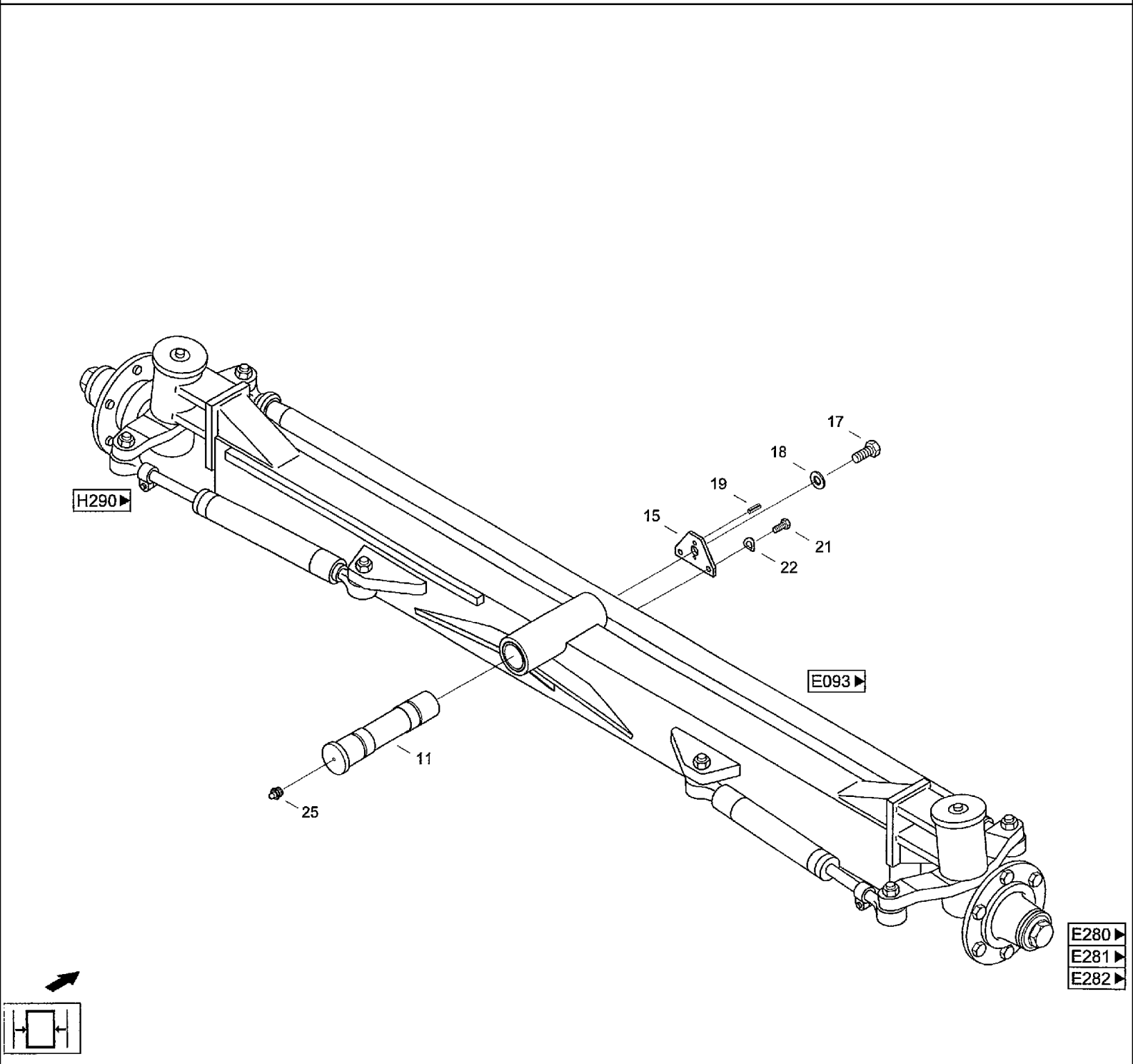

CF80 CASE IH CROSS FLOW COMBINE

E090 RUNNING GEAR- STEERING AXLE, VARIOUS COMPONENTS

Ref	Part Number	Qty	Description
11	061031843	1	STUD, Steered axle bolt e019г-00.00.001 (527-40300:011/03) шайба
15	061031851	1	PLATE, LOCKING, Lock plate 527-40300:015/04 пластина
17	006379303	1	SCREW, Hex bolt M20x1 ,5x451808676 8.8
18	06461402	1	WASHER, Washer 21 DIN432 ST
19	060160844	1	PIN, Notched dowel 10X20-STDIN1473
21	614-10025	2	BOLT, Hex, M10 x 25, 8.8, Full Thd, Hex bolt M10x25 ISO4017 8.8
22	06501428	2	WASHER, SPRING, Wave washer spring B10 DIN137 FST
25	03617056	1	NIPPLE, LUBE, Grease nippel AM8x1 DIN71412

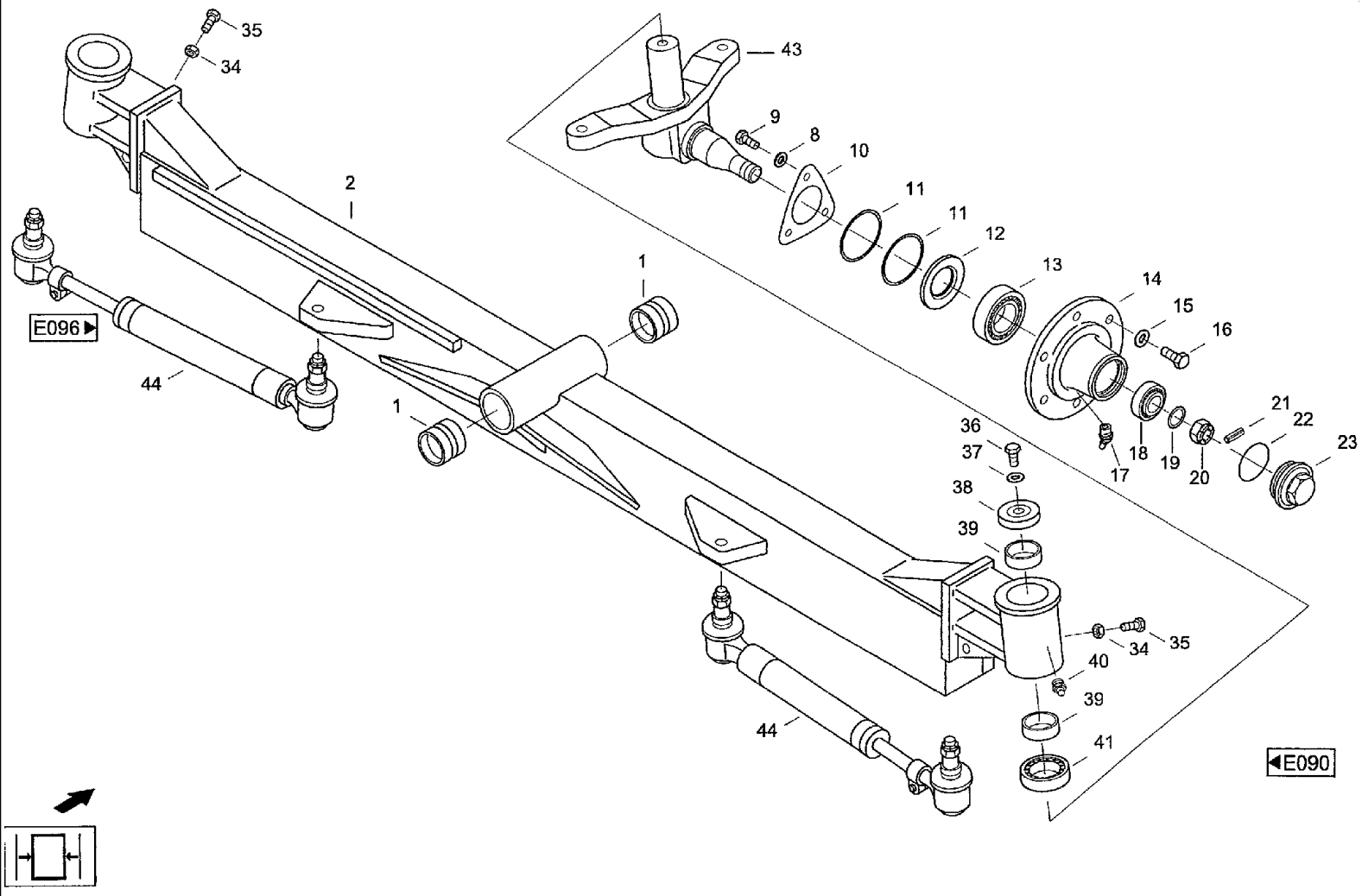
35
34
43
9
8
10
2
11
11
12
13
14
15
16
1
E096
44
1
36
37
38
39
17
18
19
20
21
22
23
35
34
40
39
44
41
E090

CF80 CASE IH CROSS FLOW COMBINE

E093(01) RUNNING GEAR- STEERING AXLE

Ref	Part Number	Qty	Description
1	061024748	2	BUSHING, Sleeve
2	260459N0	1	AXLE, STEERING, Steering axle body
8	236481N1	3	BACK-UP RING, Locking ring VSMZ8
9	864-8020	3	SCREW, Hex Soc Hd, M8 x 20, 8.8, Cheese-head screw M8x20DIN9128.8
10	260767N0	1	COVER, Revolving field
11	216016N0	2	KIT, GASKET, Lamination ring SATZ
12	669791N0	2	SUPPORT, Lamella support
13	03670960	2	BEARING, BALL, Taper roller bearing 33212 DIN720
14	669419N1	1	HUB, Wheel hub r
15	006456630	12	WASHER, LOCK, Spring washer C18.5DIN74361
16	06379625	12	SCREW, Hex bolt M1 8x1, 5x35 ISO8676 8.8
17	03640746	2	NIPPLE, LUBE, Grease nippel BM8x1 DIN71412
18	215776N0	2	BEARING, ROLLER, Taper roller bearing 33207 DIN720
19	233820N0	2	WASHER, Shim
20	211053N1	2	NUT, Castllated nut M33x1,5DIN937
21	235667N2	2	SPLIT PIN/SAFETY PIN, Roll pin 6x45B DIN8752
22	211442N0	2	O-RING, O-ring 76x2-N DIN3771
23	260501N0	2	CAP, Threaded cap
24	669417N2	1	TIE ROD, Track rod k
25	669899N0	1	BALL JOINT, Ball joint
26	669911N0	2	CLAMP, Cpl. clamp
27	669903N0	1	SPACER, Intermediate pipe
28	060159545	2	SCREW, Hex bolt M 12x1 ,5x70180867610.9
29	97019655	2	NUT, Hex nut M12x1,5DIN9808
30	694264N0	1	BALL JOINT, Ball joint

E093(02) RUNNING GEAR- STEERING AXLE

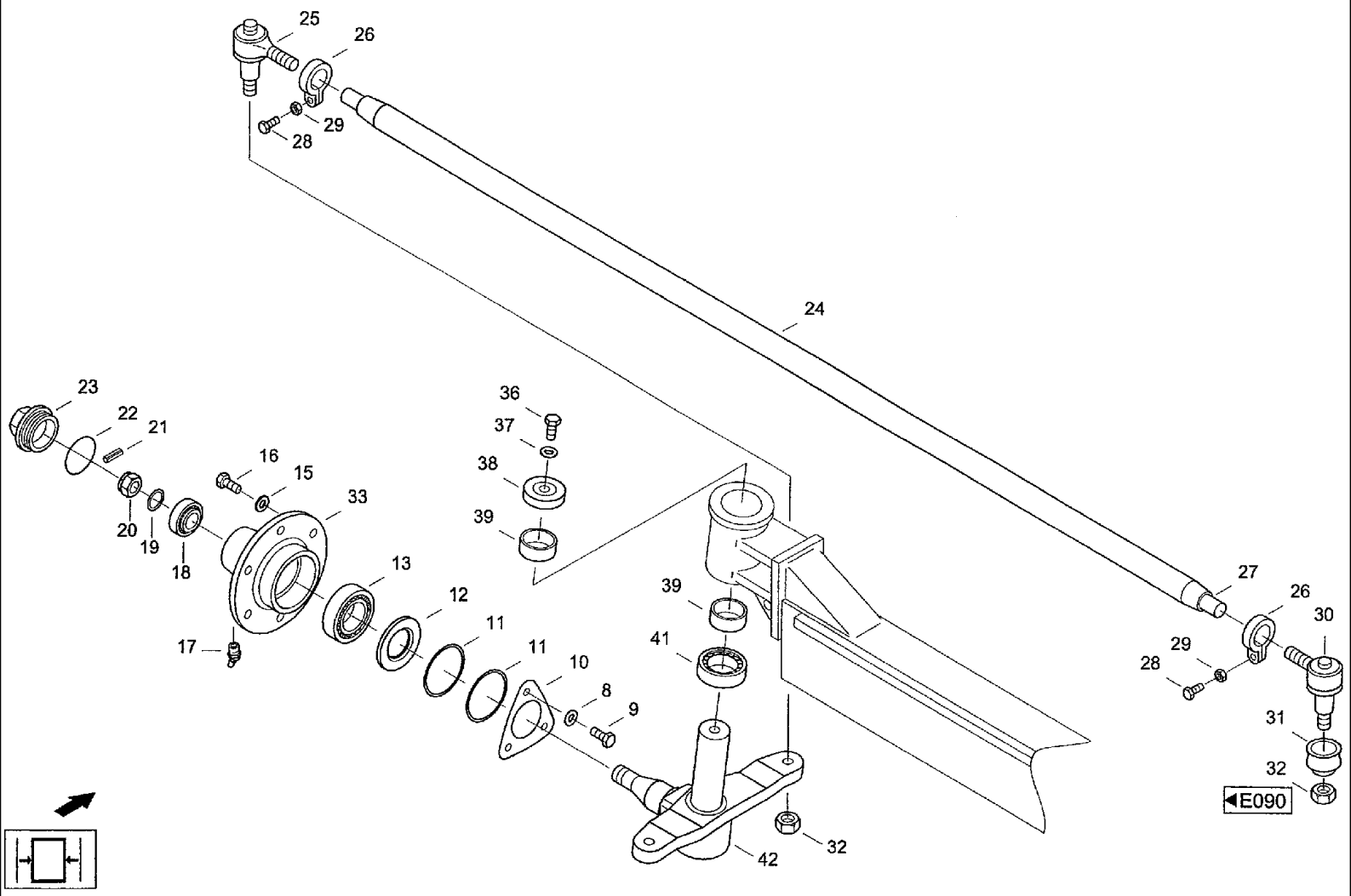

CF80 CASE IH CROSS FLOW COMBINE

E093(02) RUNNING GEAR- STEERING AXLE

Ref	Part Number	Qty	Description
31	669912N0	1	SEAL, OIL, Sealing bellows
32	06267298	2	NUT, Hex nut M20x1,5DIN69256
33	260457N0	1	HUB, Wheel hub l
34	06242064	2	NUT, Hex nut M16DIN69258
35	614-16050	2	BOLT, Hex, M16 x 50, 8.8,
36	614-12020	2	BOLT, Hex, M12 x 20, 8.8, Full Thd, Hex bolt M12x20ISO40178.8
37	235134N1	2	WASHER, LOCK, Spring washer 12
38	669525N1	2	COVER, Shroud plate
39	669487N0	4	BUSHING, Sleeve
40	03617056	4	NIPPLE, LUBE, Grease nippel AM8x1 DIN71412
41	215942N0	2	BEARING, ROLLER, Cylindrical roller bearing 81112TN
42	260489N1	1	PIN, AXLE, Control arm l
43	260478N0	1	PIN, AXLE, Control arm r
44	084783N0	2	CYLINDER STEERING, Hydraulic cylinder k

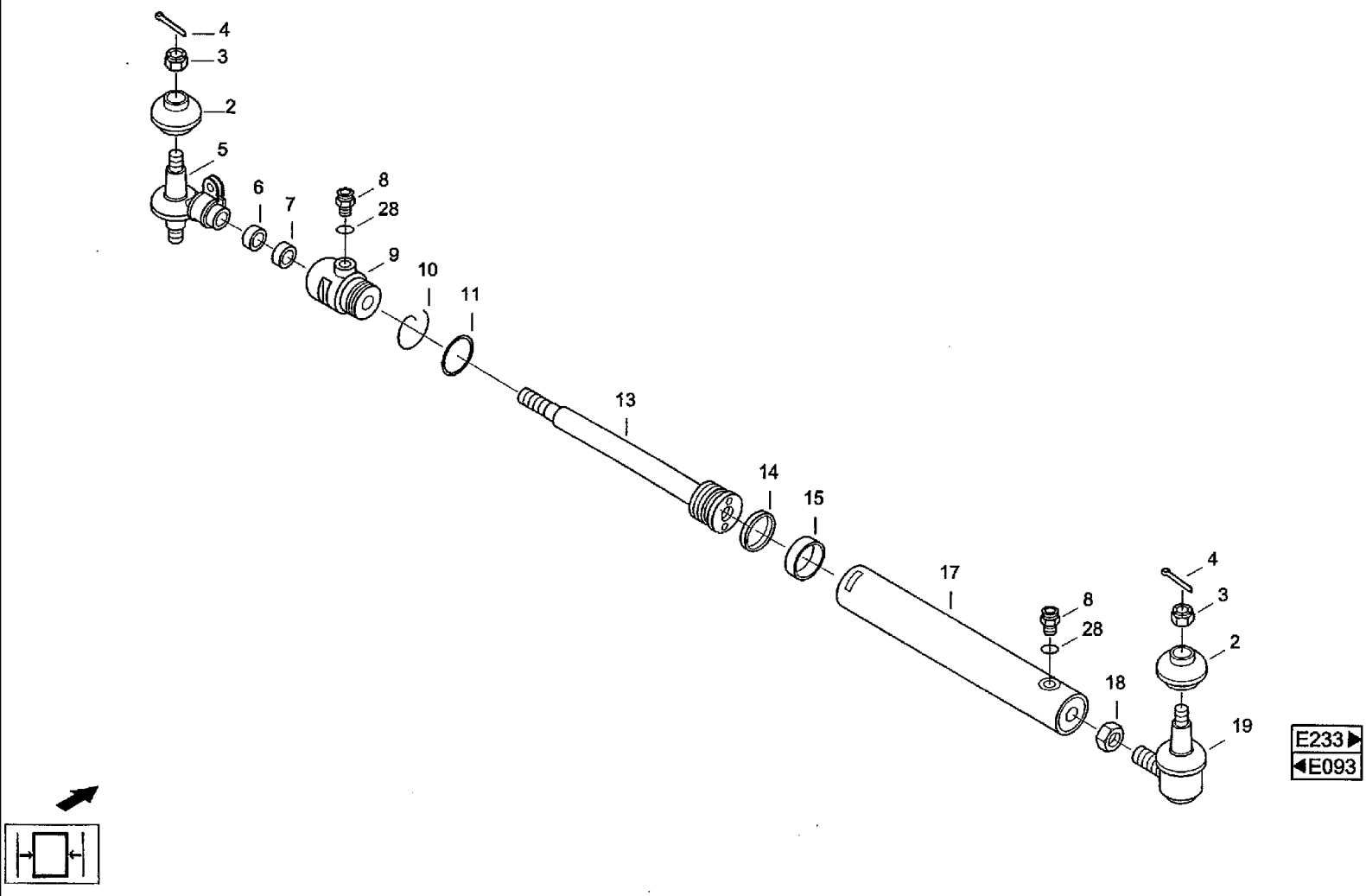
4
3
2
5
6
7
8
28
9
10
11
13
14
15
17
8
28
4
3
2
18
19
E233
E093

CF80 CASE IH CROSS FLOW COMBINE

E096 RUNNING GEAR- HYDRAULIC CYLINDER

Ref	Part Number	Qty	Description
2	074303N0	8	BELLOWS, Sealing bellows
3	97017046	8	NUT, Castllated nut M20x1,5DIN9378
4	733-4036	8	PIN, SPLIT (COTTER), M4 x 36, Splint pin 4x36 DIN94 ST
5	668998N0	4	BALL JOINT, Ball joint
6	239008N0	4	SCRAPER, Mud scraper
7	239009N0	4	SEAL, SHAFT, Lip seal
8	215917N0	8	FITTING, Male connectorL10F-M
9	668996N1	4	CYLINDER HEAD, Cylinder head
10	683259N1	4	WIRE, Securing wire 3,20x156
11	218117N0	4	RING, Back-up ring 46x51,5x1,5
13	087266N0	4	ROD, PISTON, Connecting rod
14	213220N0	4	GASKET, Piston seal 50x39x4
15	213027N0	4	GUIDE, Connecting rod guide ring
17	086380N0	4	SLEEVE, HYD' CYL', Cylinder tube
18	97016259	4	NUT, Hex nut M24x1,5DIN9368
19	668997N0	4	BALL JOINT, Ball joint
28	215838N0	8	O-RING, O-ring

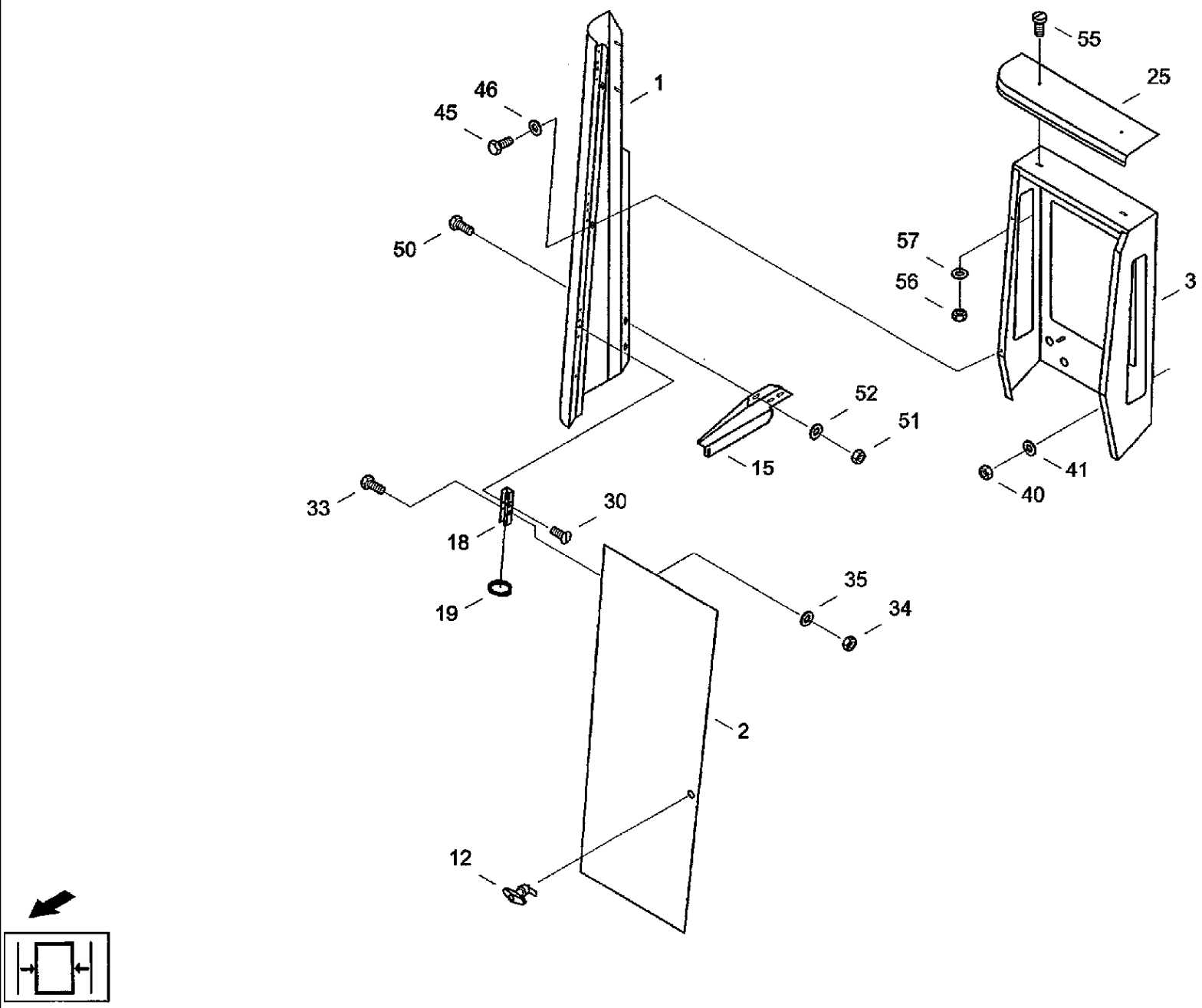
55
25
46
1
45
50
57
56
3
52
51
15
41
40
33
30
18
19
35
34
2
12

CF80 CASE IH CROSS FLOW COMBINE

E100 RUNNING GEAR- TRIM, FRONT, RIGHT

Ref	Part Number	Qty	Description	
1	31291440	1	WALL, Side panel r	e010-10.00.001 облицовка
2	061079431	1	SHEET, Door r	e010-20.00.000 дверь пр.
3	31291096	1	WALL, Intermediate panel	e010-10.00.000 ящик
12	01321984	1	GRIP, T-handle BEST.AUS 200-9307 200-0620 U.2	e01-40.00.000 рукоятка
15	31291465	1	SUPPORT, Support	e010-00.00.002-01 крепление
18	06440873	3	HINGE, Hinge	
19	06440881	3	CIRCLIP, Snap ring	
25	01416484	1	CAP, Cap r	e010-00.00.001 колпак
30	006072938	6	SCREW, Countersunk screw M6x12 DIN963 5.8	
33	614-6012	6	BOLT, Hex, M6 x 12, 8.8, Hex bolt M6x12ISO40178.8	
34	825-1406	6	NUT, M6, Cl 8,	
35	06577124	6	WASHER, Locking washer B6	
40	825-1408	6	NUT, M8, Cl 8,	
41	06577044	6	WASHER, SPECIAL, Locking washer B8	
45	614-8016	2	BOLT, Hex, M8 x 16, 8.8,	
46	06577044	2	WASHER, SPECIAL, Locking washer B8	
50	614-8020	4	BOLT, Hex, M8 x 20, 8.8, Hex bolt M8x20 ISO4017 8.8	
51	825-1408	4	NUT, M8, Cl 8,	
52	06577044	8	WASHER, SPECIAL, Locking washer B8	
55	06085083	2	SCREW, Fillister head screw M8x20 ISO7380 8.8	
56	825-1408	2	NUT, M8, Cl 8,	
57	06577044	2	WASHER, SPECIAL, Locking washer B8	

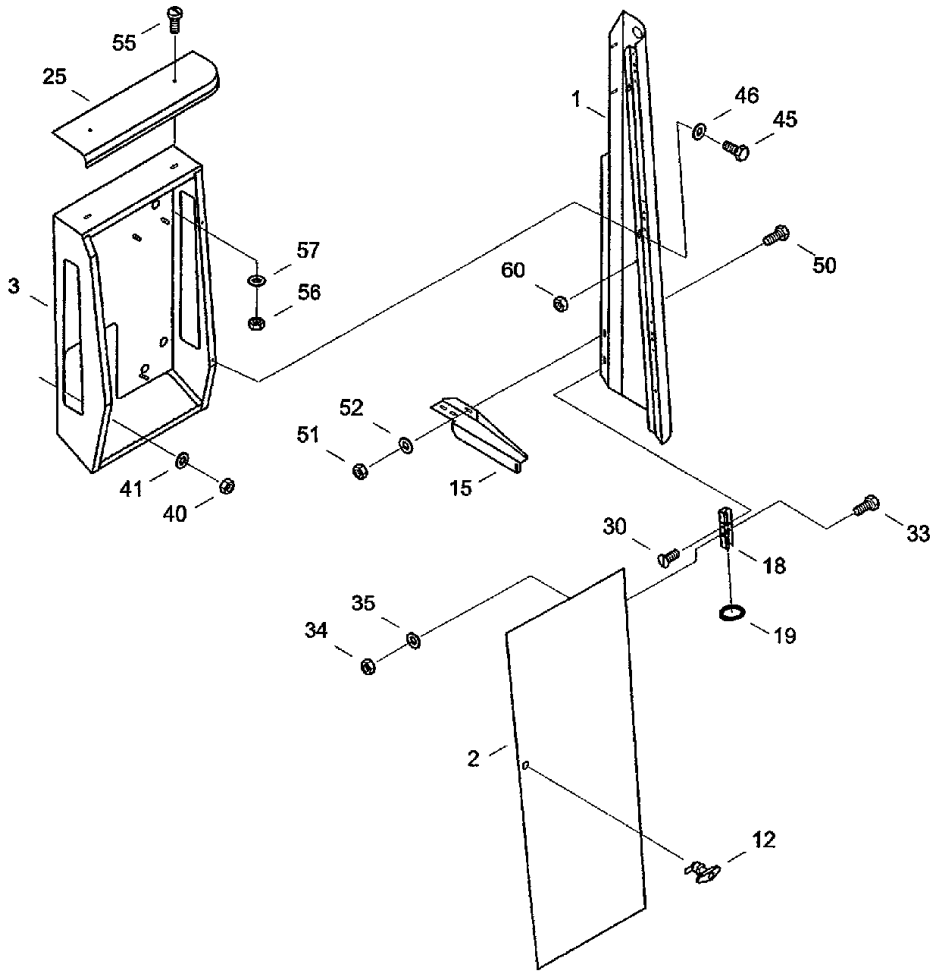
55
25
3
57
56
41
40
1
46
45
50
60
52
51
15
30
33
18
19
35
34
2
12

CF80 CASE IH CROSS FLOW COMBINE

E102 RUNNING GEAR- TRIM, FRONT, LEFT

Ref	Part Number	Qty	Description
1	31291432	1	WALL, Side panel 1 e010-30.10.000 облицовка
2	061079368	1	SHEET, Door 1 e010-20.00.000-01 дверь
3	31291088	1	WALL, Intermediate panel e017-10.00.000 ящик
12	01321984	1	GRIP, T-handle BEST.AUS 200-9307 200-0620 U.2 e010-40.00.000 рукоятка
15	31291457	1	SUPPORT, Support e010-00.00.002 крепление
18	06440873	3	HINGE, Hinge
19	06440881	3	CIRCLIP, Snap ring
25	01416476	1	CAP, Cap 1 e01-00.00.001-01 колпак
30	006072938	6	SCREW, Countersunk screw M6X12DIN9635.8
33	614-6012	6	BOLT, Hex, M6 x 12, 8.8, Hex bolt M6x12ISO40178.8
34	825-1406	6	NUT, M6, Cl 8,
35	06577124	6	WASHER, Locking washer B6
40	825-1408	6	NUT, M8, Cl 8,
41	06577044	6	WASHER, SPECIAL, Locking washer B8
45	614-8016	2	BOLT, Hex, M8 x 16, 8.8,
46	06577044	2	WASHER, SPECIAL, Locking washer B8
50	614-8020	4	BOLT, Hex, M8 x 20, 8.8, Hex bolt M8x20IS040178.8
51	825-1408	4	NUT, M8, Cl 8,
52	06577044	8	WASHER, SPECIAL, Locking washer B8
55	06085083	2	SCREW, Fillister head screw M8x20 ISO7380 8.8
56	825-1408	2	NUT, M8, Cl 8,
57	06577044	2	WASHER, SPECIAL, Locking washer B8
60	825-1406	2	NUT, M6, Cl 8,
61		1	кронштейн e017-30.00.001

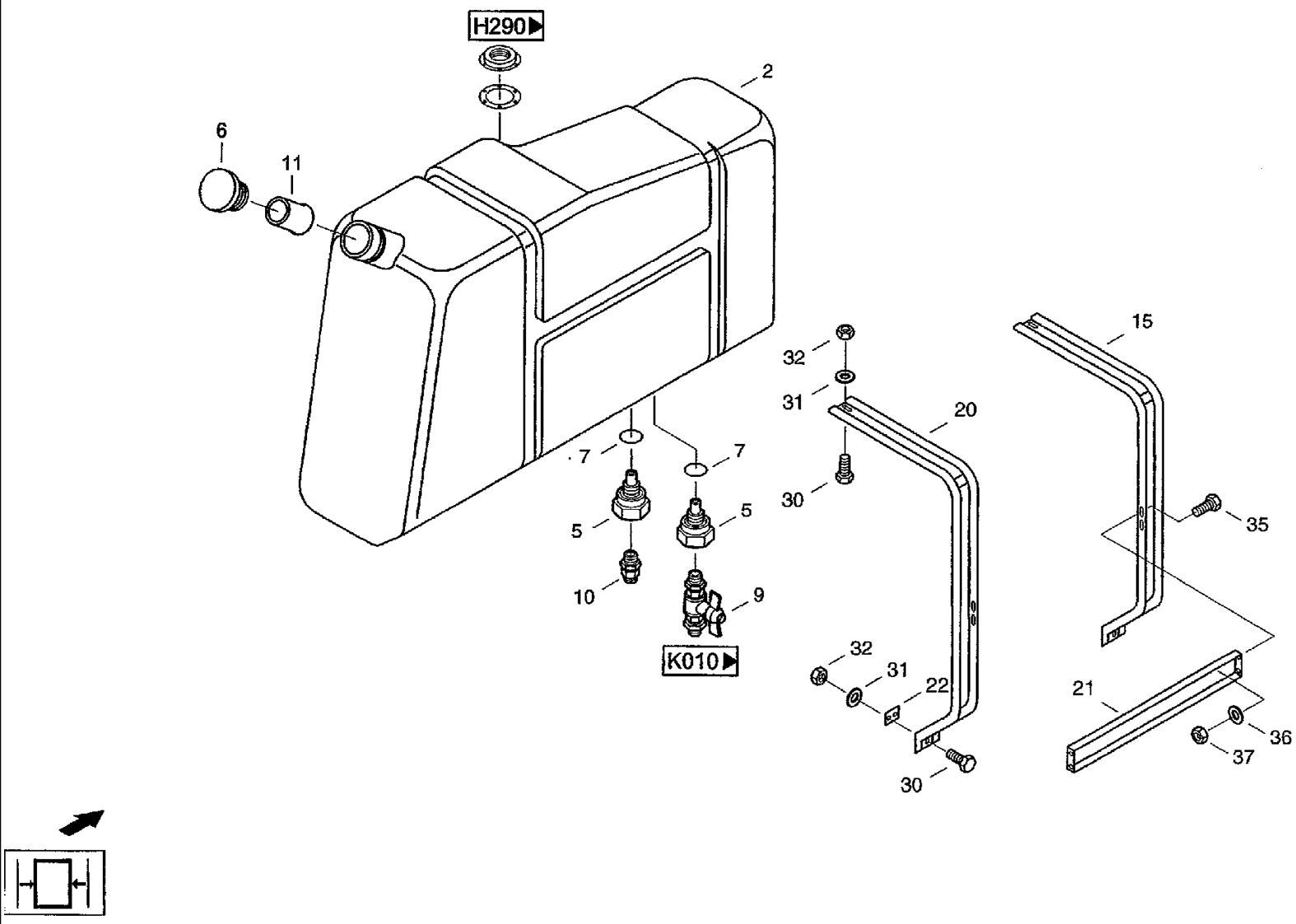
H290
2
6
11
7
7
5
5
10
9
K010
32
31
20
30
15
35
32
31
22
21
36
37
30

CF80 CASE IH CROSS FLOW COMBINE

E110 RUNNING GEAR- FUEL TANK

Ref	Part Number	Qty	Description	
2	072018868		CONTAINER, Box	
5	061028390		FITTING, Socket	
9	061052727		VALVE, SHUT-OFF, Valve	
15	31312094		BOW, Bracket	e011-00.00.002 скоба
20	31312100		BOW, Bracket	e011-00.00.001 скоба
21	061028421		LINK DRAG, Connection	527-50400:021/03 соединение
22	061028495		BLOCK, Shim	527-50400:022/04 прокладка
31	06577003	M10	WASHER, SPECIAL, Locking washer	
36	06577036	i. M6	WASHER, SPECIAL, Locking washer	

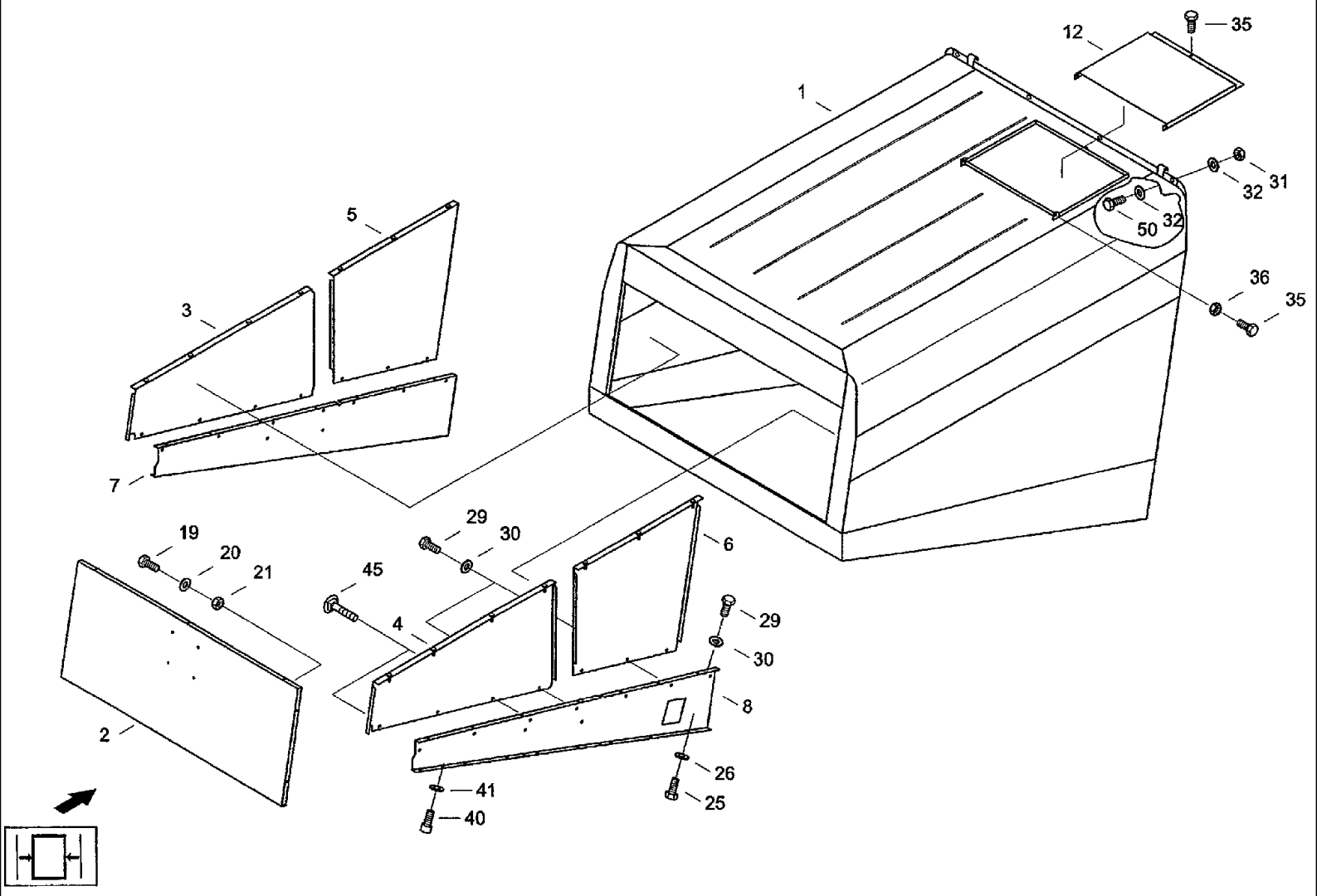
12
35
1
31
32
32
50
36
35
5
3
7
19
20
21
29
30
45
4
6
29
30
8
2
26
25
41
40

CF80 CASE IH CROSS FLOW COMBINE

E133 RUNNING GEAR- UNLOADER TUBE SPOUT

Ref	Part Number	Qty	Description	
1	061072997	1	COWL, Sheet metal cover	e013м-01.00.000 колпак
2	061073040	1	FLAP, Rear wall	e013м-02.00.000 задняя стенка
3	061073081	1	PLATE, Trim Links	e013м-03.00.000 обшивка
4	061073098	1	PLATE, Trim Rechts	e013м-03.00.000-01 обшивка
5	31290351	1	PROTECTION PLATE, Cover plate l	e013м-04.00.000 покровный лист
6	31290376	1	PROTECTION PLATE, Cover plate r	e013м-04.00.000-01 покровный лист
7	31290392	1	PROTECTION PLATE, Profiled sheet metal l	e013м-05.00.000 профильный щиток
8	31290423	1	PROTECTION PLATE, Profiled sheet metal r	e013м-05.00.000-01 профильный щиток
12	31338987	1	COVER, Cap	e013м-00.00.001 крыша
19	614-8016	7	BOLT, Hex, M8 x 16, 8.8,	
20	06577044	7	WASHER, SPECIAL, Locking washer B8	
21	825-1408	7	NUT, M8, Cl 8,	
25	614-10025	6	BOLT, Hex, M10 x 25, 8.8, Full Thd, Hex bolt M10x25 ISO4017 8.8	
26	06577052	6	WASHER, SPECIAL, Locking washer B10	
29	614-8020	26	BOLT, Hex, M8 x 20, 8.8, Hex bolt M8x20 ISO4017 8.8	
30	06577044	28	WASHER, SPECIAL, Locking washer B8	
31	825-1410	15	NUT, M10, Cl 8,	
32	06577052	30	WASHER, SPECIAL, Locking washer B10	
35	614-6018	3	BOLT, Hex, M6 x 18, 8.8, Full Thd, Hex bolt M6x18IS040178.8	
36	832-10406	2	NUT, M6 x 1, Cl 8, Hex nut M6 DIN982 8	
40	864-10025	16	SCREW, Hex Soc Hd, M10 x 25, 8.8, Cheese-head screw M10x25 DIN912 8.8	
41	97022011	16	SNAP RING, Locking ring VSK10DIN	
45	98046526	2	SCREW, Flat-round-head screw N.ZCHNG.04-124596	
50	614-10025	15	BOLT, Hex, M10 x 25, 8.8, Full Thd, Hex bolt M10X25ISO40178.8	

E140(01) RUNNING GEAR- TRIM, RIGHT

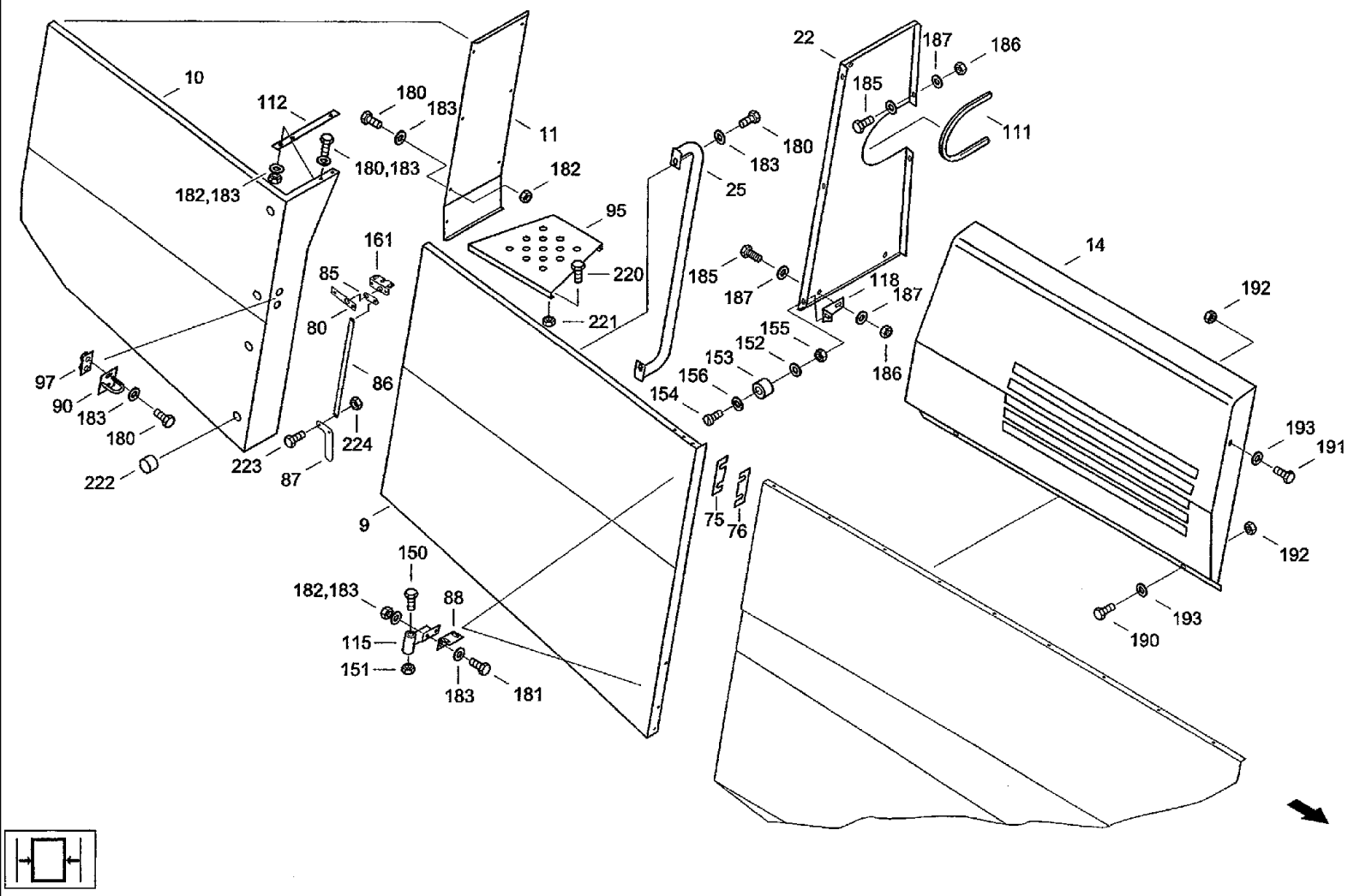

CF80 CASE IH CROSS FLOW COMBINE

E140(01) RUNNING GEAR- TRIM, RIGHT

Ref	Part Number	Qty	Description
5	31292546	1	PROTECTION PLATE, Guard
9	31305698	1	FLAP, Door
10	31297776	1	SHEET, Side panel
11	31305608	1	WALL, Rear wall
14	061079101	1	WALL, Radiator casing
22	061078994	1	WALL, Rear wall r
25	31310252	1	GRAB RAIL, Handrail
75	31318372	2	PLATE, Plate
76	31318380	1	PLATE, Plate
80	31311132	1	PLATE, SPACER, Reinforcing bar
85	31310228	1	SUPPORT, Strap
86	31310236	1	PLATE, SPACER, Rail
87	31310244	1	LEVER, Lever
88	31311124	1	ANGLE, Angle
90	31310197	1	LATCH, Bracket
95	31310285	1	STEP, Step
97	31318356	1	PLATE, Reinforcing bar
100	061066355	3	HINGE, Hinge
106	061073194	1	ANGLE BAR, Angle
109	061079118	1	HOLDER, Support
110	31293475	1	ANGLE BAR, Angle
111	31304447	1	LINING, Edge protection element A1 018 FIXLANGE 610 +/- 1MM
112	31307730	1	SUPPORT, Strap
115	31305712	2	SUPPORT, Support
118	31318284	1	ANGLE, Angle

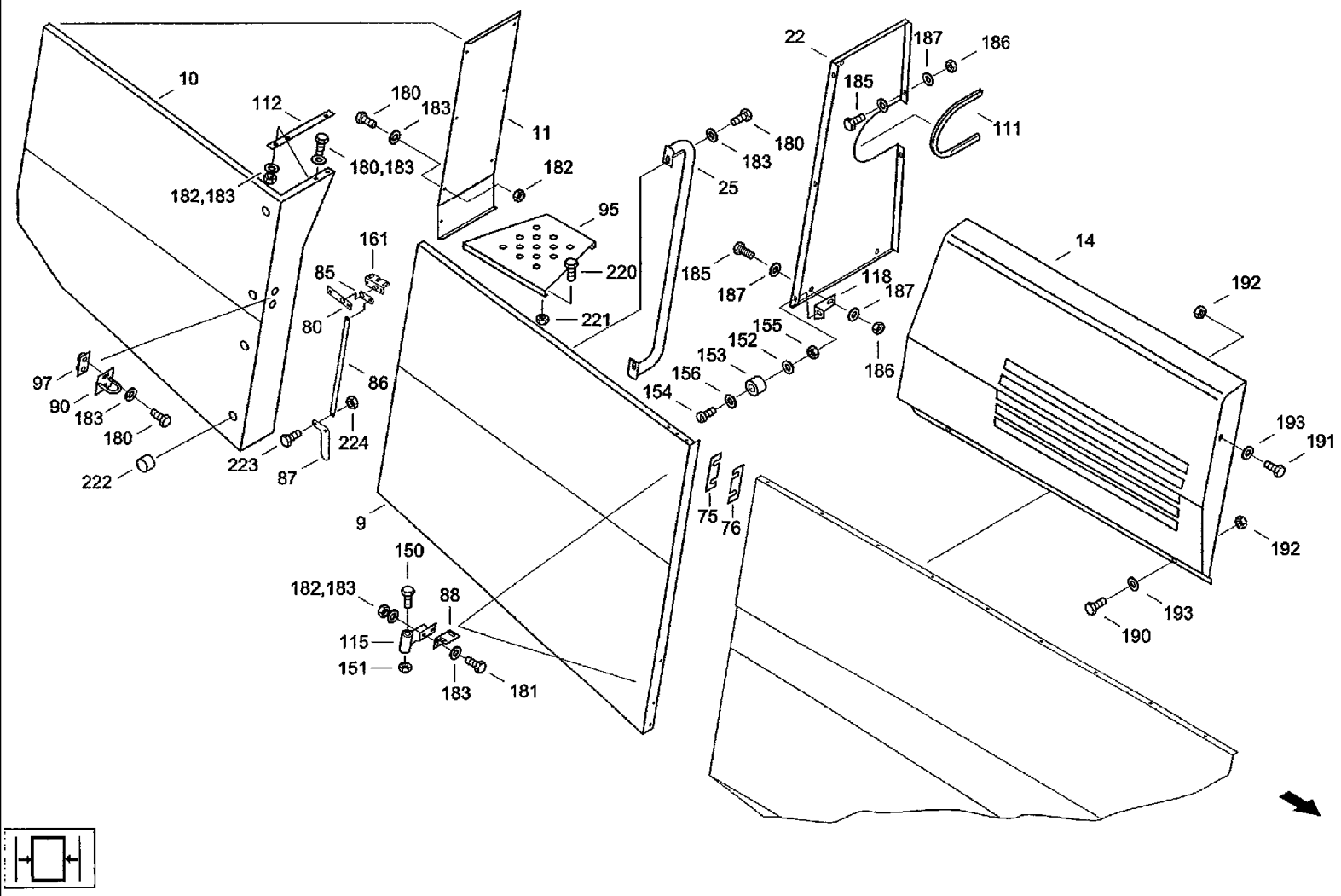
10
112
180
183
180,183
182,183
11
182
95
220
221
161
85
80
86
97
90
183
180
222
223
87
224
9
150
182,183
88
115
151
183
181
25
180
183
185
187
22
187
186
185
111
118
187
186
155
152
153
156
154
14
192
193
191
192
193
190
75
76

CF80 CASE IH CROSS FLOW COMBINE

E140(02) RUNNING GEAR- TRIM, RIGHT

Ref	Part Number	Qty	Description
120	060184257	1	SUPPORT, Bracket
150	814-10080	5	BOLT, Hex, M10 x 80, 8.8,
151	832-10410	5	NUT, LOCK, M10 x 1.5, Cl 8,
152	895-11006	2	WASHER, M6, Washer 6.4DIN125ST
153	01139752	2	BUFFER, RUBBER, Rubber stop FUSS25FORM1821
154	06004285	2	SCREW, Cheese-head screw M6x25 DIN84 4.8
155	825-1406	2	NUT, M6, Cl 8,
156	06577036	2	WASHER, SPECIAL, Locking washer M6
157	060533993	2	CYLINDER, GAS, Gas pressure spring G14 28 0250 1 0650 GA 40 BA16
158	614-8040	4	BOLT, Hex, M8 x 40, 8.8, Full Thd, Hex, M8 x 40, 8.8, Full Thd
159	825-1408	2	NUT, M8, Cl 8,
160	832-10408	4	NUT, M8 x 1.25, Cl 8, Hex nut M8 DIN982 8
161	060508830	2	LOCK ASSY, Tailgate lock
162	614-8020	4	BOLT, Hex, M8 x 20, 8.8, Hex bolt M8X20ISO40178.8
163	825-1408	2	NUT, M8, Cl 8,
164	06577044	4	WASHER, SPECIAL, Locking washer B8
166	825-1410	6	NUT, M10, Cl 8,
167	06577003	6	WASHER, SPECIAL, Locking washer M10
175	614-10025	9	BOLT, Hex, M10 x 25, 8.8, Full Thd, Hex bolt M1 0x25180401 7 8.8
176	825-1410	9	NUT, M10, Cl 8,
177	06577003	13	WASHER, SPECIAL, Locking washer M10
180	614-8016	16	BOLT, Hex, M8 x 16, 8.8,
181	614-8025	6	BOLT, Hex, M8 x 25, 8.8,
182	825-1408	20	NUT, M8, Cl 8,
183	06577028	26	WASHER, SPECIAL, Locking washer M8

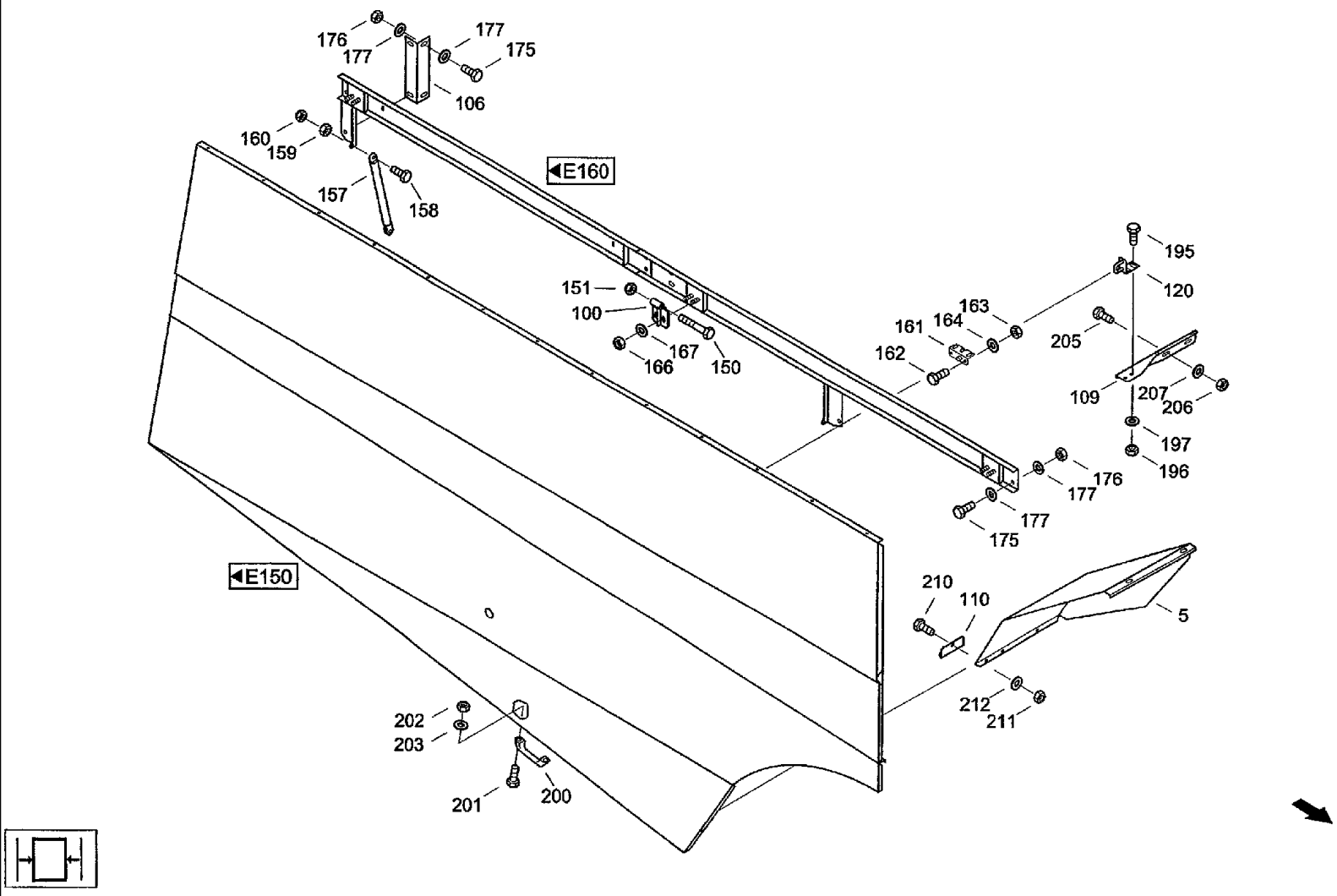
176
177
177
175
106
160
159
157
158
E160
151
100
167
166
150
195
120
163
161
164
162
205
109
207
206
197
196
176
177
177
175
E150
210
110
5
212
211
202
203
201
200

CF80 CASE IH CROSS FLOW COMBINE

E140(03) RUNNING GEAR- TRIM, RIGHT

Ref	Part Number	Qty	Description
185	614-8016	5	BOLT, Hex, M8 x 16, 8.8,
186	825-1408	5	NUT, M8, Cl 8,
187	06577028	5	WASHER, SPECIAL, Locking washer M8
190	614-8016	2	BOLT, Hex, M8 x 16, 8.8,
191	614-8025	1	BOLT, Hex, M8 x 25, 8.8,
192	825-1408	3	NUT, M8, Cl 8,
193	06577028	8	WASHER, SPECIAL, Locking washer M8
195	614-10025	2	BOLT, Hex, M10 x 25, 8.8, Full Thd, Hex bolt M1 0x25130401 7 8.8
196	825-1410	2	NUT, M10, Cl 8,
197	06577003	4	WASHER, SPECIAL, Locking washer M10
200	060510415	1	HANDLE, Handle HAPPICH- 581 0062
201	614-6016	2	BOLT, Hex, M6 x 16, 8.8,
202	825-1406	2	NUT, M6, Cl 8,
203	06577036	2	WASHER, SPECIAL, Locking washer M6
205	614-8020	2	BOLT, Hex, M8 x 20, 8.8, Hex bolt M8x20 ISO4017 8.8
206	825-1408	2	NUT, M8, Cl 8,
207	06577028	4	WASHER, SPECIAL, Locking washer M8
210	614-8020	4	BOLT, Hex, M8 x 20, 8.8, Hex bolt M8x20 ISO4017 8.8
211	825-1408	4	NUT, M8, Cl 8,
212	06577044	8	WASHER, SPECIAL, Locking washer B8
220	614-6016	2	BOLT, Hex, M6 x 16, 8.8,
221	832-10406	2	NUT, M6 x 1, Cl 8, Hex nut M6DIN9828
222	01162462	5	BUFFER, RUBBER, Rubber stop F1023
223	614-8020	3	BOLT, Hex, M8 x 20, 8.8, Hex bolt M8X20 ISO4017 8.8
224	832-10408	3	NUT, M8 x 1.25, Cl 8, Hex nut M8 DIN982 8

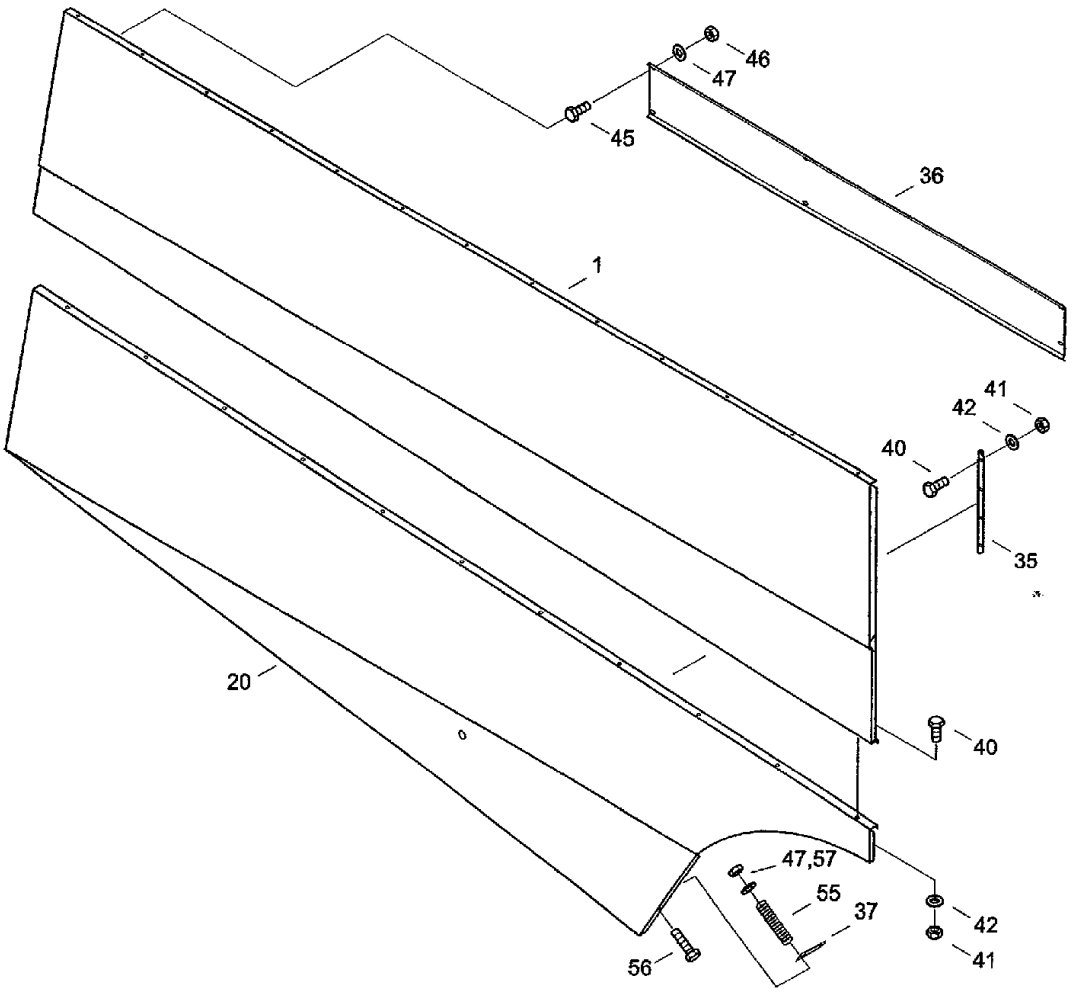

E140

CF80 CASE IH CROSS FLOW COMBINE

E150 RUNNING GEAR- SIDE FLAP

Ref	Part Number	Qty	Description
1	31307626	1	FLAP, Upper part
20	31307650	1	FLAP, Bottom
35	31307667	4	ANGLE BAR, Angle
36	061081844	1	PLATE, Packing plate
37	31293483	1	SHIN, Strap
40	614-8018	27	SCREW, Hex, M8 x 18, 8.8, Full Thd, Hex bolt M8x18ISO40178.8
41	825-1408	27	NUT, M8, Cl 8,
42	06577028	27	WASHER, SPECIAL, Locking washer M8
45	614-6014	6	BOLT, Hex, M6 x 14, 8.8, Full Thd, Hex bolt M6x14IS040178.8
46	825-1406	6	NUT, M6, Cl 8,
47	06577036	7	WASHER, SPECIAL, Locking washer M6
55	006704052	1	SPRING, COMPRESSION, Pressure spring A1, 1x1 2x5,5
56	614-6030	1	BOLT, Hex, M6 x 30, 8.8, Full Thd, Hex bolt M6x30ISO40178.8
57	832-10406	1	NUT, M6 x 1, Cl 8, Hex nut M6 DIN982 8

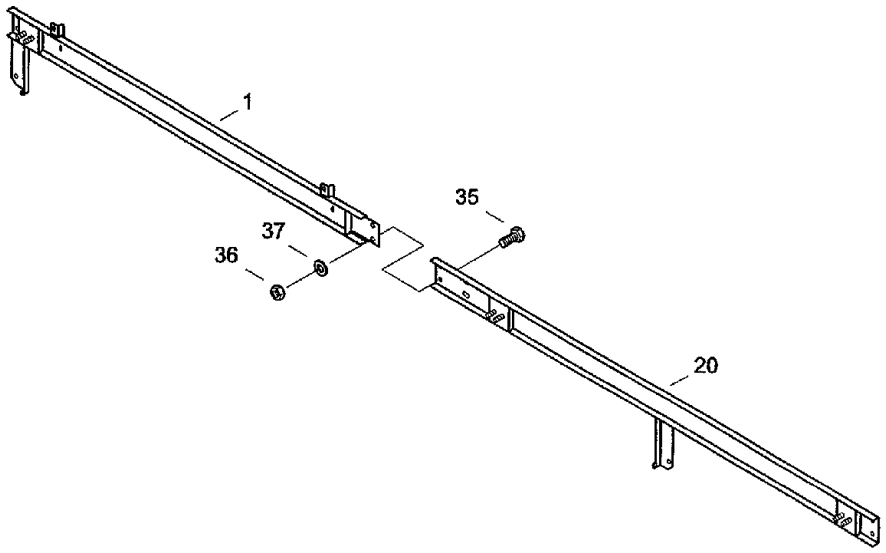

E140

CF80 CASE IH CROSS FLOW COMBINE

E160 RUNNING GEAR- SUPPORT

Ref	Part Number	Qty	Description
1	31288888	1	SUPPORT, Carrier component
20	31288902	1	SUPPORT, Carrier component
35	614-10025	2	BOLT, Hex, M10 x 25, 8.8, Full Thd, Hex bolt M10x25ISO40178.8
36	825-1410	2	NUT, M10, Cl 8,
37	06577003	2	WASHER, SPECIAL, Locking washer M10

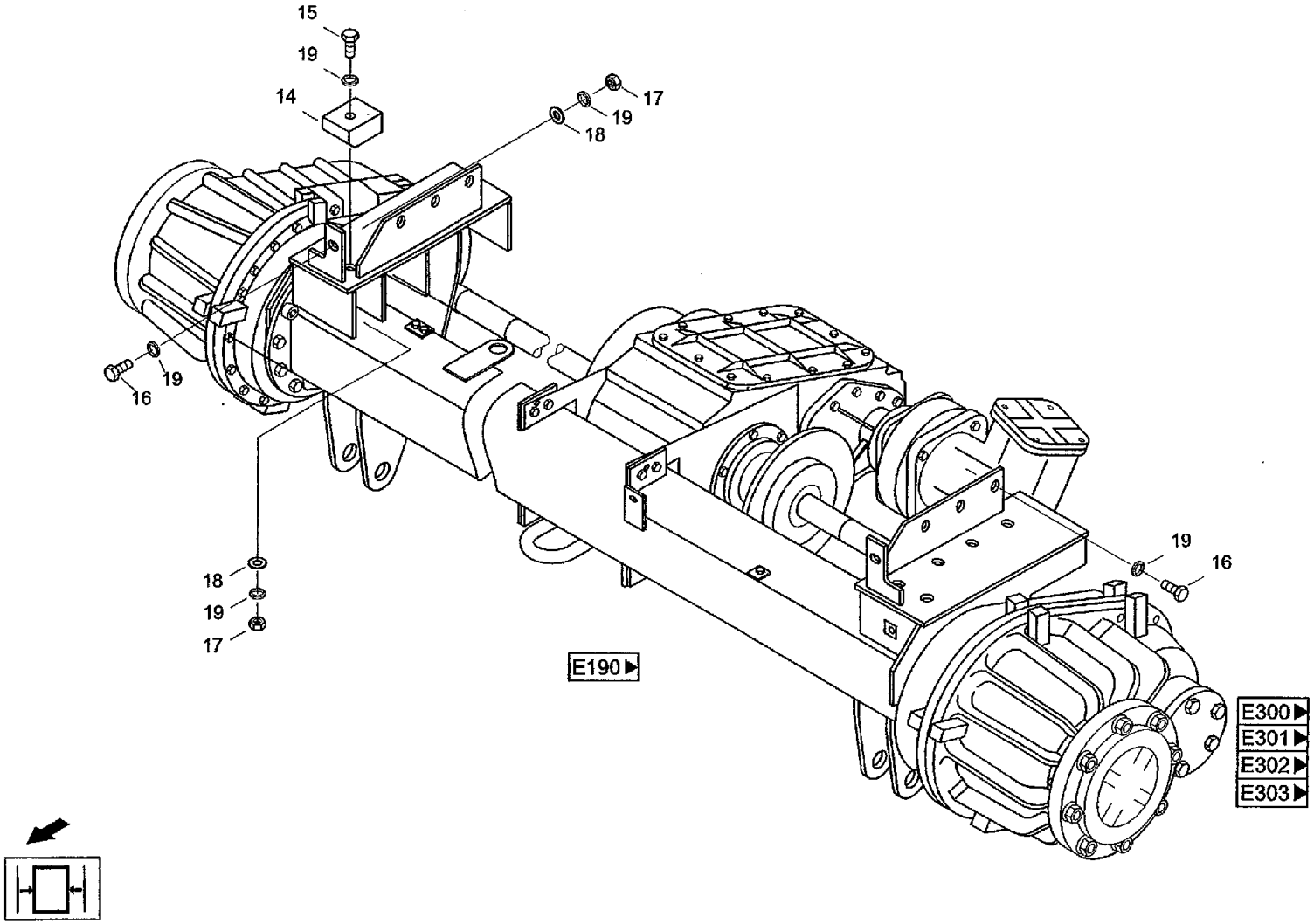
15
19
14
17
19
18
19
16
18
19
17
19
16
E190 ▶
E300 ▶
E301 ▶
E302 ▶
E303 ▶

CF80 CASE IH CROSS FLOW COMBINE

E180 RUNNING GEAR- DRIVING SHAFT, VARIOUS COMPONENTS

Ref	Part Number	Qty	Description
14	31316811	8	BUSHING, Support
15	06373033	8	SCREW, Hex bolt M16x1 ,5x70ISO867610.9
16	06377816	8	SCREW, Hex bolt M1 6x1 ,5x45180867610.9
17	825-11416	16	NUT, M16 x 1.5, Cl 8, Hex nut M16x1,5ISO86738
18	06577093	16	WASHER, LOCK, Locking washer M16
19	06513673	8	WASHER, Washer 17DIN6916

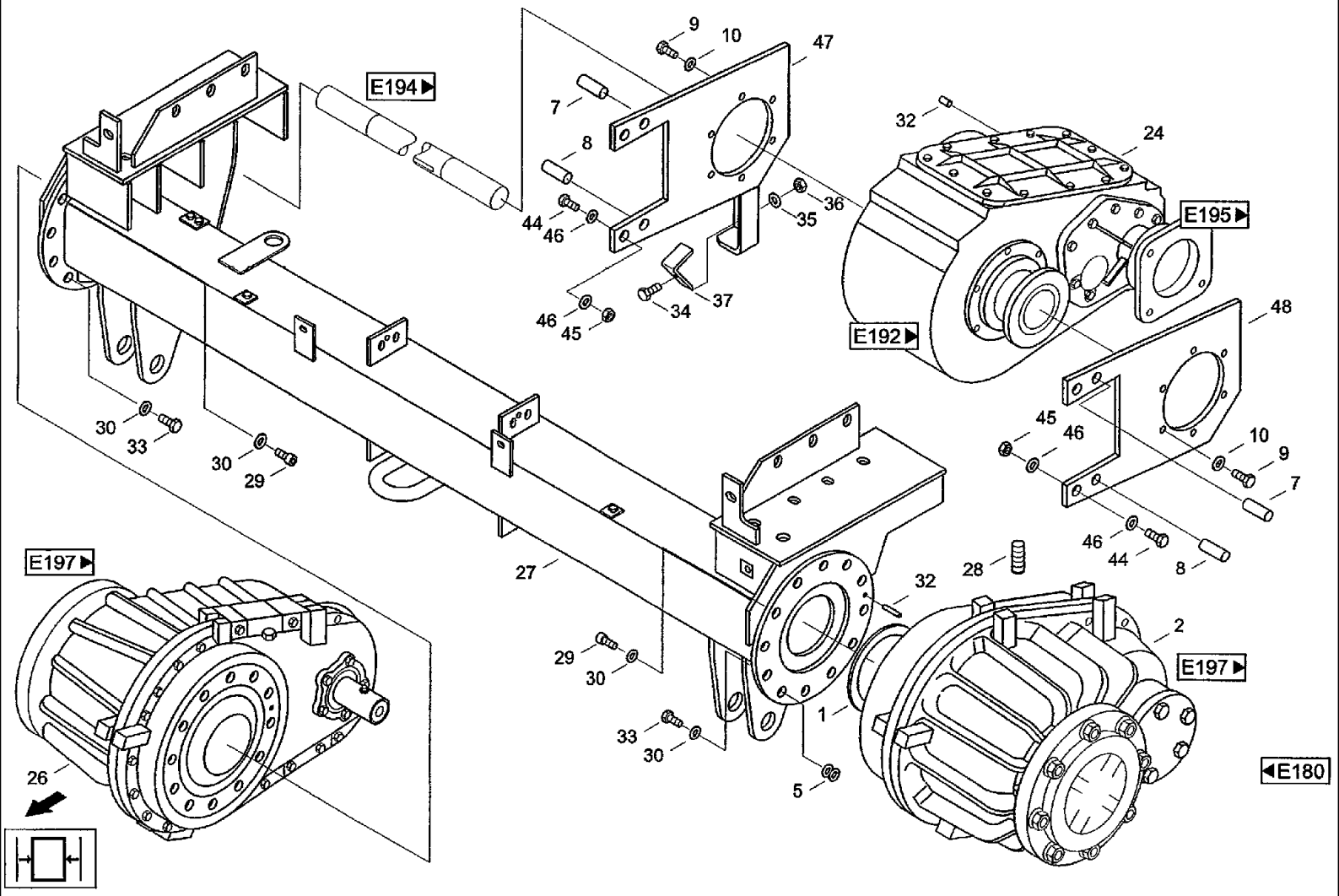
E194
E195
E192
E197
E197
E180
9
10
47
7
8
44
46
36
35
32
24
48
45
46
10
9
7
46
44
8
28
32
2
1
5
30
33
30
29
27
29
30
33
30
26

CF80 CASE IH CROSS FLOW COMBINE

E190 RUNNING GEAR- DRIVING SHAFT

Ref	Part Number	Qty	Description
1	36202244	2	CENTERING RING, Centering ring
2	060513362	1	TRANSMISSION, Final drive l
5	98039644	4	WASHER, Washer
7	060513290	4	SPLIT PIN/SAFETY PIN, Roll pin 12x20
8	060513282	4	SPLIT PIN/SAFETY PIN, Roll pin 7x20
9	614-12040	12	BOLT, Hex, M12 x 40, 8.8, Full Thd,
10	892-11012	12	WASHER, LOCK, M12, Spring washer A12 DIN127 FST
24	03224764	1	GEARBOX ASSY, Gearbox
26	060513370	1	GEARBOX, Final drive r
27	061067284	1	AXLE, Axle
28	03231771	1	SCREW, Locking screw
29	060513354	8	SCREW, Cheese-head screw M20x50
30	060513338	22	WASHER, LOCK, Spring washer CN20
32	006123275	2	PIN, Plain pin 8H8x32-ST DIN7
33	614-20050	14	BOLT, Hex, M20 x 50, 8.8, Hex bolt M20x50ISO40178.8
34	814-6055	1	BOLT, Hex, M6 x 55, 8.8, Hex bolt M6x55 ISO4014 8.8
35	895-11006	1	WASHER, M6, Washer 6,4 DIN125 ST
36	825-1406	1	NUT, M6, Cl 8,
37	03267565	1	SUPPORT, Support
44	614-12040	8	BOLT, Hex, M12 x 40, 8.8, Full Thd,
45	832-46412	8	NUT, LOCK, M12 x 1.75, Cl 8, Hex nut 12DIN9808
46	895-11012	16	WASHER, M12 x 24 x 2.5, Washer 13DIN125ST
47	061067444	1	SUPPORT, Holding plate
48	061050050	1	SUPPORT, Holding plate

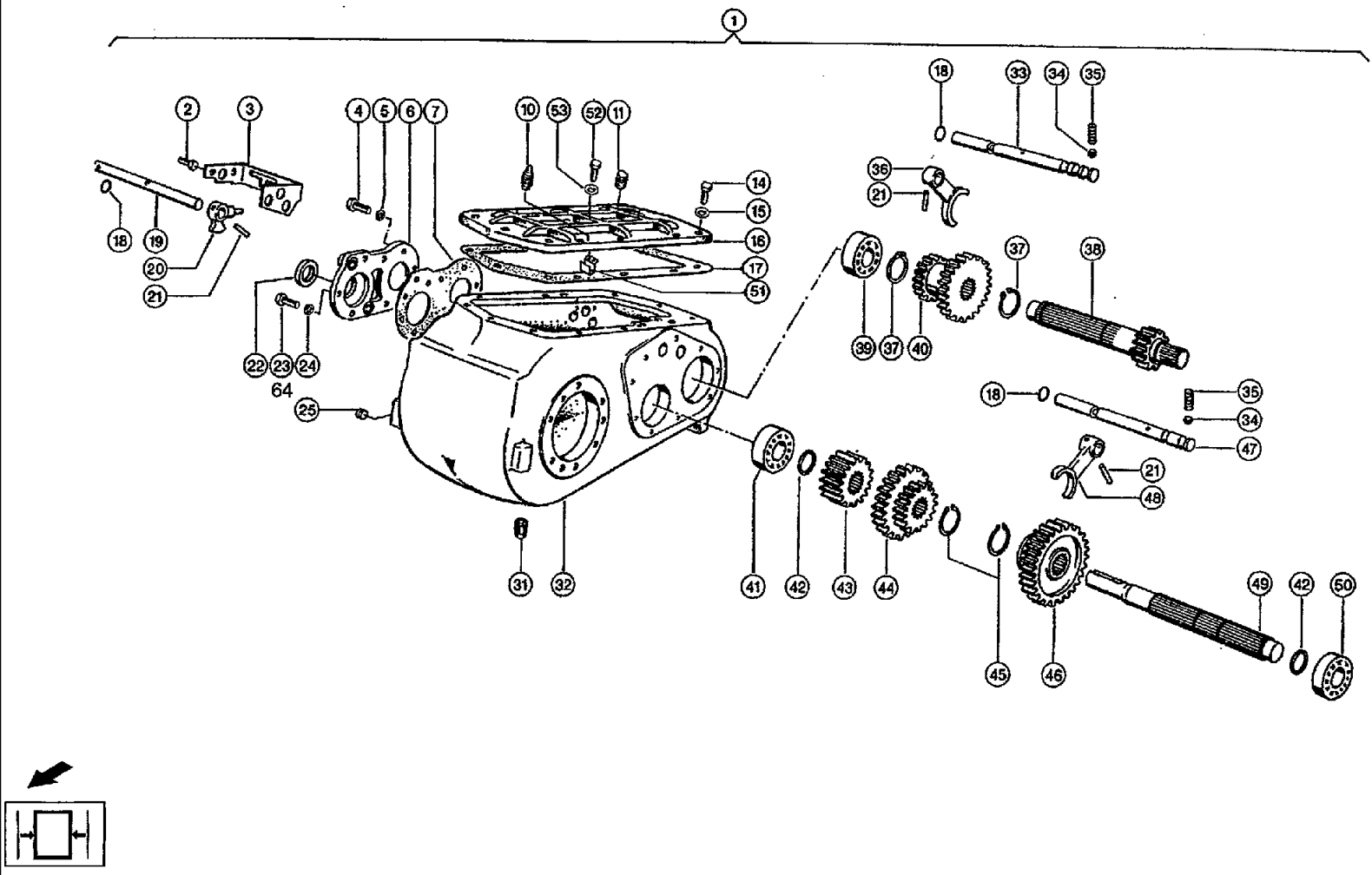
1
2
3
4
5
6
7
10
53
52
11
14
15
16
17
51
18
19
20
21
22
23
24
64
25
31
32
18
33
34
35
36
21
37
38
39
37
40
18
35
34
47
21
48
41
42
43
44
45
46
49
42
50

CF80 CASE IH CROSS FLOW COMBINE

E192(01) RUNNING GEAR- GEARBOX

Ref	Part Number	Qty	Description
2	627-8020	2	BOLT, Hex, M8 x 20, 10.9,
3	669383N0	1	SLIPPER, Gear shift gate
4	03222424	1	PIN, LARGE, Bolt M12
5	235134N1	1	WASHER, LOCK, Spring washer 12
6	669734N0	1	LID, Gearbox cover r
7	602135N0	1	GASKET, Seal
10	03223312	1	BREATHER, Breather
11	03223064	1	VANEUM GAUGE, Locking screw M24x1,5
14	627-8025	12	BOLT, Hex, M8 x 25, 10.9,
15	06455855	12	WASHER, LOCK, Spring washer A8 DIN128 FST
16	669406N1	1	LID, Gearbox cover
17	602125N1	1	GASKET, Seal
18	239361N0	3	O-RING, O-ring 20x4-N DIN3771
19	669380N0	1	ROLLER, SHIFTER, Gear-shift bar
20	669382N2	1	FINGER, Switching finger
21	215347N0	3	SPLIT PIN/SAFETY PIN, Roll pin 6x30
22	238842N0	1	RING, PACKING, Shaft seal BASL 40x58x9
23	627-10025	4	BOLT, Hex, M10 x 25, 10.9, Full Thd,
24	03253568	7	WASHER, LOCK, Spring washer 10/CLAAS
25	06109486	1	VANEUM GAUGE, Locking screw M16x1,5DIN906ST
31	03222416	1	PLUG, Locking screw M24x1,5MAGNETISCH
32	669405N1	1	HOUSING, Gearbox
33	669379N1	1	ROLLER, SHIFTER, Gear-shift bar
34	03223345	2	SPRING, COMPRESSION, Pressure spring
35	511-10140	2	BALL, 14mm Dia,

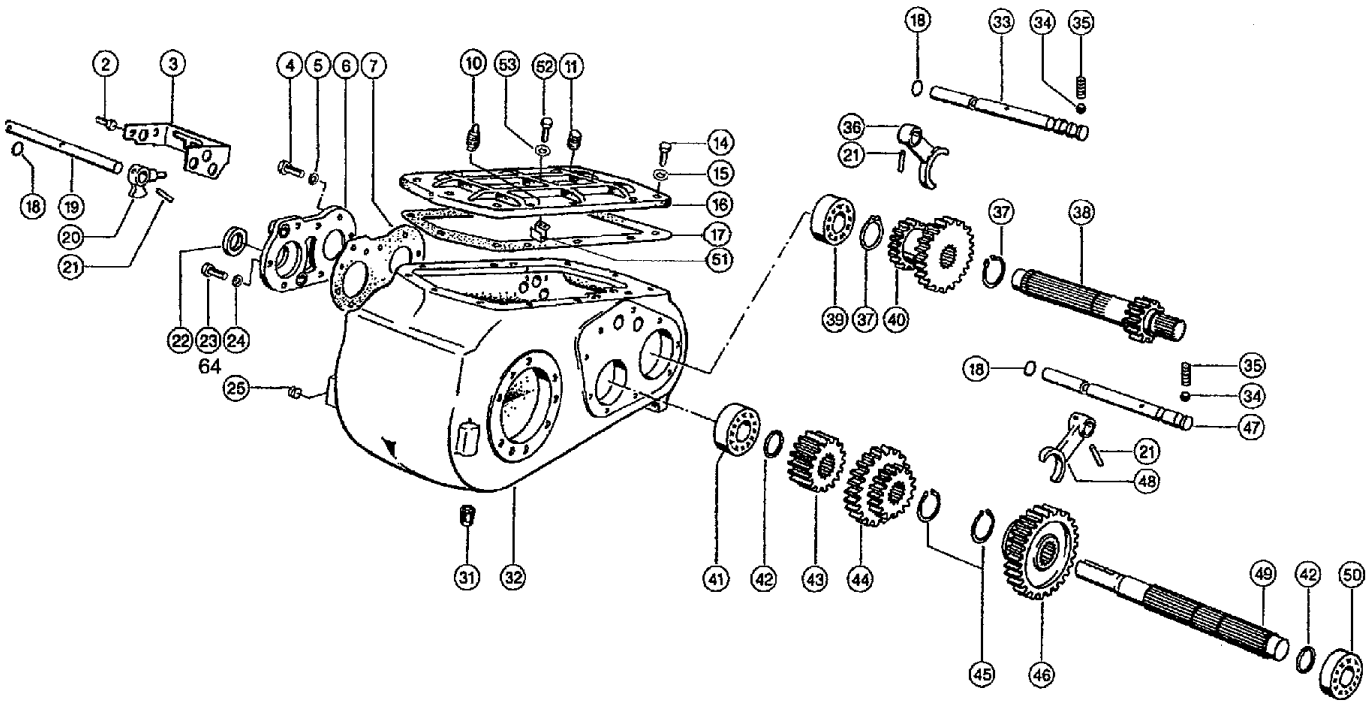
2
3
4
5
6
7
10
53
52
11
14
15
16
17
51
18
19
20
21
22
23
24
64
25
31
32
18
33
34
35
36
21
37
38
39
37
40
18
35
34
47
21
48
41
42
43
44
45
46
49
42
50

◀E190

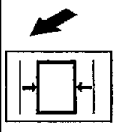

CF80 CASE IH CROSS FLOW COMBINE

E192(02) RUNNING GEAR- GEARBOX

Ref	Part Number	Qty	Description
36	98029410	1	FORK, SHIFTER, Shifter fork
37	800-1150	2	RING, SNAP, M50, Ext, Snap ring 50x2 DIN471 FST
38	669549N0	1	SHAFT, DRIVE, Drive shaft
39	03652741	1	BEARING, Grooved ball bearing 6308 DIN625
40	669399N0	1	PINION, Double shifter gear 0136x91
41	238360N1	1	BEARING, ROLLER, Cylindrical roller bearing NJ2308ETVP2DIN5412
42	06655227	3	WASHER, Thrust washer 840x50 DIN988
43	602132N1	1	PINION, Pinion 0=102,5x48
44	669402N0	1	PINION, Twin wheel 0157,2x46
45	800-1145	2	RING, SNAP, M45, Ext, Snap ring 45x1,75DIN471 FST
46	669401N0	1	PINION, Gear shifting D1 79,2x56
47	669378N0	1	ROLLER, SHIFTER, Gear-shift bar
48	03223216	1	FORK, SHIFTER, Shifter fork
49	260688N0	1	SHAFT, Main shaft 0=44,6x439,5
50	243538N0	1	BEARING, ROLLER, Cylindrical roller bearing NJ308ETVP2DIN5412
51	637881N1	1	DEFLECTOR, Oil deflector
52	614-6012	2	BOLT, Hex, M6 x 12, 8.8, Hex bolt M6x12ISO40178.8
53	239392N0	2	DISC, Washer B6
64	627-10030	3	BOLT, Hex, M10 x 30, 10.9, Full Thd,

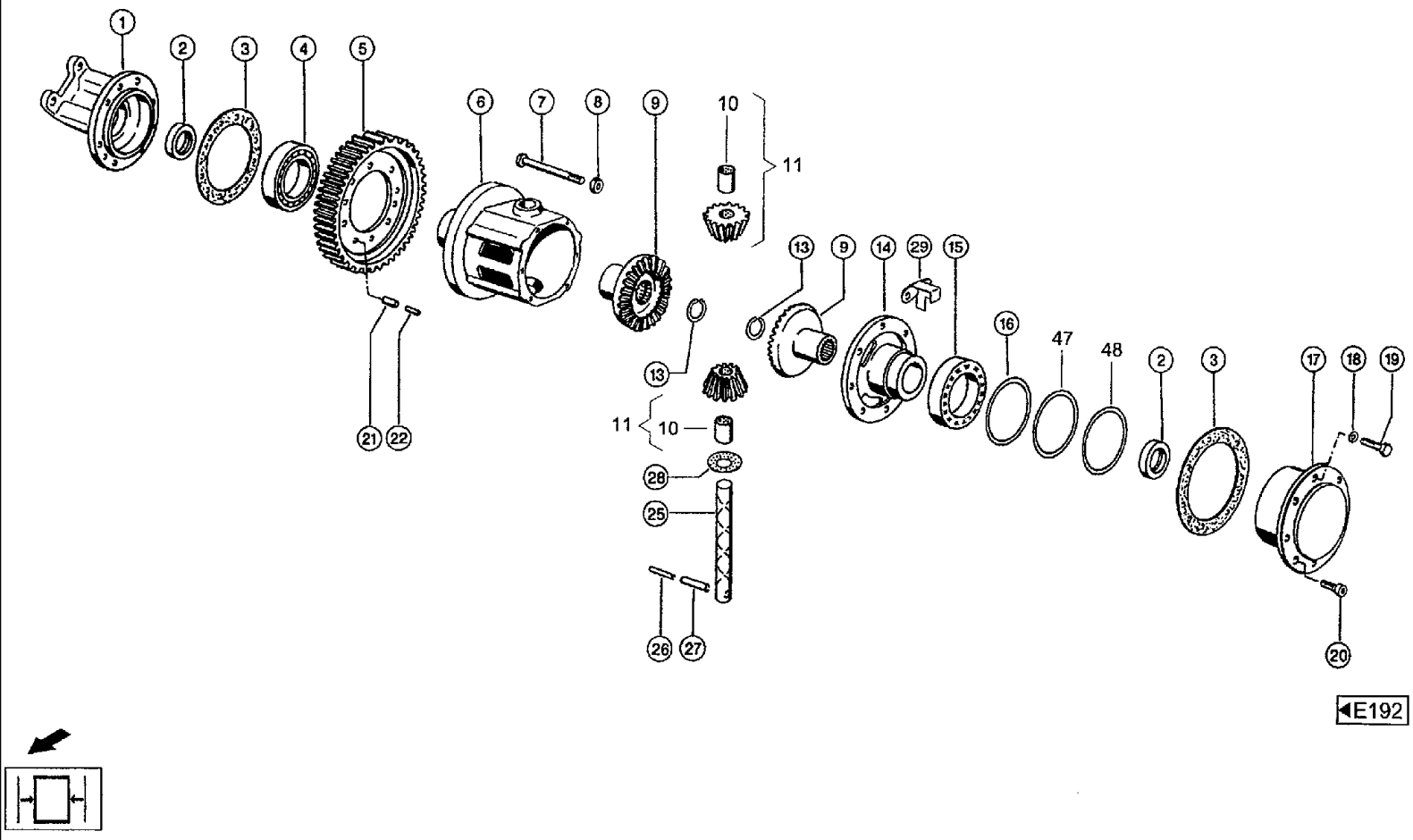
1
2
3
4
5
6
7
8
9
10
11
13
9
14
29
15
16
47
48
2
3
17
18
19
13
11
10
28
25
26
27
21
22
20
E192

CF80 CASE IH CROSS FLOW COMBINE

E193(01) RUNNING GEAR- DIFFERENTIAL

Ref	Part Number	Qty	Description
1	669404N0	1	SHIELD, Brake flange r.h. r
2	03222666	2	SEAL, Shaft seal BASL 48x72x1 2
3	98042991	2	GASKET, Seal 166x216x0,3
4	03680327	1	BEARING, Grooved ball bearing 6217 DIN625
5	609408N0	1	RING, FLYWHEEL, Toothed rim 62Z
6	609406N3	1	HOUSING, Differential housing
7	814-12160	8	BOLT, Hex, M12 x 160, 8.8, Hex bolt M12x160 ISO4014 8.8
8	238234N0	8	NUT, Lock nut 12
9	03222721	2	CROWN WHEEL, Ring gear Z=30
10	587142N1	1	BUSHING, Bearing sleeve
11	587146N1	2	SUN GEAR, Differential bevel pinion Z=14 M.BUCHSE
13	800-2142	2	WASHER, M42, Int, Snap ring 42x1,75DIN472FST
14	609407N3	1	FLANGE, Flange
15	97060119	1	BEARING, Grooved ball bearing 6018DIN625
16	03222682	1	SHIM, Shim 128x139,9x0,1
17	602139N0	1	SHIELD, Brake flange r.h. l
18	235134N1	12	WASHER, LOCK, Spring washer 12
19	614-12040	12	BOLT, Hex, M12 x 40, 8.8, Full Thd,
20	97013680	6	SCREW, Cheese-head screw M1 0x20 DIN7984 8.8
21	06161738	2	PIN, Roll pin 13x30ADIN8752
22	235679N2	2	SPLIT PIN/SAFETY PIN, Roll pin 8X30B DIN8752
25	03222762	1	AXLE, DIFF., Differencial shaft D=30 L=232
26	235668N0	1	SPLIT PIN/SAFETY PIN, Roll pin 6x50A DIN8752
27	237612N2	1	PIN, Roll pin 10x50B/DAC 320B DIN8752
29	637675N1	1	DEFLECTOR, Oil guiding plate

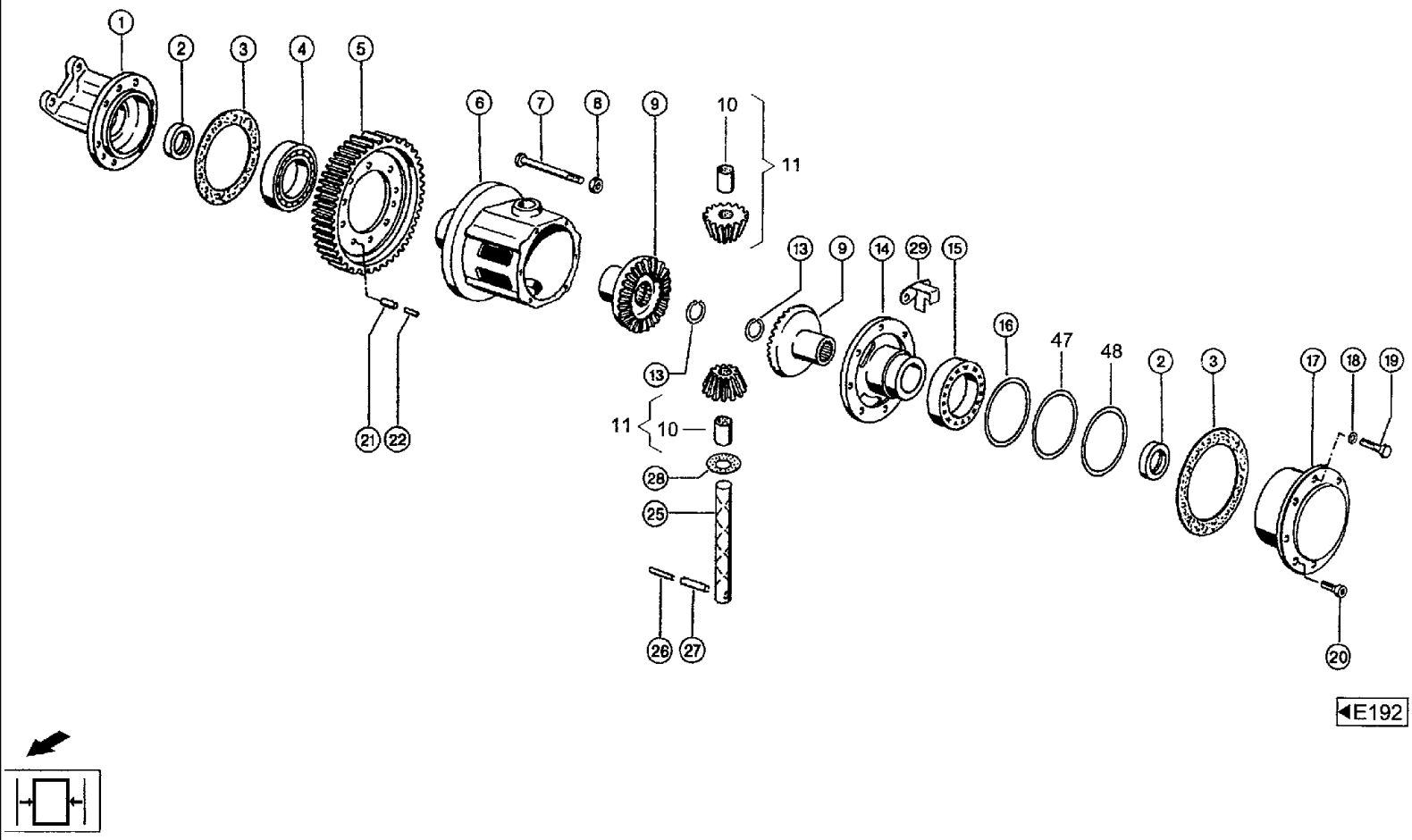
1
2
3
4
5
6
7
8
9
10
11
13
9
14
29
15
16
47
48
2
3
17
18
19
13
11
10
28
25
26
27
21
22
20
E192

Ref	Part Number	Qty	Description
47	03222690	1	SHIM, Shim 128x139,9x0,2
48	03222705	1	SHIM, Shim 128x139,9x1,0

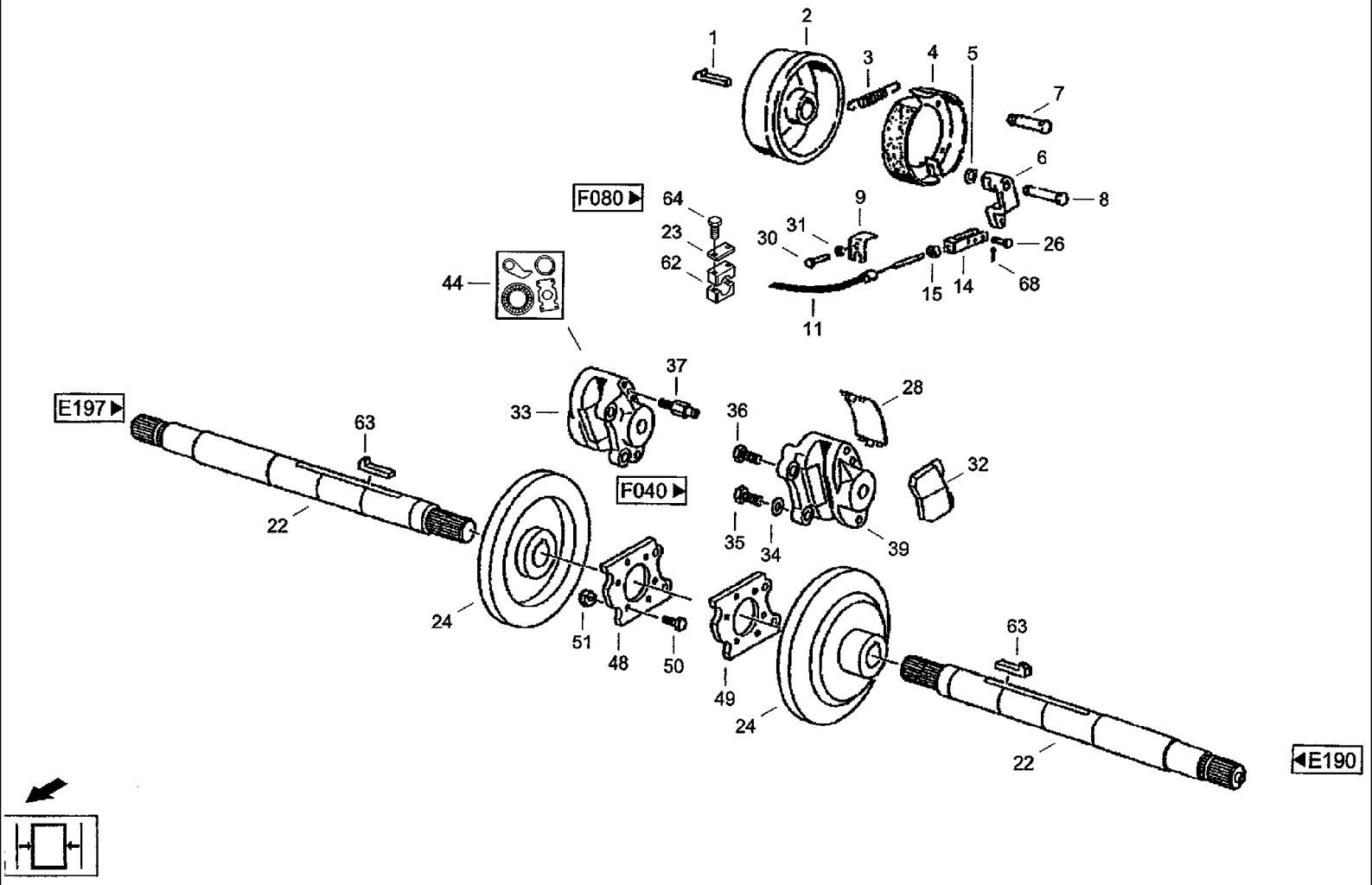
1
2
3
4
5
6
7
8
9
11
14
15
22
23
24
26
28
30
31
32
33
34
35
36
37
39
44
48
49
50
51
62
63
64
68
F080
F040
E197
E190

CF80 CASE IH CROSS FLOW COMBINE

E194(01) RUNNING GEAR- BRAKE

Ref	Part Number		Qty	Description
1	03502497		1	KEY, Gib-head key 12x8x63 DIN6887
2	03221405		1	DRUM, BRAKE, Brake drum
3	060525823		2	SPRING, TENSION, Tension spring
4	31327340		1	SHOE, BRAKE, Brake shoe k
5	800-5120		1	RING, SNAP, M20, Ext, Snap ring 20x1,75DIN471 FST
6	060525856		1	BRAKE LEVER, Brake lever
7	060525864		1	PIN, PIVOT, Bearing pin 028x85,5
8	060525872		1	PIN, PIVOT, Bearing pin 024x94,7
9	03267565		2	SUPPORT, Support
11	31289405		1	CABLE, Bowden cable lg, 4600 mm C3078
14	03231667		1	CLEVIS, Yoke ф016-00.00ю009 вилка
15	825-1410		1	NUT, M10, Cl 8,
22	03224772		2	SHAFT, Countershaft
23	06647540		1	COVER, Cover plate L-DP-2DIN3015W1
24	03222096		2	BRAKE DISC, Brake disk
26	07632670	2	1	PIN, LARGE, Bolt B10H1 1x30x25 DIN1444ST 007632236 палец
28	060515741		2	COVER, Sealing cover ATEB2
30	614-6035		1	BOLT, Hex, M6 x 35, 8.8, Full Thd, Bolt, Hex, M6 x 35, 8.8, Full Thd, ISO4017
31	825-1406		1	NUT, M6, Cl 8,
32	060515766		4	BRAKE, PAD, Brake lining B2 (ASBESTFREI)
33	98042467		1	CALIPER, BRAKE, Fixed saddle r
34	060516742		2	WASHER, LOCK, Spring washer CN16
35	06377816		2	SCREW, Hex bolt M 16x1, 5x45 ISO8676 10.9
36	98042469		2	SCREW, Precision bolt M16x42 D=16,5K6 10.9 DIN610
37	060510882		2	BREATHER, Breather valve

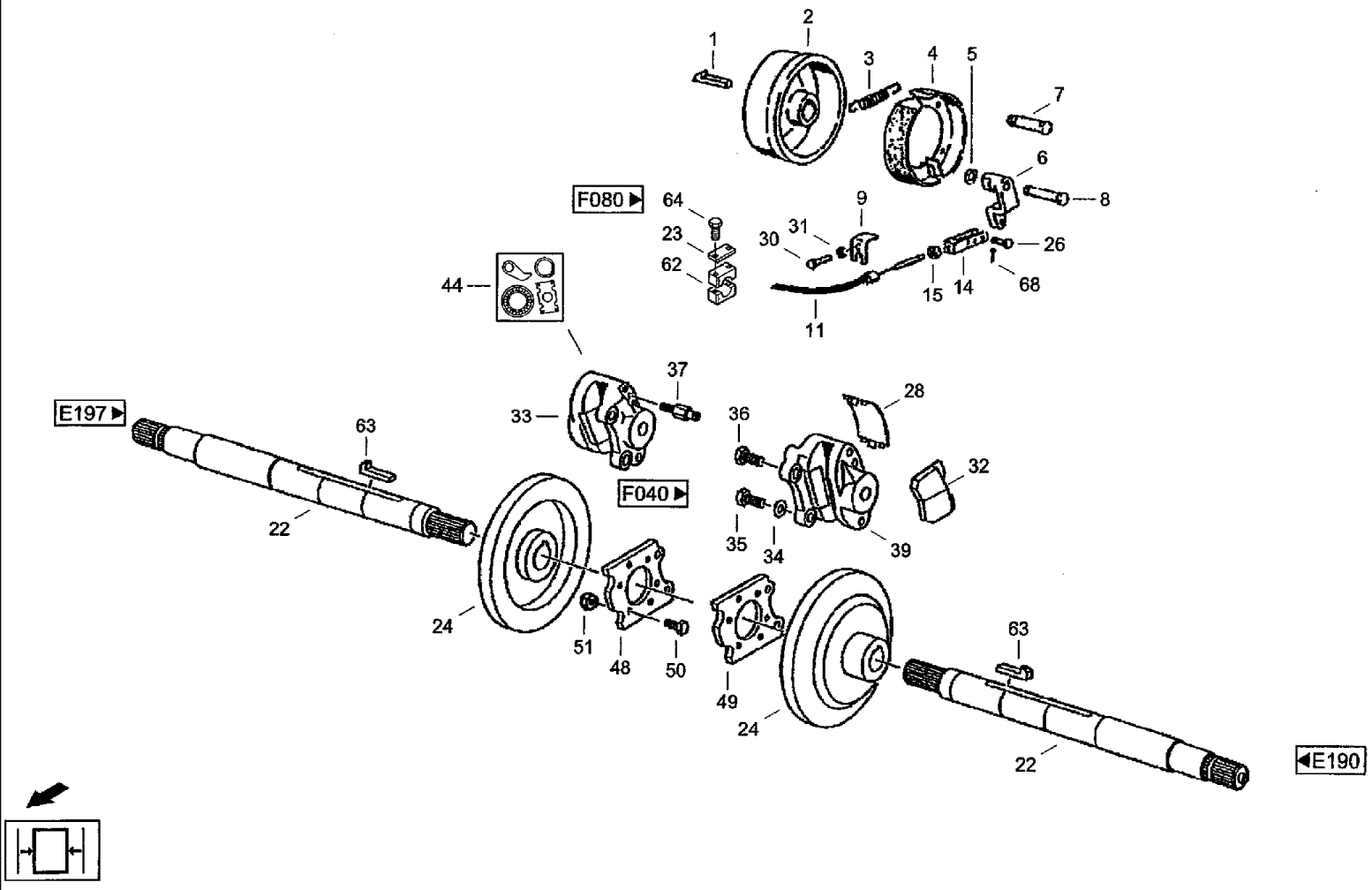
1
2
3
4
5
6
7
8
9
11
14
15
22
23
24
26
28
30
31
32
33
34
35
36
37
39
44
48
49
50
51
62
63
64
68
F080
F040
E197
E190

CF80 CASE IH CROSS FLOW COMBINE

E194(02) RUNNING GEAR- BRAKE

Ref	Part Number	Qty	Description
39	98042468	1	CALIPER, BRAKE, Fixed saddle I
44	98042997	1	NO DESCRIPTION, Repair-kit 1Sa
48	060515725	1	FLANGE, Flange r
49	060515733	1	FLANGE, Flange I, B2
50	03241665	12	SCREW, Hex bolt M12x40/10.9 ISO4014
51	829-1412	12	NUT, M12, Cl 10, Hex nut M12 ISO4032 10
62	06647620	1	SHIN, Clamping halves L-KP-2-R-15 DIN3015 PP
63	97031732	2	KEY, Gib-head key 1 4x9x75 DIN6887ST
64	814-6035	2	BOLT, Hex, M6 x 35, 8.8, Bolt, Hex, M6 x 35, 8.8, ISO 4014
68	733-3220	1	PIN, SPLIT (COTTER), M3.2 x 20, Splint pin 3,2x20 DIN94 ST

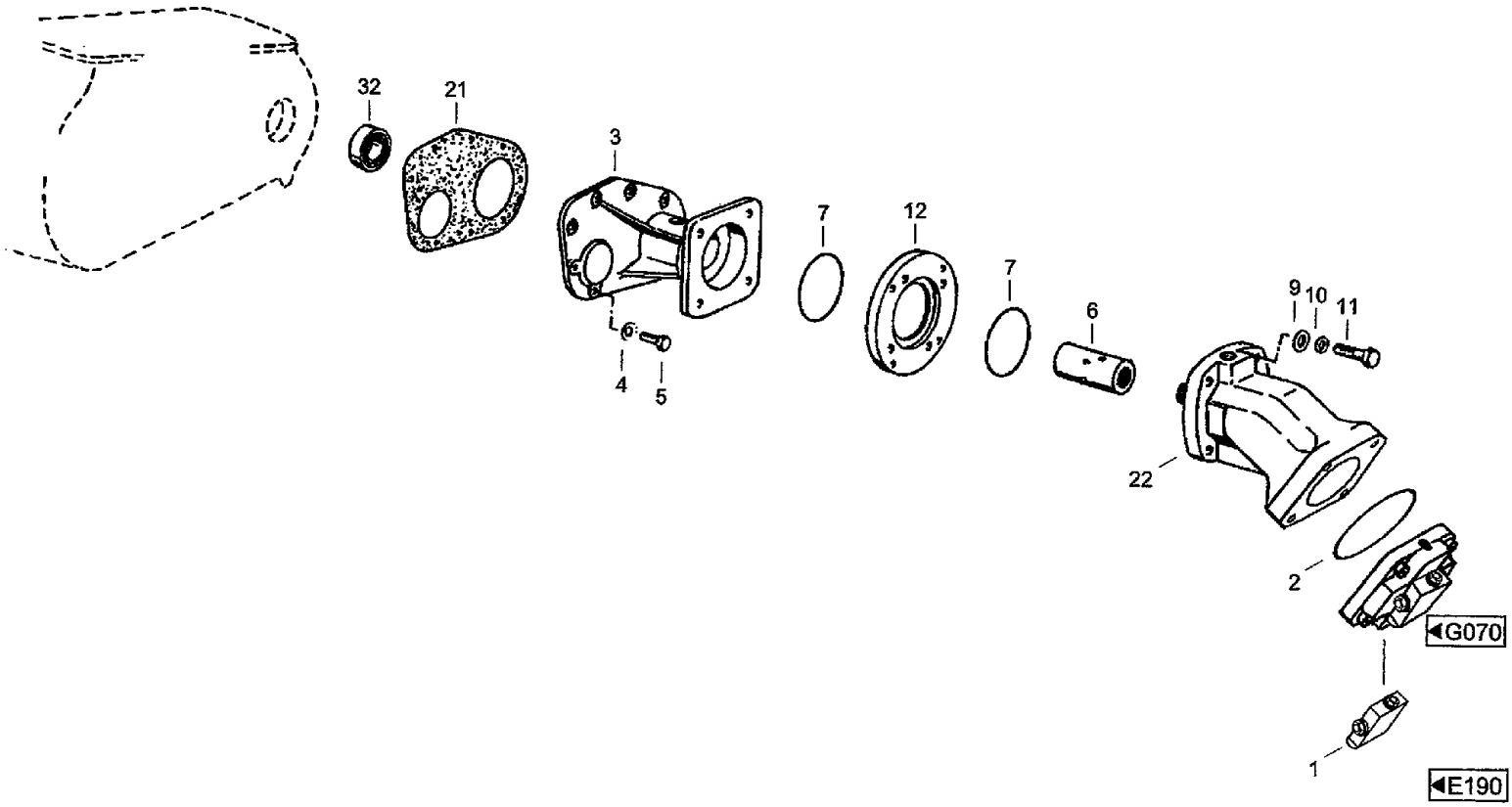
32
21
3
7
12
7
6
9
10
11
22
2
G070
1
E190
4
5

CF80 CASE IH CROSS FLOW COMBINE

E195 RUNNING GEAR- HYDROSTATIC GROUND DRIVE

Ref	Part Number	Qty	Description
1	03001324	1	VALVE, Scavenging valve A2FM125
2	03129443	1	O-RING, O-ring 98,02x3,53-S-FMK70
3	03224780	1	HOUSING, Flange
4	03253568	9	WASHER, LOCK, Spring washer 10/CLAAS
5	614-10030	9	BOLT, Hex, M10 x 30, 8.8,
6	060525952	1	RING, GUIDE, Bushing
7	03231722	1	O-RING, O-ring 158x3
9	895-11016	4	WASHER, M16 x 30 x 3, Washer 17DIN125ST
10	060516742	4	WASHER, LOCK, Spring washer CN16
11	814-16090	4	BOLT, Hex, M16 x 90, 8.8,
12	03224797	1	FLANGE, Intermediate flange
21	602124N0	1	GASKET, Seal
22	061067901	1	MOTOR, Constant motor A2FM125/61W-NAB027
32	238963N0	1	BEARING, ROLLER, Cylindrical roller bearing NJ208ETVP2DIN5412

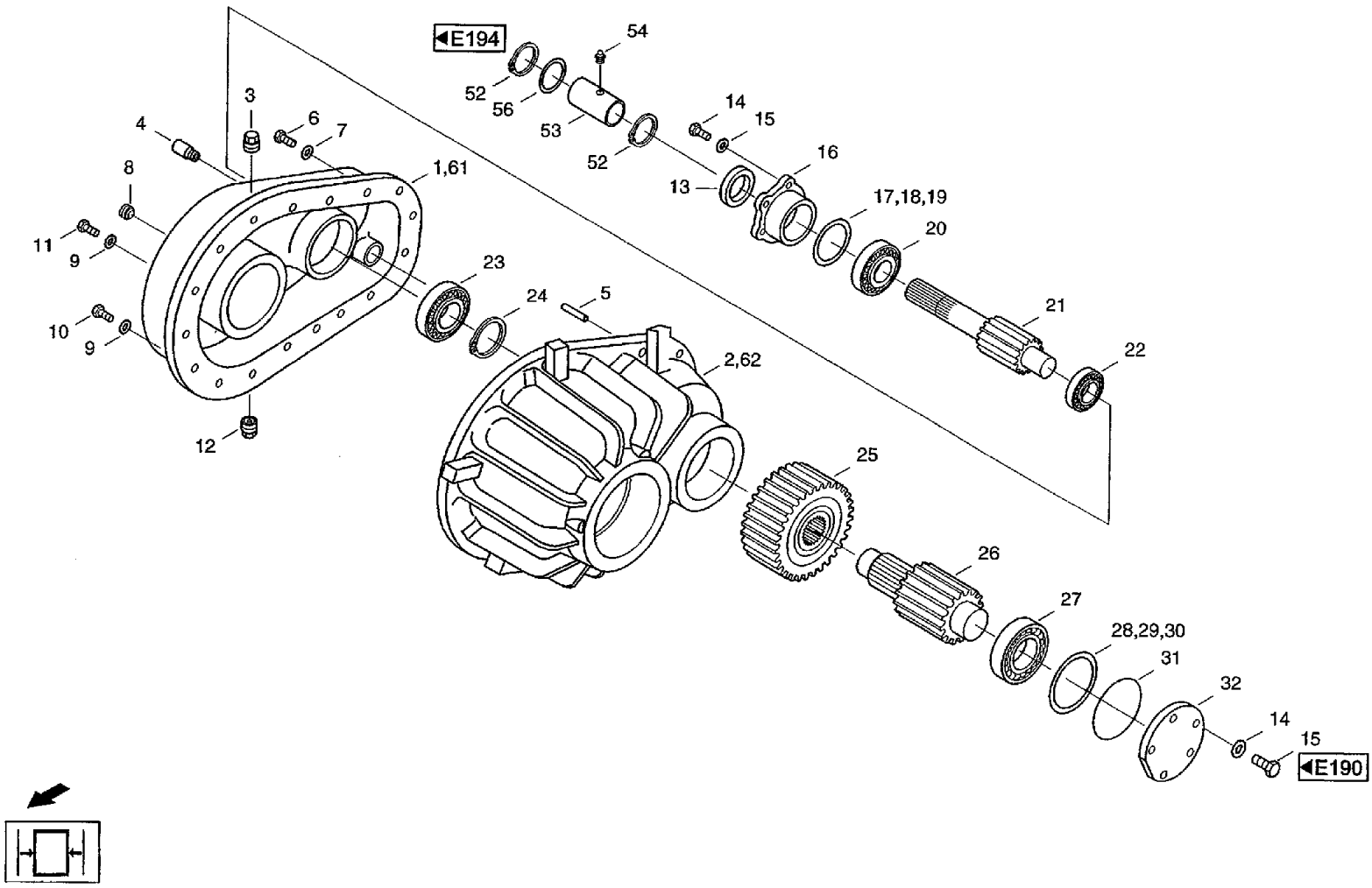
E194
54
52
56
53
52
14
15
16
13
17,18,19
20
21
22
3
4
6
7
8
1,61
11
9
10
9
12
23
24
5
2,62
25
26
27
28,29,30
31
32
14
15
E190

CF80 CASE IH CROSS FLOW COMBINE

E197(01) RUNNING GEAR- FINAL DRIVE

Ref	Part Number	Qty	Description
1	03266708	1	HOUSING, Axle body I, i
2	03266804	1	HOUSING, Axle body I, a
3	03223064	2	VANEUM GAUGE, Locking screw M24x1,5
4	03222963	2	BREATHER, Breather M10x1
5	03266900	4	SPLIT PIN/SAFETY PIN, Plain pin 16x55 DIN6325
6	864-12040	2	SCREW, Hex Soc Hd, M12 x 40, 8.8, Cheese-head screw M12x40 DIN912 8.8
7	242824N1	2	WASHER, Locking ring VSKZ12
8	06109767	2	SCREW, Locking screw M10x1 DIN906
9	03266958	30	WASHER, LOCK, Locking ring VSKZ16
10	962-16050	24	SCREW, Hex Soc Hd, M16 x 50, 10.9, Cheese-head screw M16x50DIN91210.9
11	03266564	6	SCREW, Cheese-head screw M16x60 DIN912
12	03222416	2	PLUG, Locking screw M24x1,5MAGNETISCH
13	03266611	2	SEAL, OIL, Shaft seal AS45x72x8 DIN3760
14	627-10025	20	BOLT, Hex, M10 x 25, 10.9, Full Thd, Hex bolt M10x25ISO401710.9
15	06454901	20	WASHER, LOCK, Spring washer A10 DIN128 FST
16	03266660	2	COVER, Cap
17	233202N0	2	RING ASSY., Shim 75x85x0,1
18	233203N0	2	RING ASSY., Shim 75x85x0,3
19	233204N0	2	RING ASSY., Shim 75x85x0,5
20	03266716	2	BEARING, ROLLER, Taper roller bearing 33209 DIN720
21	03266765	2	SHAFT, GEAR, Pinion shaft
22	03671246	2	BEARING, BALL, Taper roller bearing 33208 DIN720
23	97061259	2	BEARING, ROLLER, Taper roller bearing 30310DIN720
24	03266812	2	CIRCLIP, Snap ring 67x2,5 DIN471
25	03266861	2	GEAR, WHEEL, Spur gear 37Z

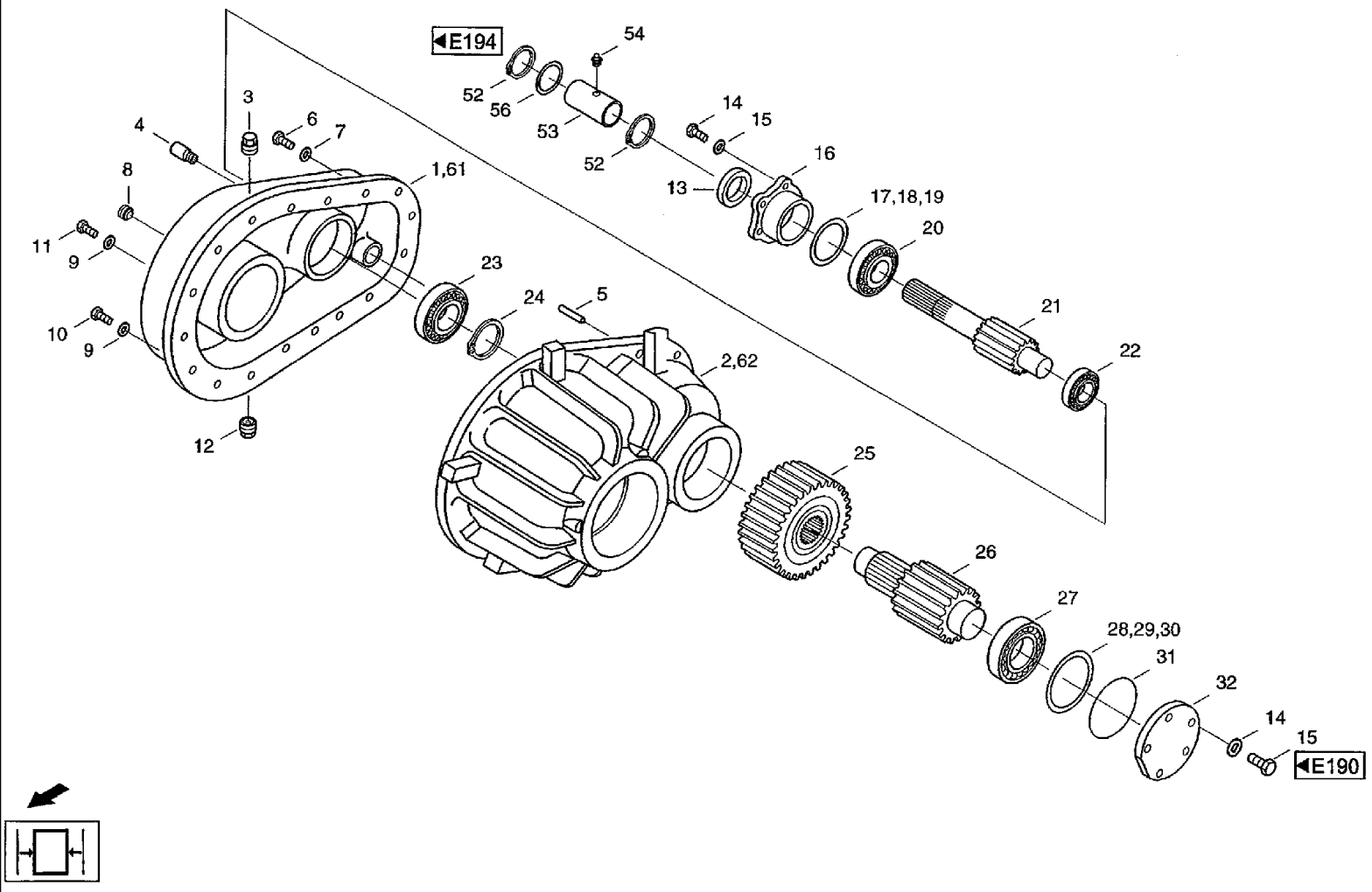
E194
54
52
56
53
52
14
15
16
13
17,18,19
20
21
22
3
4
6
7
8
1,61
11
9
10
9
12
23
24
5
2,62
25
26
27
28,29,30
31
32
14
15
E190

CF80 CASE IH CROSS FLOW COMBINE

E197(02) RUNNING GEAR- FINAL DRIVE

Ref	Part Number	Qty	Description
26	03266917	2	COUNTERSHAFT, Counter shaft
27	03266966	2	BEARING, ROLLER, Taper roller bearing 30311ADIN720
28	233009N0	2	DISC, Shim 100x120xO,1/ST2KDIN988
29	06635102	2	SHIM, Shim 100x120x0,3 DIN988
30	06635110	2	SHIM, Shim 100x120x0,5 DIN988
31	215350N2	2	O-RING, O-ring 110x3,5-NDIN3771
32	03266628	2	COVER, Cap
33	03266677	2	COVER, Cap
34	03222883	2	NUT, Castllated nut M42x1,5
35	06161754	2	PIN, Roll pin 5x60A DIN8752
36	838-5860	2	PIN, M8 x 60, Slotted, Roll pin 8x60 DIN1481 FST
37	03266724	2	RING, Spacer ring
38	03266773	2	BEARING, ROLLER, Taper roller bearing 32311BDIN720
39	239370N0	2	DISC, Shim 55x68x1/ST2K DIN988
40	97022260	2	WASHER, Thrust washer 8100x120x3,5 DIN988 FST
41	800-21120	2	SNAP RING, M120, Int, Snap ring 120x4 DIN472 FST
42	03266820	2	RING, Spacer ring
43	03266878	2	GEAR, WHEEL, Spur gear 47Z
44	800-21180	2	SNAP RING, M180, Int, Snap ring 180x4 DIN472 FST
45	03266925	2	WASHER, Thrust washer 8150x180
46	03266974	2	BEARING, ROLLER, Taper roller bearing 32220 DIN720
47	03266580	2	RING, Spacer ring
48	03266636	2	SEAL, OIL, Shaft seal 62-140x180x15
49	03266685	2	HALF SHAFT, Wheel shaft
50	03222947	16	STUD, Wheel bolt M22x1,5x65

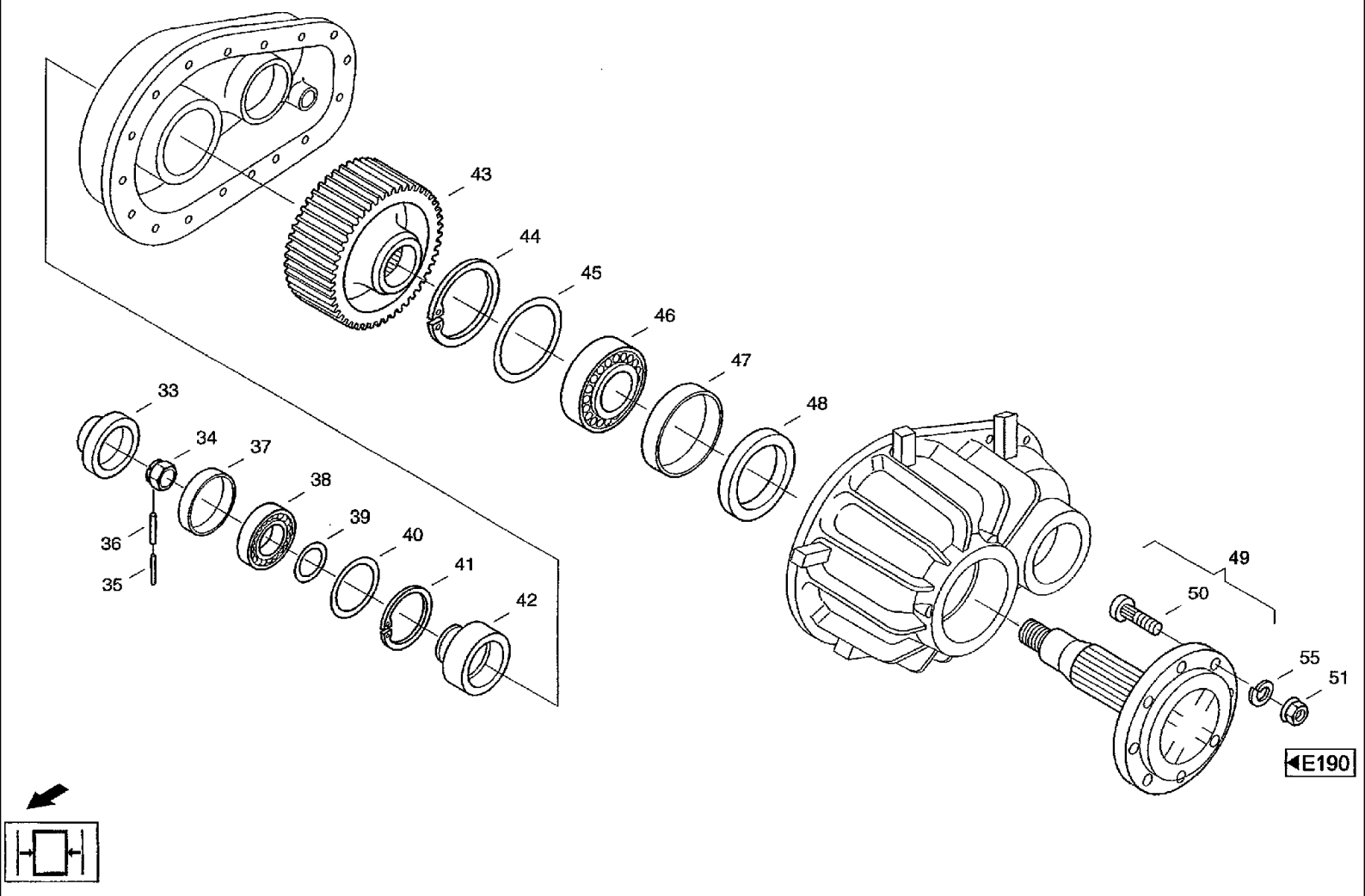
43
44
45
46
47
48
33
34
37
38
39
40
41
42
36
35
49
50
55
51
E190

CF80 CASE IH CROSS FLOW COMBINE

E197(03) RUNNING GEAR- FINAL DRIVE

Ref	Part Number	Qty	Description
51	006111753	16	NUT, Wheel nut B22 DIN74361 8
52	800-5145	4	RING, SNAP, M45, Ext, Snap ring 45x2,5 DIN471 FST
53	679550N2	2	BUSHING, Bushing
54	03265731	2	NIPPLE, LUBE, Grease nippel BS6 DIN71412
55	006456567	16	WASHER, LOCK, Spring washer 022,5 DIN74361
56	98039644	2	WASHER, Washer
61	03266757	1	HOUSING, Axle body r, i
62	03266853	1	HOUSING, Axle body r, a

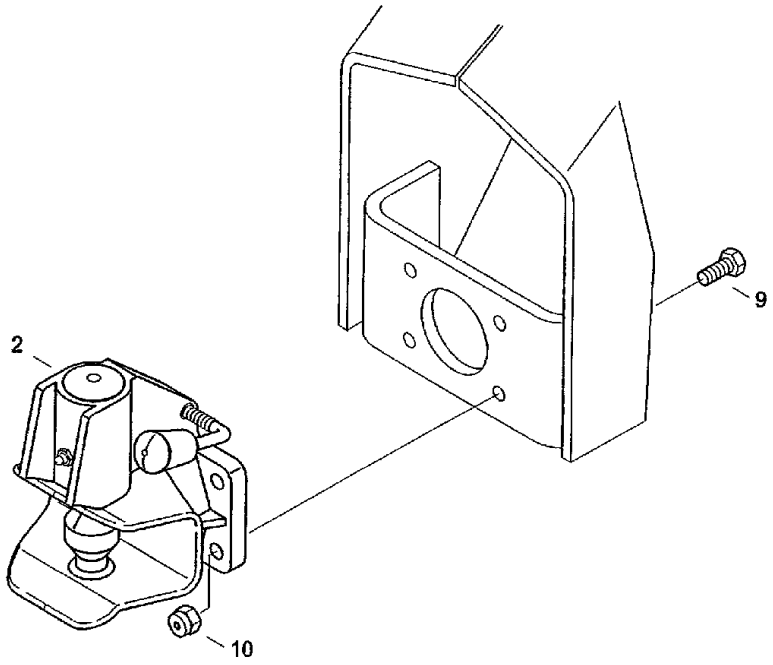
2
9
10

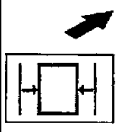

CF80 CASE IH CROSS FLOW COMBINE

E200 RUNNING GEAR- HITCH

Ref	Part Number	Qty	Description
2	060501576	1	DRAW HOOK, Hitch AUTOMATISCH B2 TYP243 U1 15E
9	627-10040	4	SCREW, Hex, M10 x 40, 10.9, Full Thd, Hex bolt M1 Ox40ISO401 7 10.9
10	06116147	4	NUT, Hex nut 10 DIN980 10

CF80 CASE IH CROSS FLOW COMBINE

E213 RUNNING GEAR- TOOL BOX

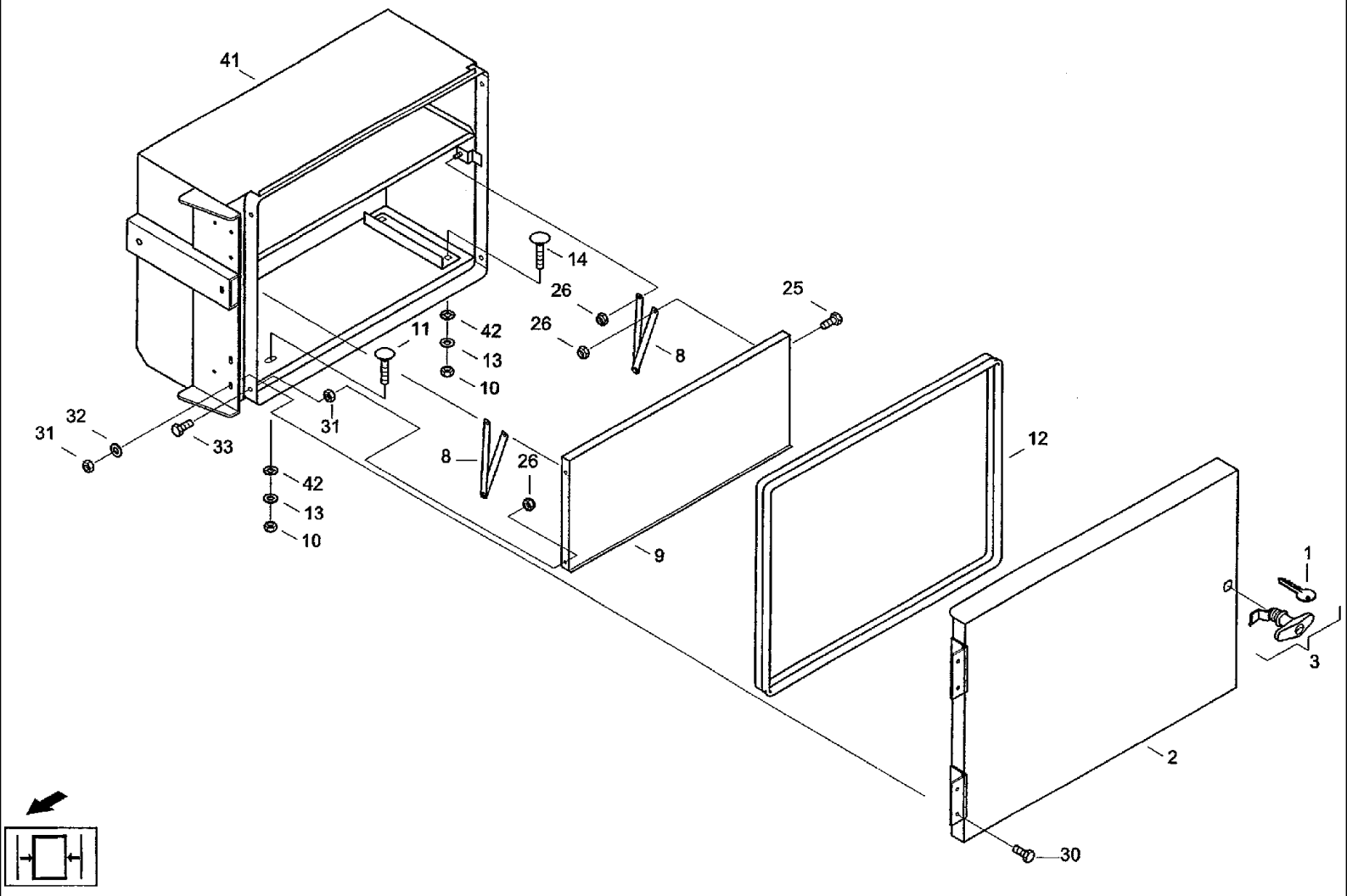

CF80 CASE IH CROSS FLOW COMBINE

E213 RUNNING GEAR- TOOL BOX

Ref	Part Number	Qty	Description
1	03221385	1	KEY, Key e021м-10.00.000 дверь
2	31290778	1	DOOR, Door e021м-20.00.000 дверь
3	06440865	1	LOCK, Locking toggle 1 Kg 500-9308/200-0635 5285-3316:000 замок
8	060065652	2	SUPPORT, Support 524-53022:000/04 подпорка
9	31299616	1	FRAME, Door 524-53026:000/13 крышка
10	825-1410	4	NUT, M10, Cl 8,
11	07755342	2	SCREW, Flat-round-head screw M1 0x20 DIN603 8,8
12	060065781	1	RUBBER SEAL, Rubber seal 2195+/-1mm
13	06577003	4	WASHER, SPECIAL, Locking washer M10
14	07755576	2	SCREW, Flat-round-head screw M1 0x25 DIN603 8.8
25	614-6016	4	BOLT, Hex, M6 x 16, 8.8,
26	832-10406	6	NUT, M6 x 1, Cl 8, Hex nut M6 DIN982 8
30	614-6016	4	BOLT, Hex, M6 x 16, 8.8,
31	825-1406	6	NUT, M6, Cl 8,
32	06577036	4	WASHER, SPECIAL, Locking washer M6
33	614-6025	2	BOLT, Hex, M6 x 25, 8.8, Hex bolt M6x25ISO40178.8
41	31290753	1	BOX, Box
42	06502791	4	WASHER, Washer V11 DIN440100HV

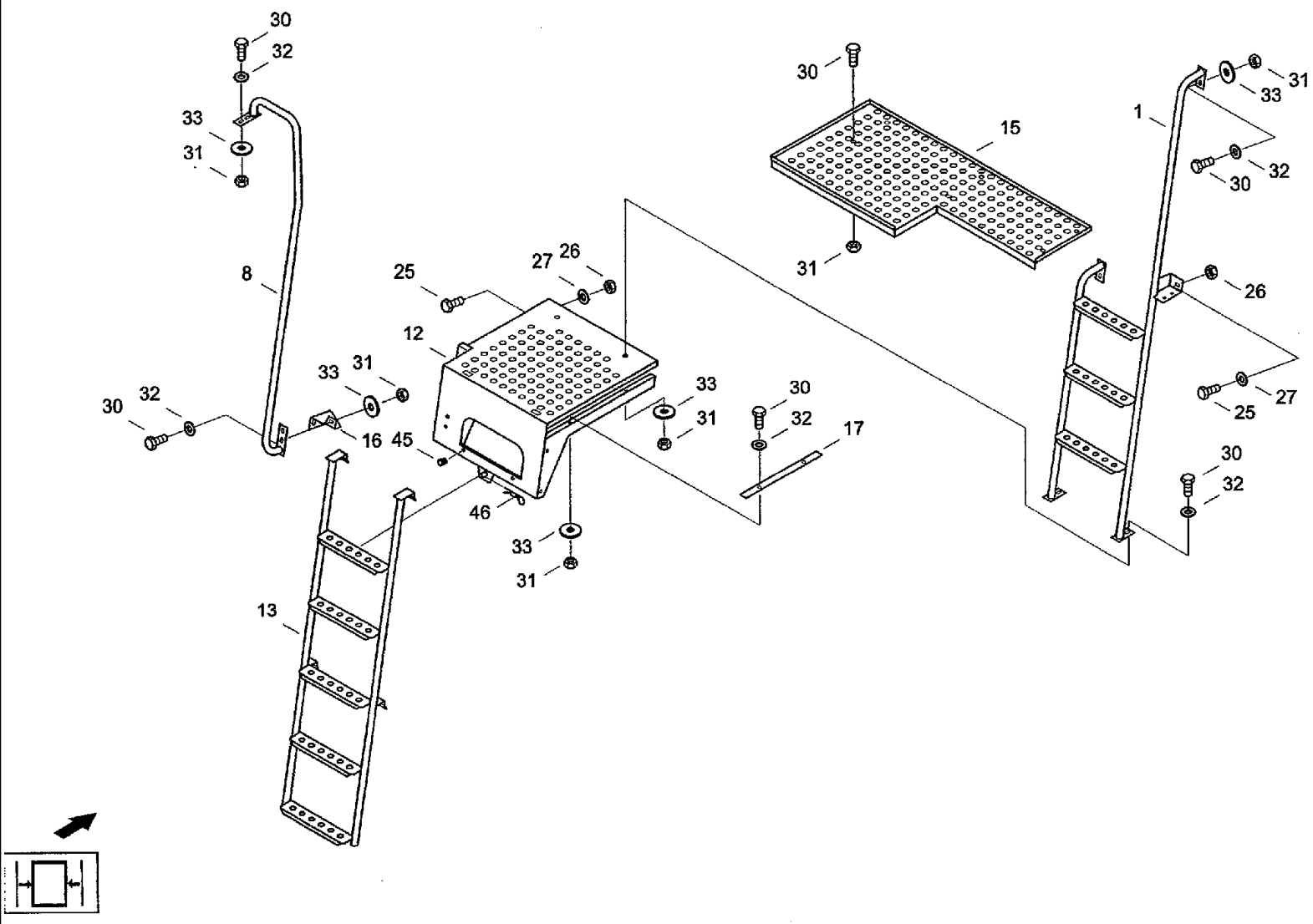
30
32
33
31
8
30
32
33
31
16
45
46
25
27
26
12
33
31
30
32
17
33
31
13
30
31
15
1
33
31
30
32
26
27
25
30
32

CF80 CASE IH CROSS FLOW COMBINE

E220 RUNNING GEAR- STEPS, REAR

Ref	Part Number	Qty	Description	
1	31291641	1	RAMP, Ladder piece	e022-10.30.000 лестница верхняя
8	31291713	1	RAMP, Handrail	e022-20.10.000 поручень
12	31319750	1	PLATFORM, Platform	e022-10.20.000 платформа
13	31319775	1	LADDER, Ladder	e022-10.10.000 лестница
15	31291545	1	STEP, Step	e022-30.00.001 подножка
16	31297446	1	ANGLE BAR, Angle	e022-20.00.001 уголок
17	31310131	1	BAR, Rail	
25	614-10030	3	BOLT, Hex, M10 x 30, 8.8,	
26	825-1410	5	NUT, M10, Cl 8,	
27	06577003	5	WASHER, SPECIAL, Locking washer M10	
30	614-8020	16	BOLT, Hex, M8 x 20, 8.8, Hex bolt M8x20 ISO4017 8.8	
31	825-1408	10	NUT, M8, Cl 8,	
32	06577028	16	WASHER, SPECIAL, Locking washer M8	
33	895-25008	10	WASHER, M8 x 20 x 1.6, Washer 8,4 DIN9021 140HV	
45	01162462	2	BUFFER, RUBBER, Rubber stop F1023	
46	97036572	1	SPLIT PIN/SAFETY PIN, Spring clip 3,2 DIN1 1024	

E230 RUNNING GEAR- HYDROSTATIC DRIVEN REAR AXLE, VARIOUS COMPONENTS

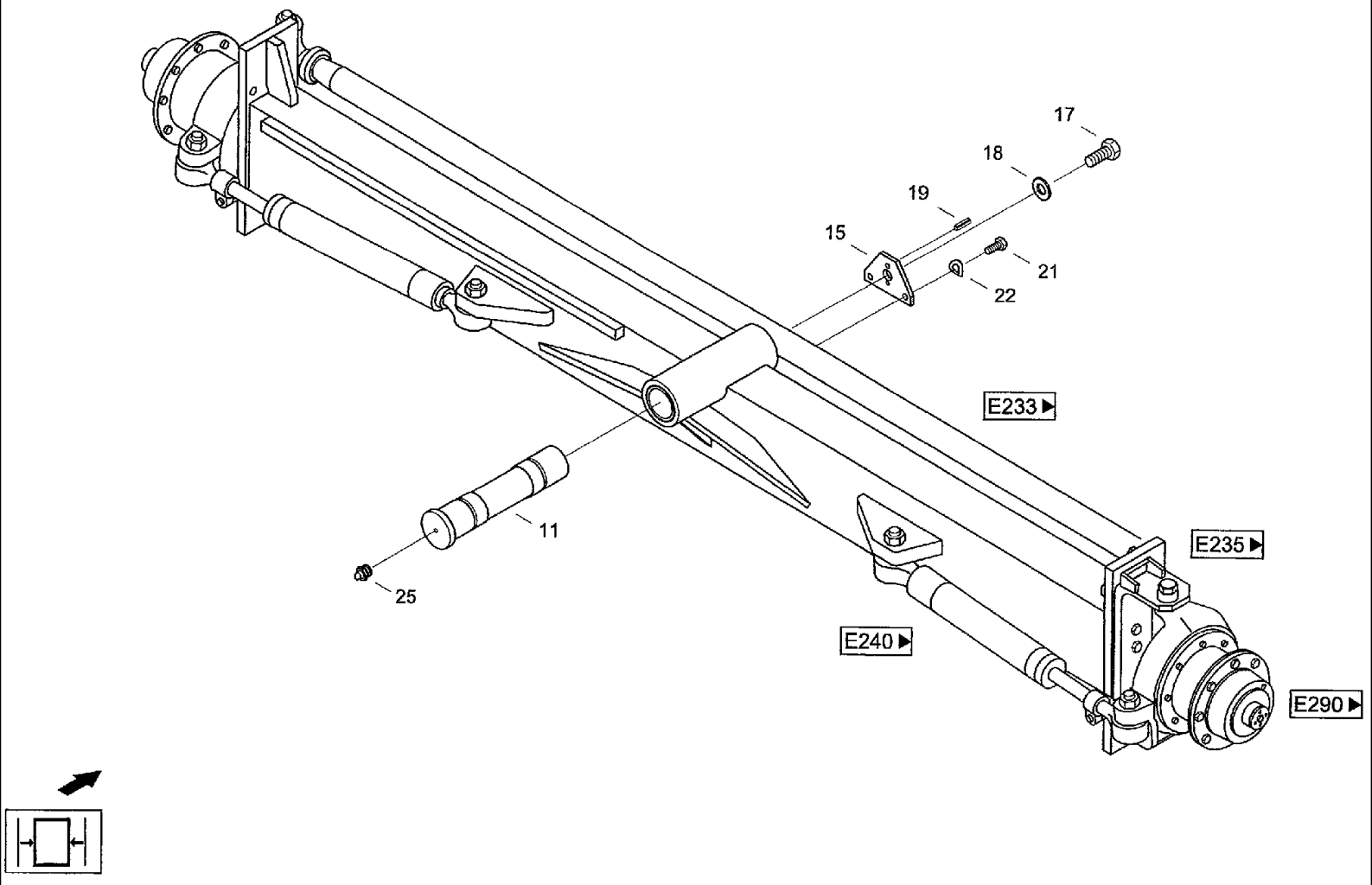

CF80 CASE IH CROSS FLOW COMBINE

E230 RUNNING GEAR- HYDROSTATIC DRIVEN REAR AXLE, VARIOUS COMPONENTS

Ref	Part Number	Qty	Description
11	061031843	1	STUD, Steered axle bolt
15	061031851	1	PLATE, LOCKING, Lock plate
17	006379303	1	SCREW, Hex bolt M20x1, 5x45 ISO8676 8.8
18	06461402	1	WASHER, Washer 21 DIN432 ST
19	060160844	1	PIN, Notched dowel 10x20-ST DIN1473
21	614-10025	2	BOLT, Hex, M10 x 25, 8.8, Full Thd, Hex bolt M10x25IS040178.8
22	06501428	2	WASHER, SPRING, Wave washer spring B10DIN137FST
25	03617056	1	NIPPLE, LUBE, Grease nippel AM8x1 DIN71412

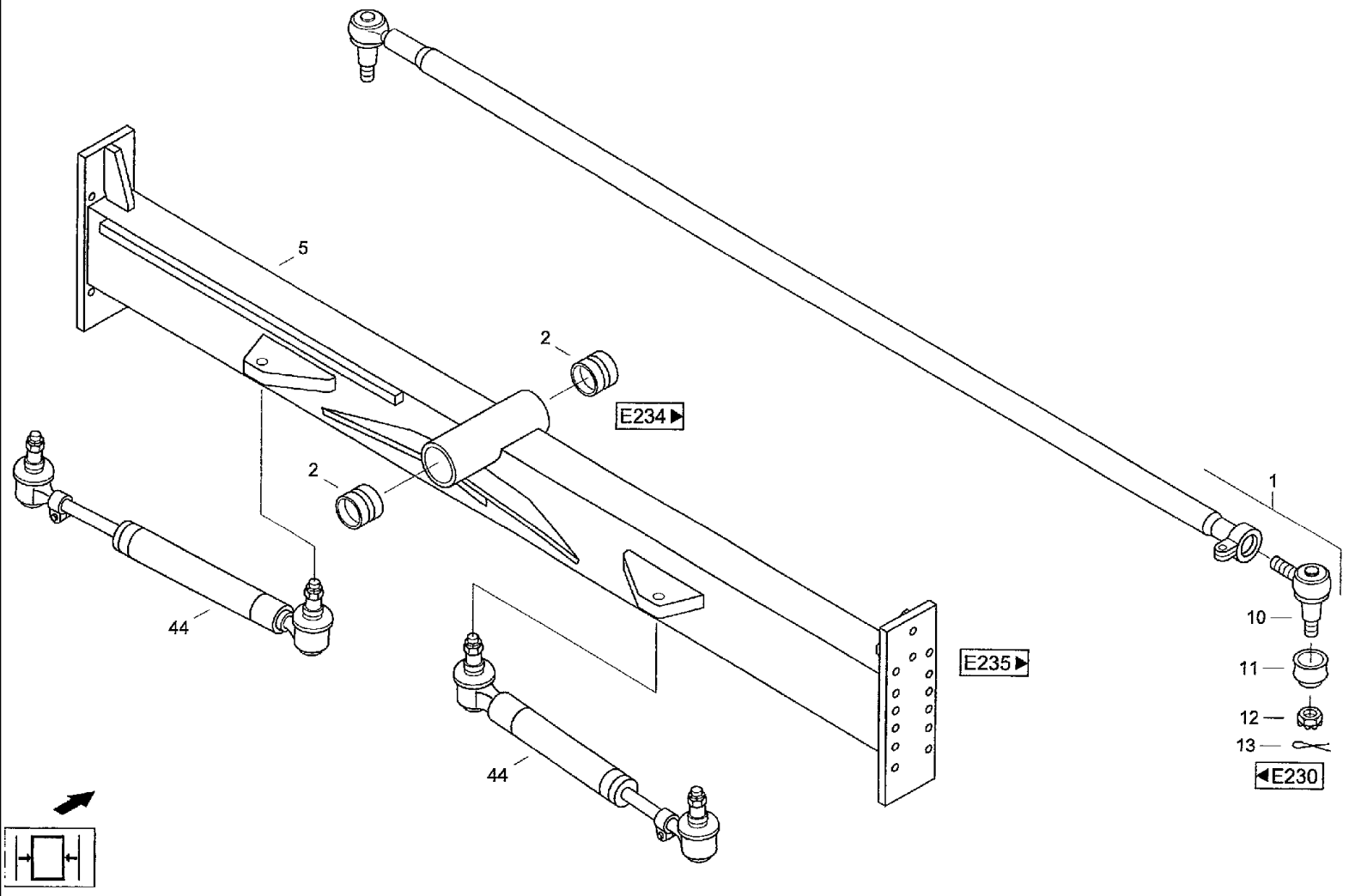
5
2
E234
2
1
44
10
11
12
13
E235
44
E230

CF80 CASE IH CROSS FLOW COMBINE

E233 RUNNING GEAR- HYDROSTATIC DRIVEN REAR AXLE

Ref	Part Number	Qty	Description
1	649838N1	1	TIE ROD, Track rod k
2	061024748	2	BUSHING, Sleeve 60/72x60
5	260659N0	1	AXLE, STEERING, Steering axle body
10	03224112	1	COUPLING, Ball joint
11	643311N0	2	BELLOWS, Sealing bellows
12	06225264	2	NUT, Castllated nut M24x1,5DIN93722H
13	06403098	2	PIN, SPLIT (COTTER), Splint pin 5x45 DIN94 ST
44	084783N0	2	CYLINDER STEERING, Hydraulic cylinder k

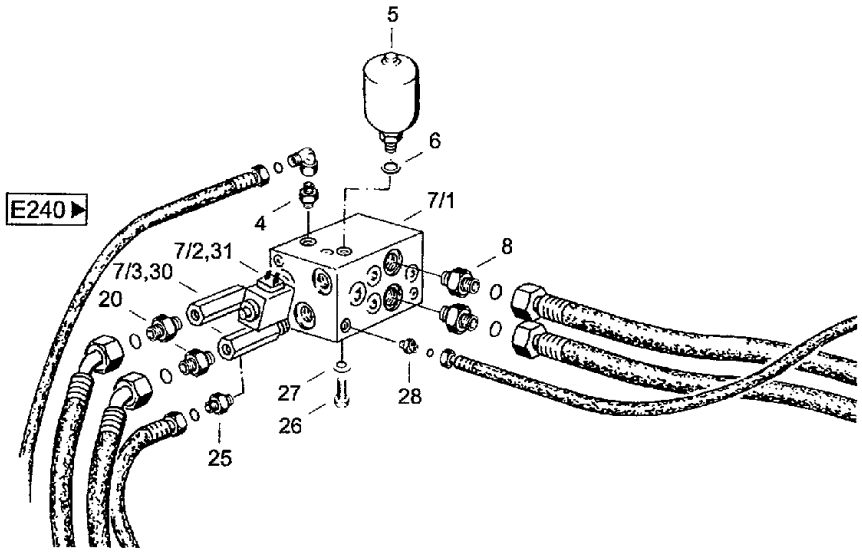

C001

CF80 CASE IH CROSS FLOW COMBINE

E234 RUNNING GEAR- CONTROL BLOCK

Ref	Part Number	Qty	Description
4	03433024	1	ADAPTER, Male connector GE15-LM-ED/OMD
5	649664N0	1	ACCUMULATOR, Spring store
6	004101552	1	SEAL ASSY., Seal A16X22DIN7603CU
7	649663N0	1	CONTROL BLOCK, Control block
8	03434853	4	ADAPTER, Male connector GE25-SR-ED/OMD
20	03435637	2	ADAPTER, Male connector GE25-S/R3/4/OMD
25	03435774	1	ADAPTER, Male connector GE18-L/M18x1,5/OMD
26	614-10020	3	BOLT, Hex, M10 x 20, 8.8, Full Thd,
27	06577003	3	WASHER, SPECIAL, Locking washer M10
28	03434958	2	ADAPTER, Male connector GE10-LM-ED/OMD
30	643077N0	2	VALVE, Outlet valve
31	643076N0	1	VALVE, Directional control valve 3/2

E235(01) RUNNING GEAR- HYDROSTATIC DRIVEN REAR AXLE, DRIVING UNIT

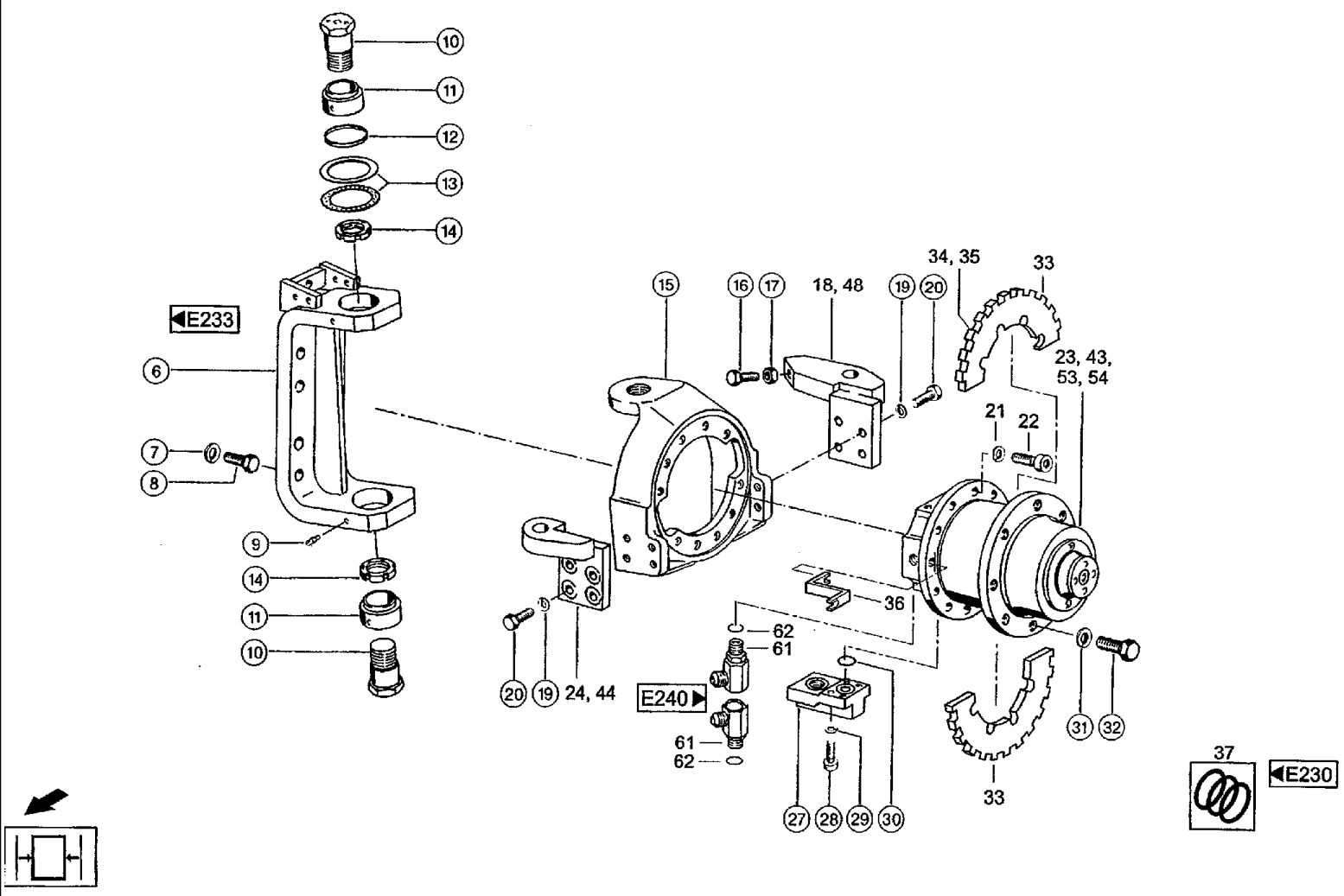

CF80 CASE IH CROSS FLOW COMBINE

E235(01) RUNNING GEAR- HYDROSTATIC DRIVEN REAR AXLE, DRIVING UNIT

Ref	Part Number	Qty	Description
6	649893N0	2	FRAME, Frame
7	060513338	16	WASHER, LOCK, Spring washer CN20
8	614-20060	16	BOLT, Hex, M20 x 60, 8.8, Hex bolt M20x60ISO40178.8
9	236942N0	4	NIPPLE, LUBE, Grease nippel AS6x1 DIN71412
10	649835N0	4	PIN, LARGE, Kingpin
11	649839N0	4	BEARING, Bearing
12	649837N0	2	CENTERING RING, Centring
13	649995N0	4	WASHER, Axial washer
14	060516783	4	SLOTTED NUT, Grooved nut M45x1,5-17H-A3C DIN70852
15	649899N0	2	HOUSING, Steering knuckle housing
16	627-16050	2	BOLT, Hex, M16 x 50, 10.9, Bolt, Hex, M16 x 50, 10.9, ISO4017
17	829-1416	2	NUT, M16, Cl 10, Hex nut M16IS0403210
18	260711N0	1	SUPPORT, Deflecting block I, VORN
19	060516742	12	WASHER, LOCK, Spring washer CN16
20	215352N0	12	SCREW, Hex bolt M16x1,5x45 MK/10.9- ISO8676
21	03266958	20	WASHER, LOCK, Locking ring VSKZ16
22	962-16040	20	SCREW, Hex Soc Hd, M16 x 40, 10.9, Cheese-head screw M16x40DIN91210.9
23	260744N0	1	HUB, Wheel hub unit I
24	260714N0	1	SUPPORT, Deflecting block I, HINTEN
27	649908N1	4	PLATE, Adapter plate
28	962-10030	16	SCREW, Hex Soc Hd, M10 x 30, 10.9, Cheese-head screw M10x30DIN91210.9
29	242763N1	16	RING ASSY., Locking ring VSKZ10
30	211908N0	4	O-RING, 0-ring 25x3,55-N DIN3771
31	006456567	16	WASHER, LOCK, Spring washer C22.5 DIN74361
32	090036N0	16	SCREW, Hex bolt M22x1,5x45/8.8-A3C ISO8676

E235(02) RUNNING GEAR- HYDROSTATIC DRIVEN REAR AXLE, DRIVING UNIT

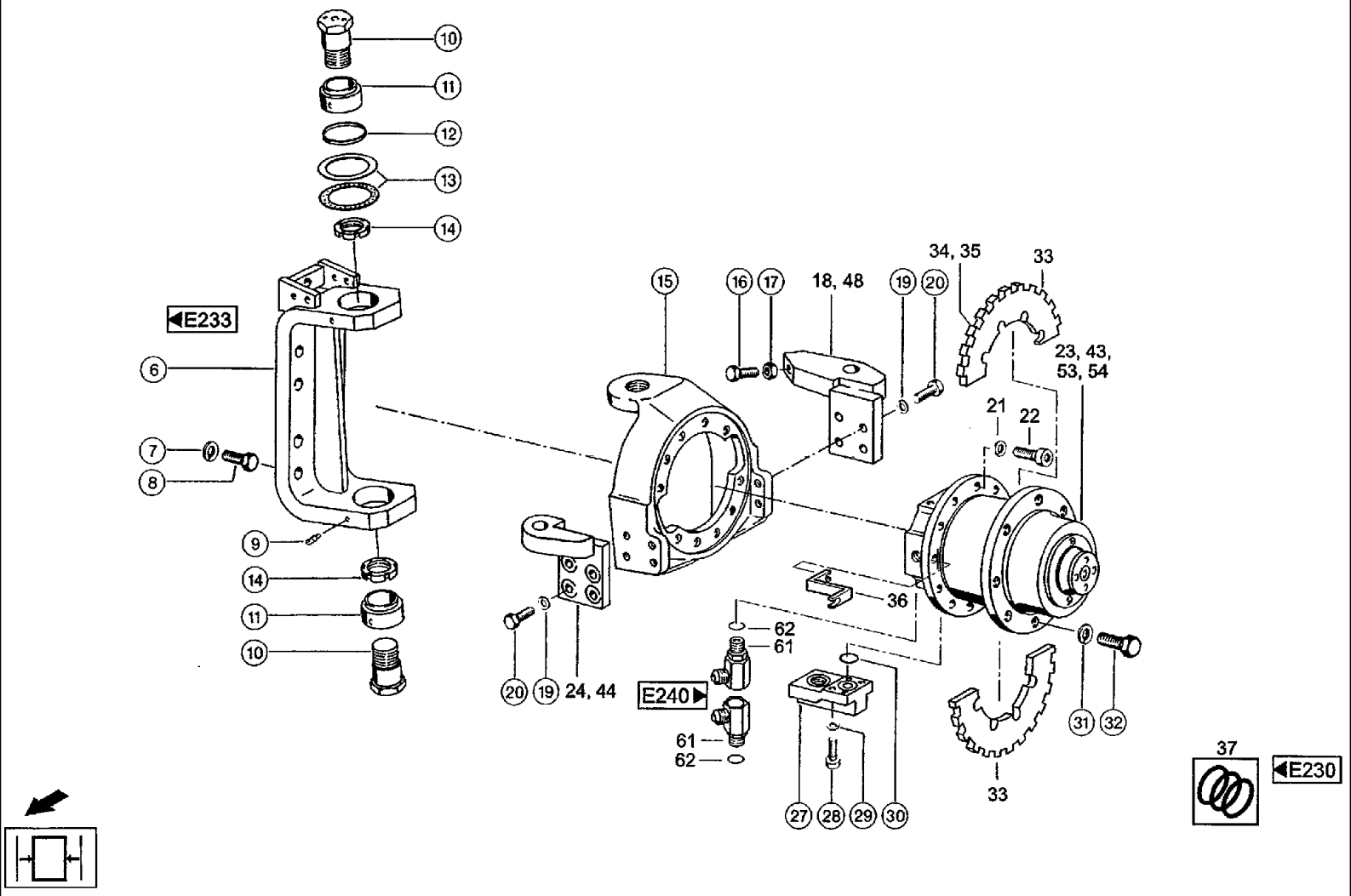

CF80 CASE IH CROSS FLOW COMBINE

E235(02) RUNNING GEAR- HYDROSTATIC DRIVEN REAR AXLE, DRIVING UNIT

Ref	Part Number	Qty	Description
33	260768N0	2	RING, SYNCHRO, Revolving field HALFTE
34	614-6020	4	BOLT, Hex, M6 x 20, 8.8, Hex bolt M6x20ISO40178.8
35	242754N1	4	WASHER, LOCK, Locking ring VSKZ6
36	260771N0	1	SUPPORT, Support
37	649648N0	1	KIT, GASKET, Seal kit
43	649906N1	1	HUB, Wheel hub unit r
44	260653N0	1	SUPPORT, Deflecting block r, HINTEN
48	260713N0	1	SUPPORT, Deflecting block r, VORN
53	694359N0	2	MOTOR, HYDRAULIC, Engine A4F40/35
54	694360N0	2	PLANETARY REDUCER, Crypto gear GFR49E
61	697900N0	2	FITTING, Turning union piece
62	03003262	2	O-RING, O-ring 23,47x2,95-N NBR70

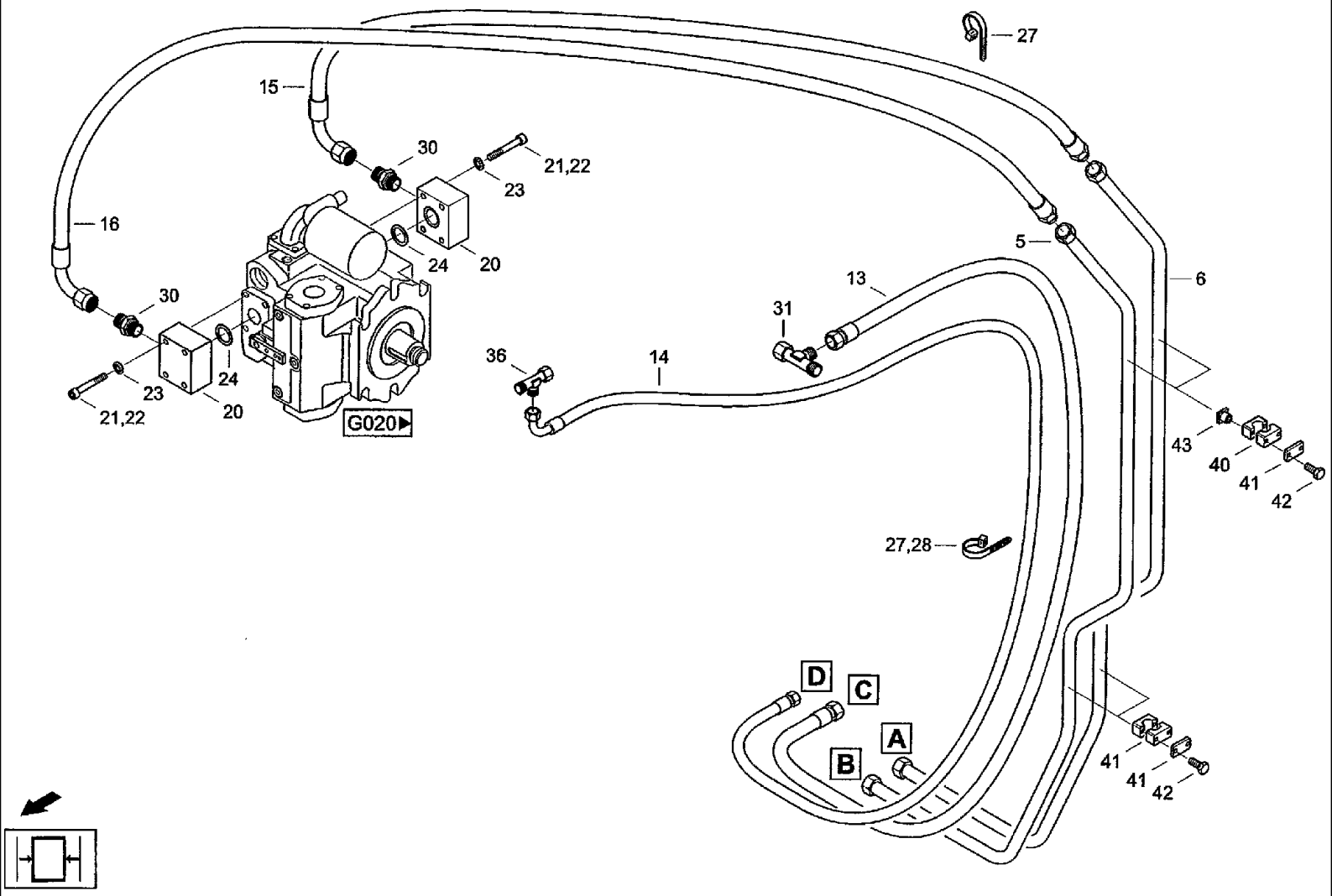
27
15
30
21,22
23
16
24
20
5
6
13
30
31
36
14
24
23
21,22
20
G020
43
40
41
42
27,28
D
C
A
B
41
41
42

CF80 CASE IH CROSS FLOW COMBINE

E240(01) RUNNING GEAR- HYDROSTATIC DRIVEN REAR AXLE, HYDRAULICS

Ref	Part Number	Qty	Description
5	31344647	1	TUBE ASSY., Cpl. pipe 4WD-1
6	31344655	1	TUBE ASSY., Cpl. pipe 4WD-2
10	31344663	2	HOSE, Hose line PHD 520x800 HSA AOS90A
11	31344671	4	HOSE, Hose line PHD 520x1200 AOSA AJ45A SSK
12	31344688	2	HOSE, Hose line 1SN8 DKOL DKOL90- 1800
13	31344696	1	HOSE, Hose line 1SN16DKOLDKOL-3600
14	31344702	1	HOSE, Hose line 1SN8 DKOL DKOL90- 4200
15	31344710	1	HOSE, Hose line PHD 520x1400 HSA AOS90A
16	31344727	1	HOSE, Hose line PHD 520x1600 HSA AOS90A
20	03231843	2	FITTING, Intermediate flange 1 1/4""-25S
21	06310928	2	SCREW, Hex bolt M 14x1 00 ISO4014 10.9
22	06310936	6	SCREW, Cheese-head screw M14x100DIN91210.9
23	97022013	8	SNAP RING, Locking ring VSK14VOSSLOH
24	060516445	2	GASKET, Seal 1 1/4"" PART-NO 4422000 HYTHAN
27	07070992	15	CABLE, Cable band 288x4, 8 TSL-290-S
28	07074658	10	CABLE, Cable band 525x8,8TSL-530HD
30	03437702	2	FITTING, Male connector GEO25-SM/OMD
31	03432546	1	FITTING, Right-angle screwing EL18-L/OMD
32	03436863	2	TUBE, Male connector GE10-L/M18x1,5/ED/OMD/
33	03434355	2	FITTING, Threaded elbow joint EW10-L/OMD
34	03433547	1	FITTING, Threaded elbow joint EW15-L/OMD
35	03437710	1	RESTRICTOR, Adapter flow reduc. RED15/10-L/OMD
36	03435042	1	FITTING, Right-angle screwing EL10-L/OMD
40	06648365	4	SHIN, Clamping halves L-KP-3-R-25DIN3015PP
41	06646347	4	COVER, Cover plate L-DP-3DIN3015W1

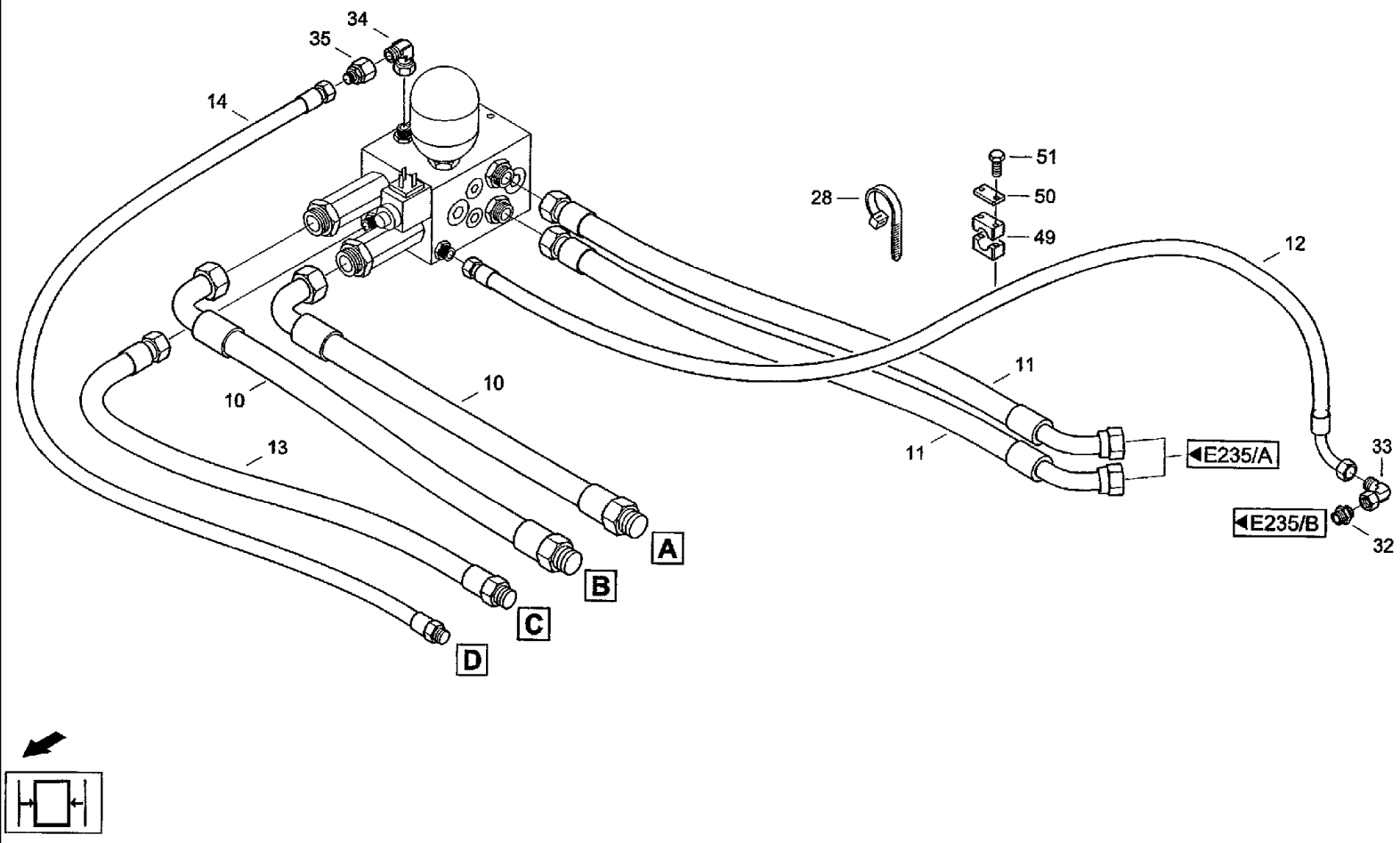
34
35
14
28
51
50
49
12
11
10
10
11
13
E235/A
33
E235/B
32
A
B
C
D

Ref	Part Number	Qty	Description
43	006646138	4	NUT, Nut SM6
49	06647846	2	SHIN, Clamping halves L-KP-2-G-15 DIN3015 PP
50	06647540	2	COVER, Cover plate L-DP-2DIN3015W1
51	814-6035	4	BOLT, Hex, M6 x 35, 8.8, Bolt, Hex, M6 x 35, 8.8, ISO 4014
42	814-6040	8	BOLT, Hex, M6 x 40, 8.8, Hex, M6 x 40, 8.8, ISO4014

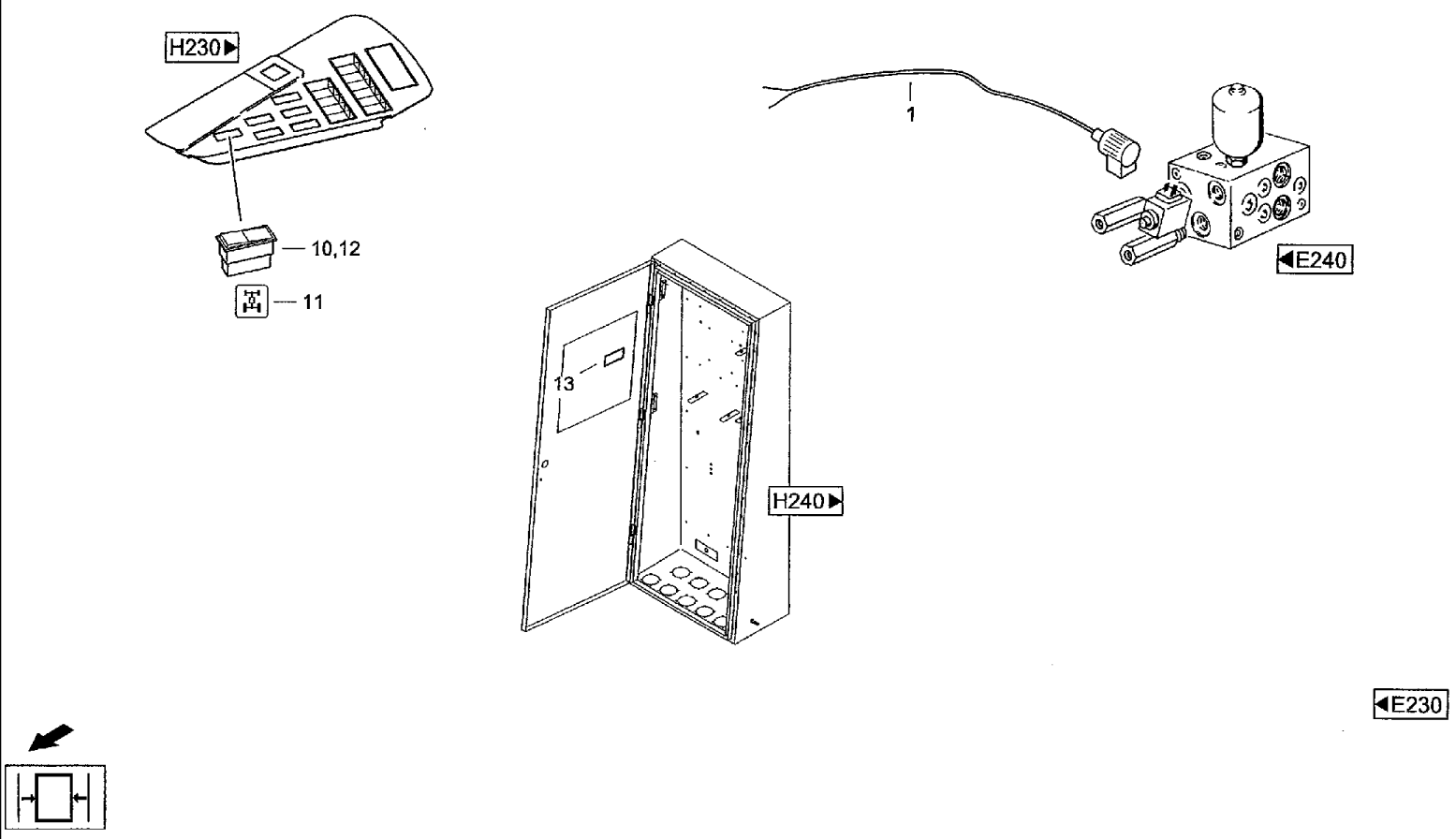
H230
10,12
11
1
E240
13
H240
E230

CF80 CASE IH CROSS FLOW COMBINE

E250 RUNNING GEAR- HYDROSTATIC DRIVEN REAR AXLE, ELECTRICAL EQUIPMENT

Ref	Part Number	Qty	Description
1	31346528	1	HARNESS, Line VENTIL-4WD
10	04120445	1	SWITCH, Rocker switch
11	060526221	1	NO DESCRIPTION, Switch insert
12	07071390	1	BOX, TERMINAL, Base housing 8JA71363100
13	31346536	1	DECAL, Decal 4WD

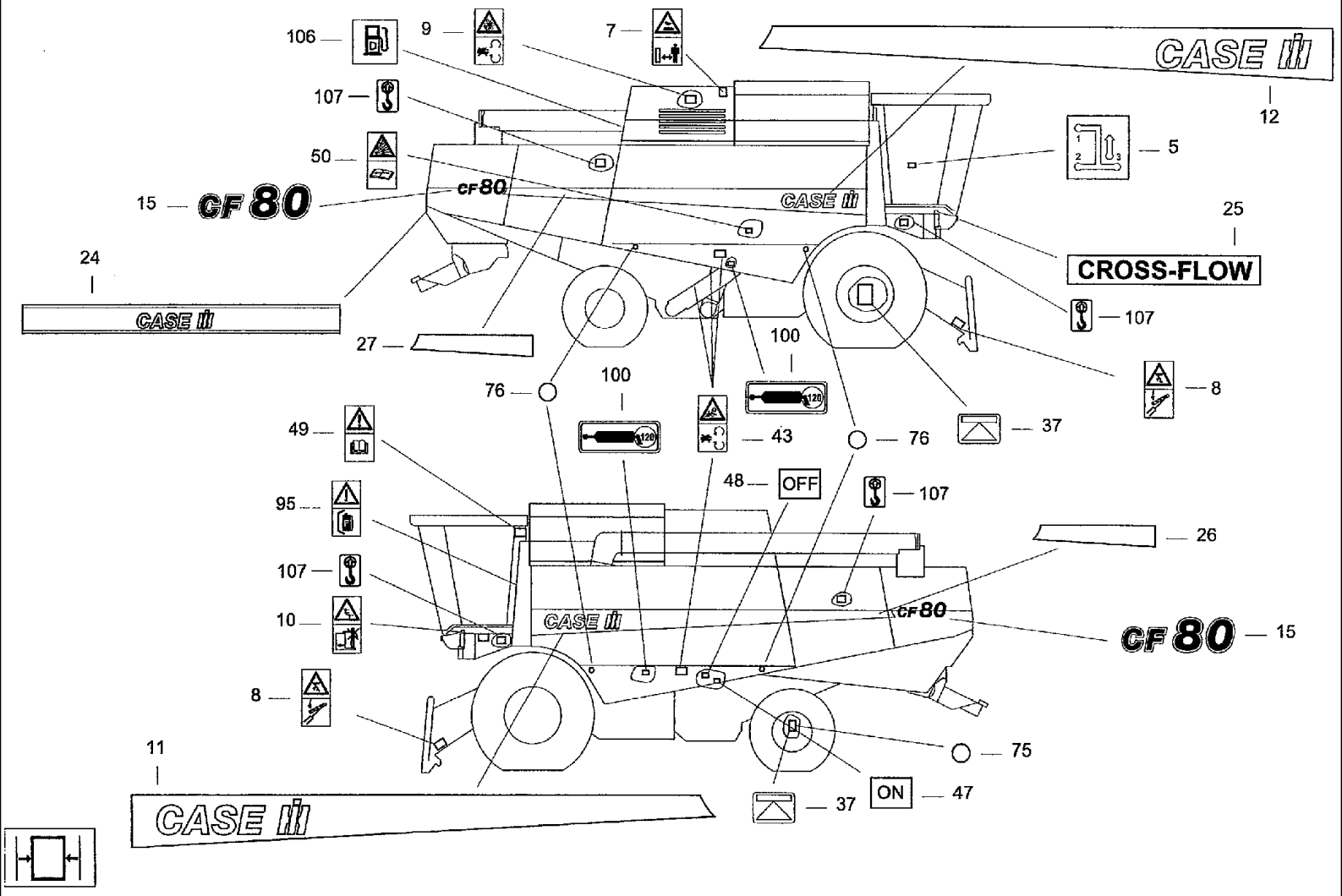
106
9
7
107
50
15
CF 80
CF80
CASE IH
CASE IH
12
5
25
CROSS-FLOW
24
CASE IH
27
107
100
76
100
8
49
43
76
37
48
OFF
107
95
26
107
CF80
CF 80
15
10
CASE IH
8
75
11
CASE IH
37
ON
47

CF80 CASE IH CROSS FLOW COMBINE

E260 RUNNING GEAR- PRODUCT LABELS

Ref	Part Number	Qty	Description
5	31296613	1	DECAL, Plate GANGSCHALTUNG
7	31334477	1	DECAL, Symbol NR.41
8	060508381	2	PRODUCT GRAPHIC, Symbol NR.11
9	060510511	1	DECAL, Symbol NR.16
10	060508404	1	DECAL, Symbol NR.37
11	31314336	1	DECAL, Logo l, Case Ih
12	31315884	1	DECAL, Logo r, Case Ih
15	31305778	2	DECAL, Logo Cf80
24	09169750	1	DECAL, Type label LOGO-CASE 600/1 37
25	31311052	1	DECAL, Logo Cross-Flow
26	31315907	1	DECAL, Trim l
27	31315892	1	DECAL, Trim r, BEST.-ZEI.
37	009114536	4	DECAL, Sliding shield DH
43	060506652	4	DECAL, Symbol NR.21
47	060000114	1	DECAL, Decal -ON-
48	060000122	1	DECAL, Decal -OFF-
49	060506660	1	DECAL, Symbol NR.1
50	09168196	1	DECAL, Symbol NR.42
75	060527271	2	REFLECTOR, Reflector rd, rt
76	004022512	4	REFLECTOR, Reflector rd, ge, D=60
95	09168210	1	DECAL, Symbol NR.57
100	31299431	2	DECAL, Symbol FETTPRESSE
106	31345182	1	DECAL, Fuel indicator
107	31345174	4	DECAL, Hitch point

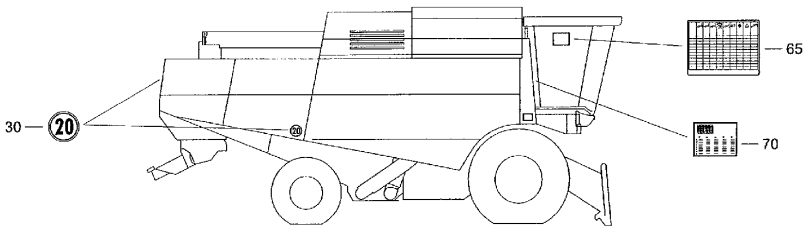
65
30
20
70

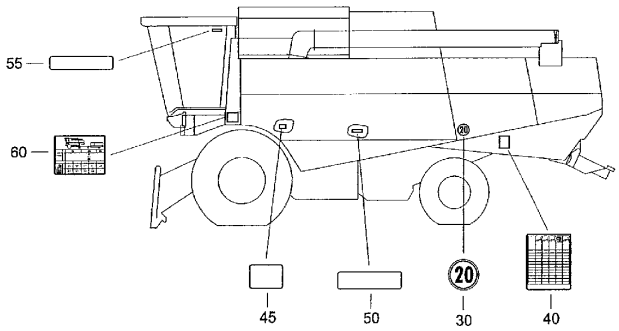
55
60
45
50
20
30
40

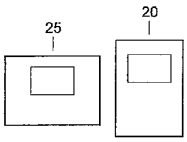
25
20



CF80 CASE IH CROSS FLOW COMBINE

E261(01) COUNTRY- SPECIFIC VARIANT- GREAT BRITAIN [CF80K]

Ref	Part Number	Qty	Description
20	02931677	1	INSTRUCTION, Operator's manual CF80 3.AUSG/01
25	02931636	1	CATALOG, Parts catalogue CF80 4.AUSG/01
30	09164207	3	PLATE, LARGE, Speed label 20KIWH 200-D
40	31310976	1	ADHESIVE, Setting chart
45	31310340	1	ADHESIVE, Signboard
50	31310381	1	ADHESIVE, Signboard
55	31310365	1	ADHESIVE, Decal
60	31344382	1	PRODUCT GRAPHIC, Tyre pressure
65	31310968	1	ADHESIVE, Setting chart
70	31352093	1	ADHESIVE, Decal GB

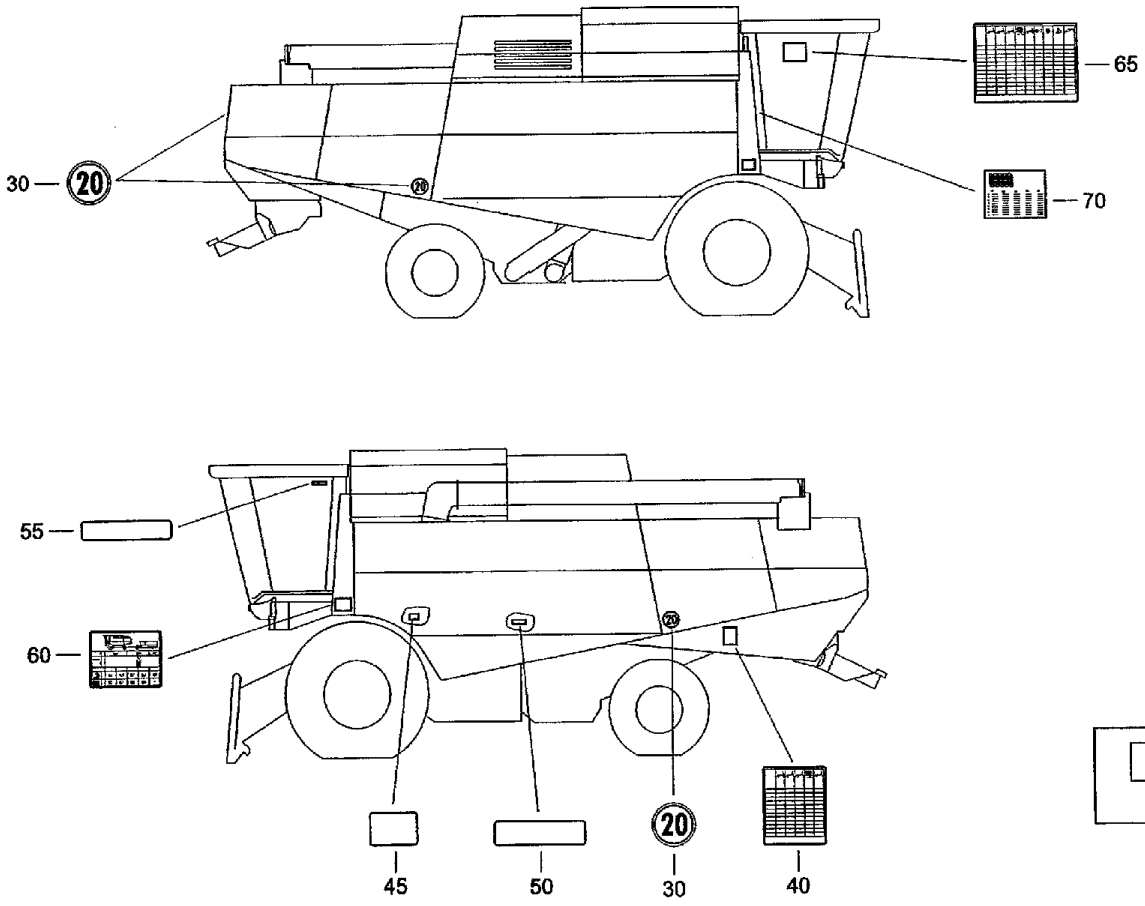
65
30
20
70
55
60
45
50
20
30
40
25
20

CF80 CASE IH CROSS FLOW COMBINE

E261(02) COUNTRY- SPECIFIC VARIANT- GREAT BRITAIN [CF80K]

Ref	Part Number	Qty	Description
20	02931677	1	INSTRUCTION, Operator's manual CF80 3.AUSG/01
25	02931636	1	CATALOG, Parts catalogue CF80 4.AUSG/01
30	09164207	3	PLATE, LARGE, Speed label 20KM/H 200-D
40	31310976	1	ADHESIVE, Setting chart
45	31310340	1	ADHESIVE, Signboard
50	31310381	1	ADHESIVE, Signboard
55	31310365	1	ADHESIVE, Decal
60	31344382	1	PRODUCT GRAPHIC, Tyre pressure
65	31310968	1	ADHESIVE, Setting chart
70	31352093	1	ADHESIVE, Decal GB

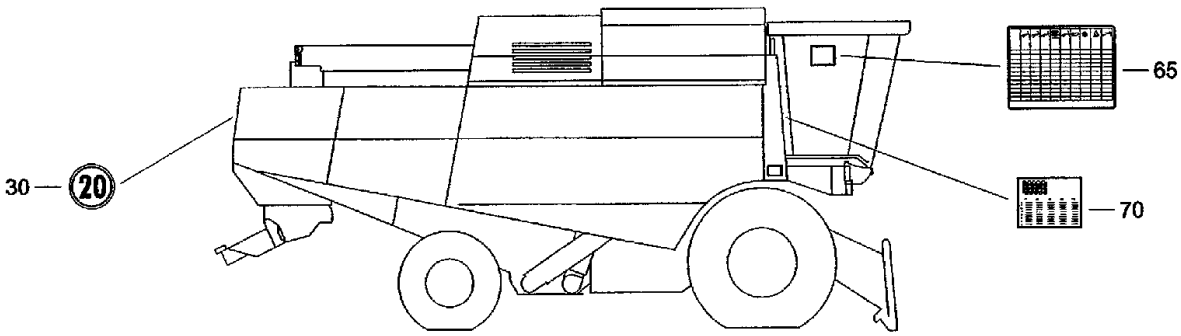
30
20
65
70

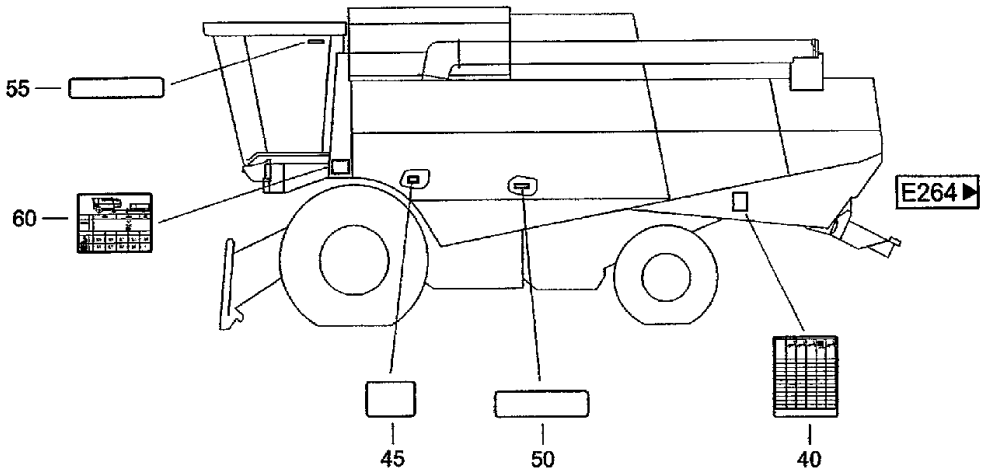
55
60
E264
45
50
40

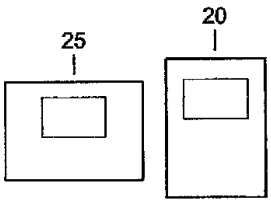
25
20

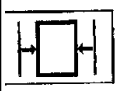

CF80 CASE IH CROSS FLOW COMBINE

E263(01) COUNTRY- SPECIFIC VARIANT- FRANCE [1- CF80K]

Ref	Part Number	Qty	Description
20	02931685	1	INSTRUCTION, Operator's manual CF80 3.AUSG/01
25	02931636	1	CATALOG, Parts catalogue CF80 4.AUSG/01
30	09169654	1	DECAL, Speed label 25KM/H 200-F
40	31310992	1	ADHESIVE, Setting chart
45	31310357	1	ADHESIVE, Signboard
50	31310398	1	ADHESIVE, Signboard
55	31310373	1	ADHESIVE, Decal
60	31344382	1	PRODUCT GRAPHIC, Tyre pressure
65	31310984	1	ADHESIVE, Setting chart
70	31352108	1	ADHESIVE, Decal FRA

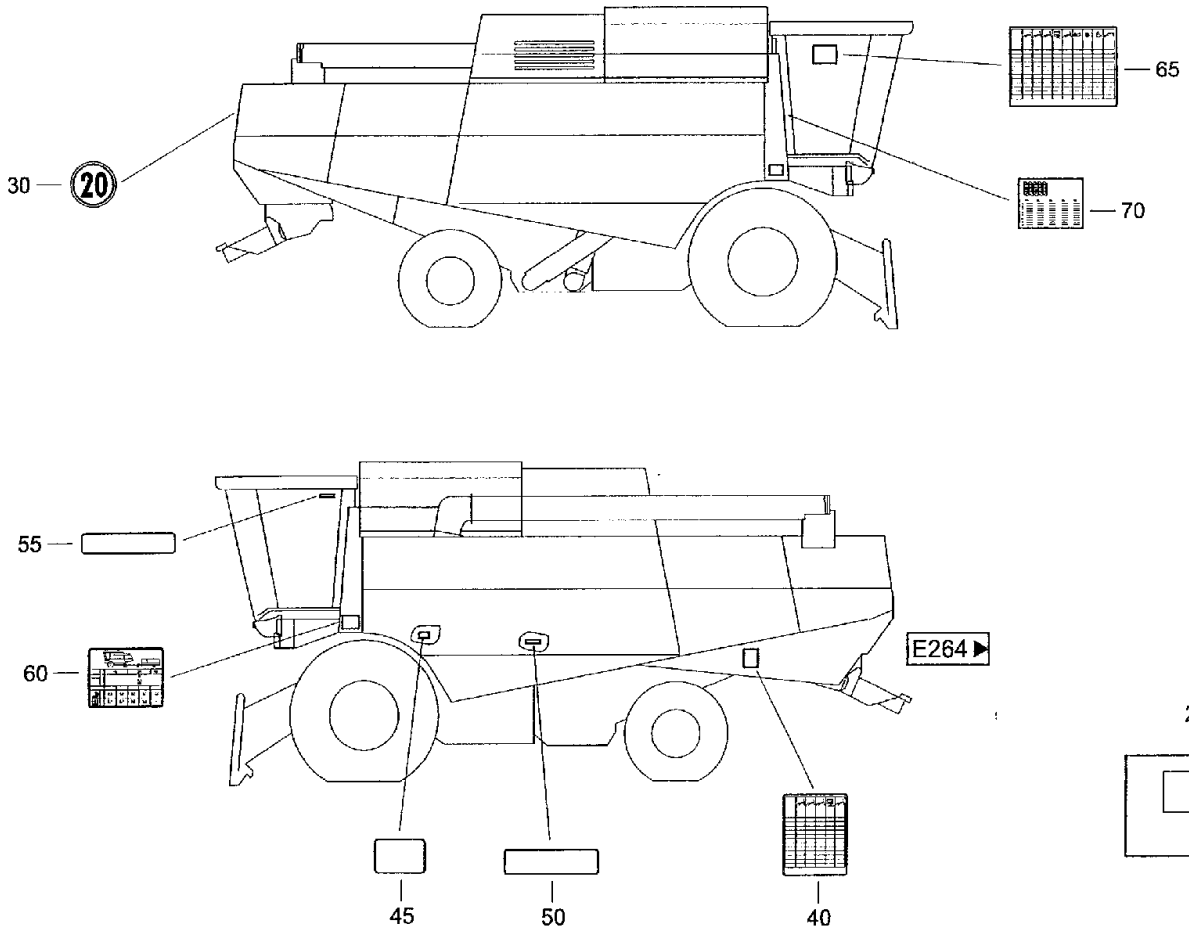
30
20
65
70
55
60
E264 ▶
45
50
40
25
20

CF80 CASE IH CROSS FLOW COMBINE

E263(02) COUNTRY- SPECIFIC VARIANT- FRANCE [1]

Ref	Part Number	Qty	Description
20	02931685	1	INSTRUCTION, Operator's manual CF80 3.AUSG/01
25	02931636	1	CATALOG, Parts catalogue CF80 4.AUSG/01
30	09169654	1	DECAL, Speed label 25KM/H 200-F
40	31310992	1	ADHESIVE, Setting chart
45	31310357	1	ADHESIVE, Signboard
50	31310398	1	ADHESIVE, Signboard
55	31310373	1	ADHESIVE, Decal
60	31344382	1	PRODUCT GRAPHIC, Tyre pressure
65	31310984	1	ADHESIVE, Setting chart
70	31340965	1	PRODUCT GRAPHIC, Decal FRA

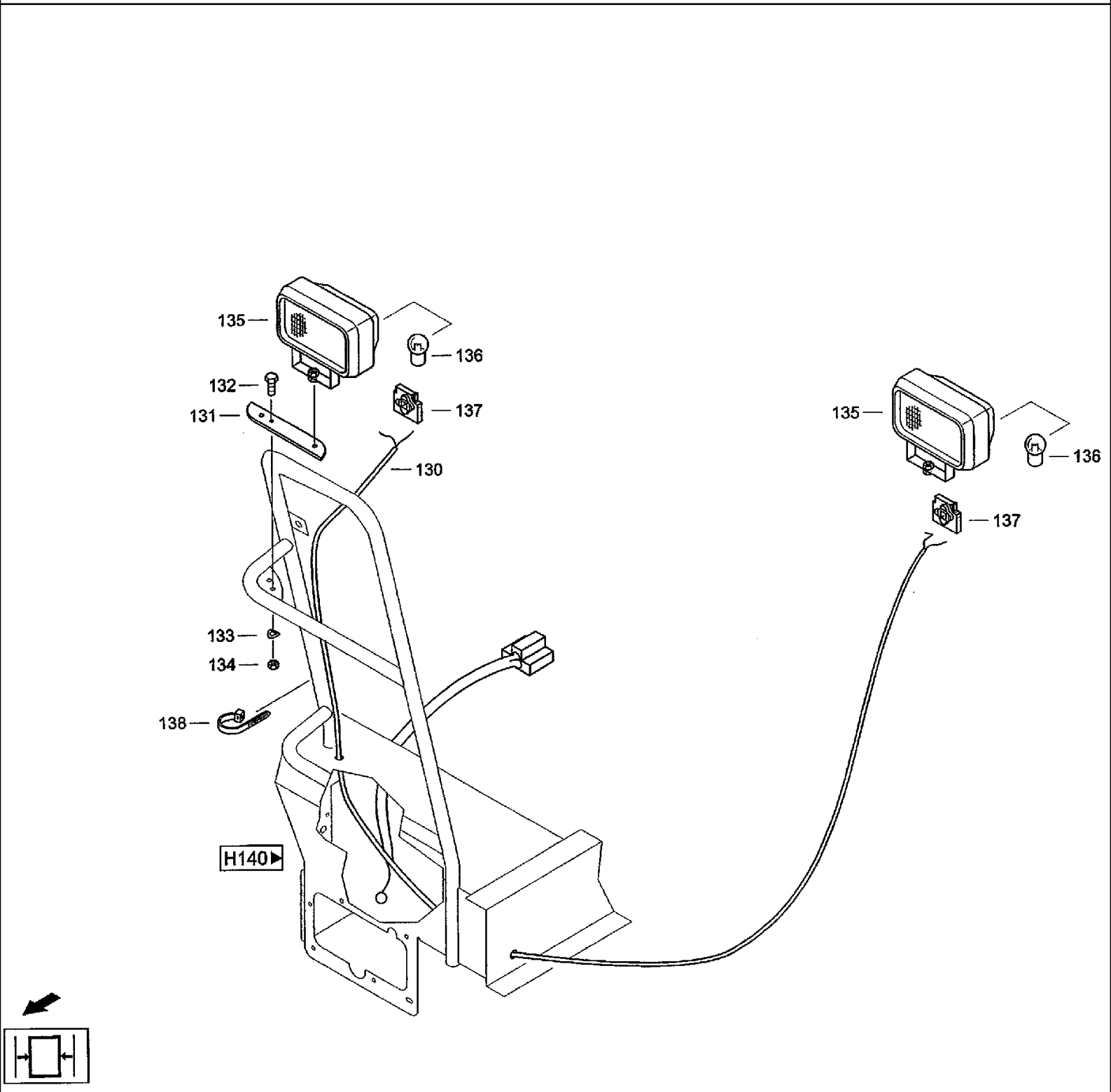
135
136
132
131
137
130
135
136
137
133
134
138
H140

CF80 CASE IH CROSS FLOW COMBINE

E264(01) COUNTRY- SPECIFIC VARIANT- FRANCE [2]

Ref	Part Number	Qty	Description
101	061052815	1	PLATE, Plate
102	020948185	1	ADHESIVE, Plate
103	07067747	1	LAMP, Number-plate lamp
105	061052807	1	CABLE ASSY., Cable
108	06001860	4	SCREW, Cheese-head screw M4x12DIN844.8
109	825-1404	4	NUT, M4, Cl 8,
110	06501268	4	WASHER, SPRING, Wave washer spring B4 DIN137 FST
111	07067683	1	BULB, Filament lamp R10W-12V VPE10STK DIN72601
112	007067056	3	CLIP, CABLE, Cable band PLT-1,5I-30
113	614-6016	3	BOLT, Hex, M6 x 16, 8.8,
114	825-1406	3	NUT, M6, Cl 8,
115	895-25006	3	WASHER, M6 x 18 x 1.6, Washer 6,4 DIN9021
116	06501397	3	WASHER, SPRING, Wave washer spring B6 DIN137 FST
117	07066578	2	CABLE SHEATH., Flag receptacle 6,3-2,5-BZ-RZ DIN46340
118	061053004	2	PROTECTOR, Protective hose
120	006002740	2	SCREW, Cheese-head screw M5X12DIN844.8
121	825-1405	2	NUT, M5, Cl 8, Hex nut M5 ISO4032 8
122	06501315	2	WASHER, SPRING, Wave washer spring B5DIN137FST
130	31346472	1	CABLE ASSY., Cable ZUSATZSCHEINWERFER
131	31346480	1	SUPPORT, Extension
132	614-8012	1	SCREW, Hex, M8 x 12, 8.8, Full Thd, Hex bolt M8X12ISO40178.8
133	06577028	1	WASHER, SPECIAL, Locking washer M8
134	825-1408	1	NUT, M8, Cl 8,
135	07076571	2	SPOTLIGHT, Build-up headlight
136	07073874	2	BULB, Filament lamp H412V60/55WDIN72601

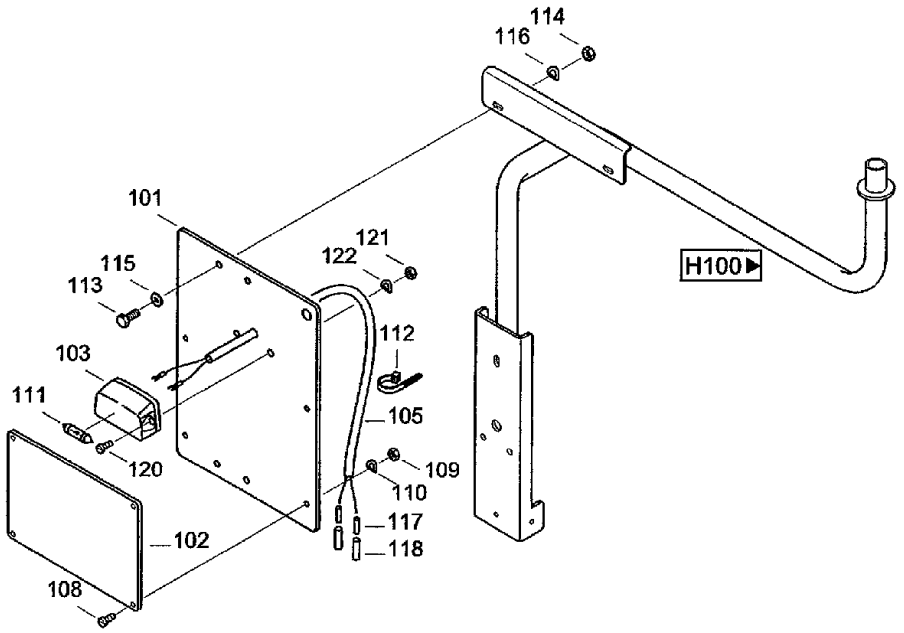
114
116
101
121
122
115
113
H100
112
103
111
105
120
109
110
117
102
118
108

E263

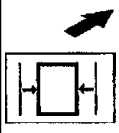

CF80 CASE IH CROSS FLOW COMBINE

E264(02) COUNTRY- SPECIFIC VARIANT- FRANCE [2]

Ref	Part Number	Qty	Description
137	060508992	2	CONNECTOR, Connector dreipolig
138	07070043	8	CABLE, Cable band 250x4,8 TSL-250-S

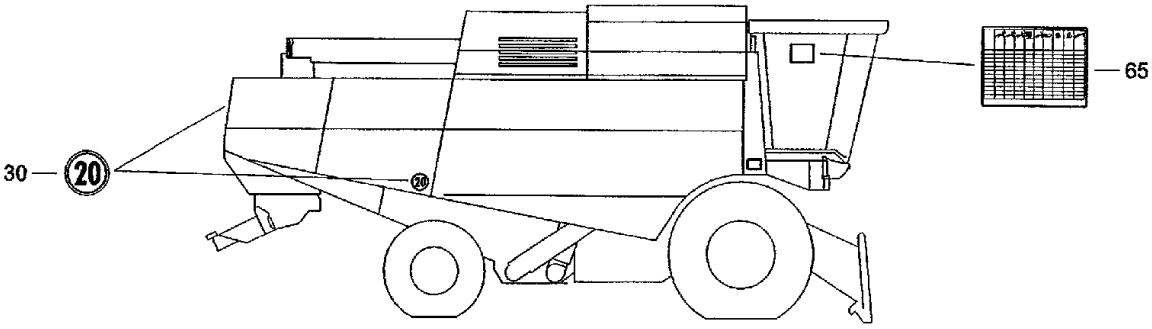
65
30
20

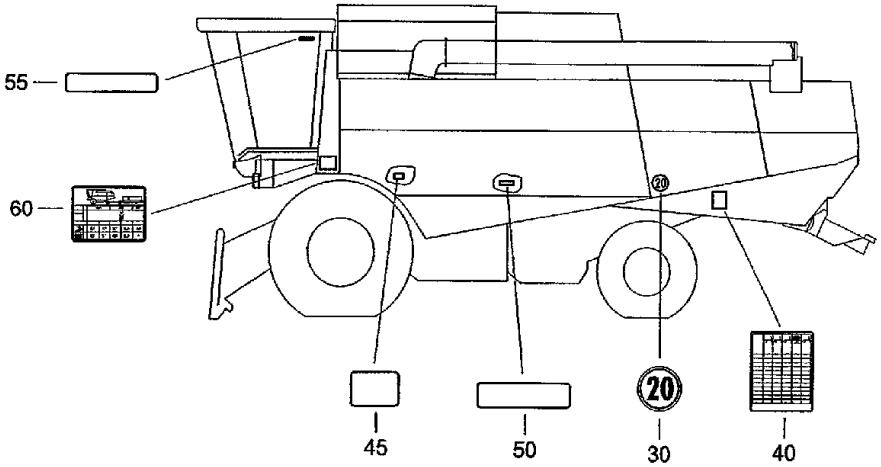
55
60
45
50
20
30
40

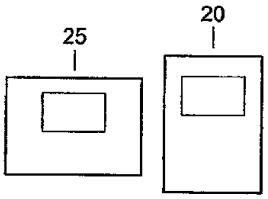
25
20

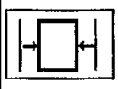

CF80 CASE IH CROSS FLOW COMBINE

E265 COUNTRY- SPECIFIC VARIANT- GERMANY

Ref	Part Number	Qty	Description
20	2931660	1	Operator's manual CF80 3.AUSG/01
25	02931636	1	CATALOG, Parts catalogue CF80 4.AUSG/01
30	09164207	3	PLATE, LARGE, Speed label 20KM/H 200-D
40	061031320	1	ADHESIVE, Setting chart SIEBE
45	061052366	1	ADHESIVE, Signboard
50	060168394	1	ADHESIVE, Signboard
55	020947705	1	PRODUCT GRAPHIC, Decal MOTOR-ABSCHALTEN
60	31344382	1	PRODUCT GRAPHIC, Tyre pressure
65	09169566	1	ADHESIVE, Plate EINSTELLTABELLE

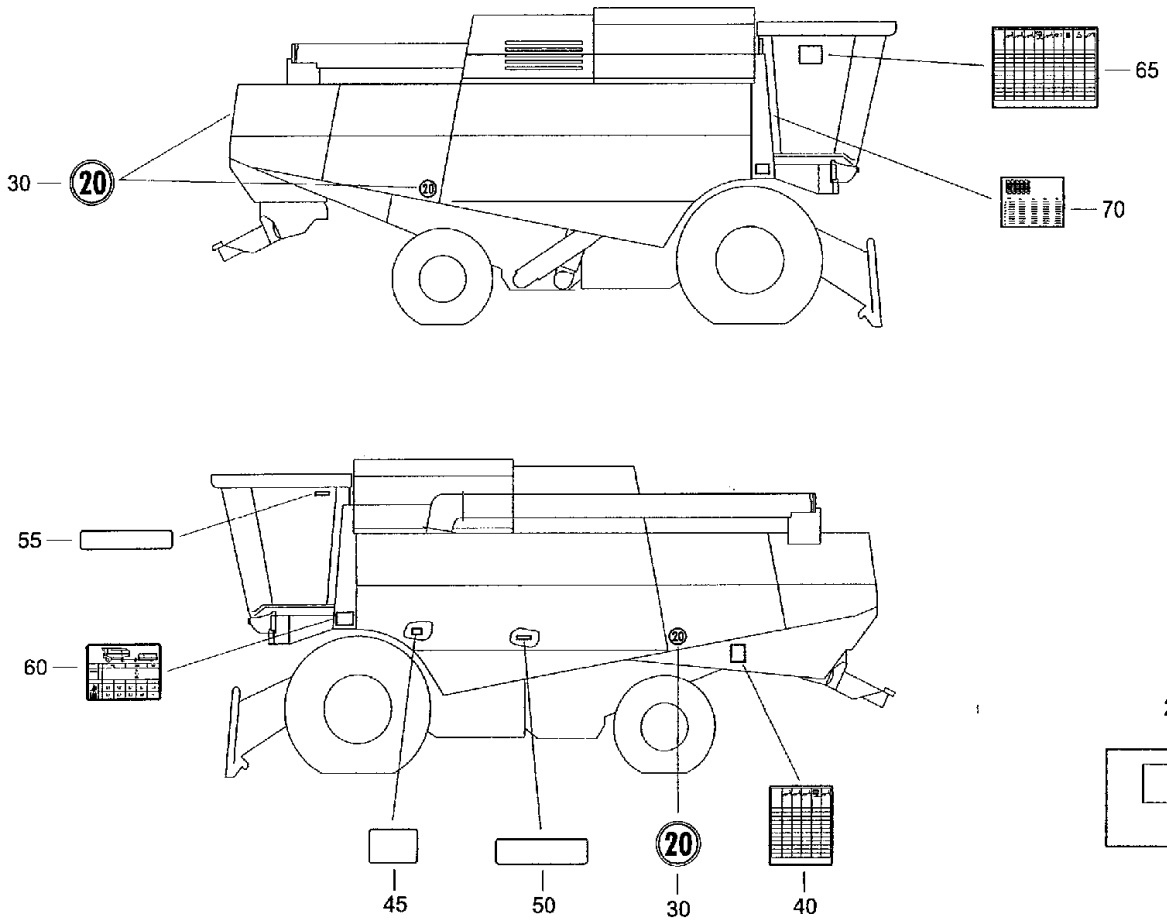
65
30
20
70
55
60
45
50
20
30
40
25
20

CF80 CASE IH CROSS FLOW COMBINE

E267(01) COUNTRY- SPECIFIC VARIANT- RUSSIA

Ref	Part Number	Qty	Description
20	02931693	1	INSTRUCTION, Operator's manual CF80 3.AUSG/01
25	31348128	1	CATALOG, Parts catalogue CF80 4.AUSG/01
30	09164207	3	PLATE, LARGE, Speed label 20KM/H 200-D
40	31327260	1	DECAL, Setting chart SIEBE
45	31327252	1	DECAL, Signboard
50	060200283	1	DECAL, Signboard RUSSISCH
55	060199624	1	DECAL, Decal MOTOR-ABSCHALTEN RUSSISCH
60	31344382	1	PRODUCT GRAPHIC, Tyre pressure
65	31327277	1	DECAL, Plate EINSTELLTABELLE
70	31346464	1	PRODUCT GRAPHIC, Decal RUS

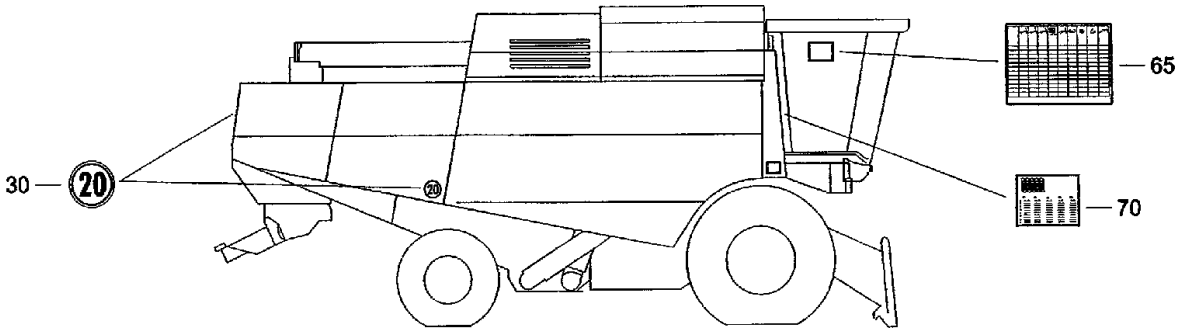
30
20
65
70

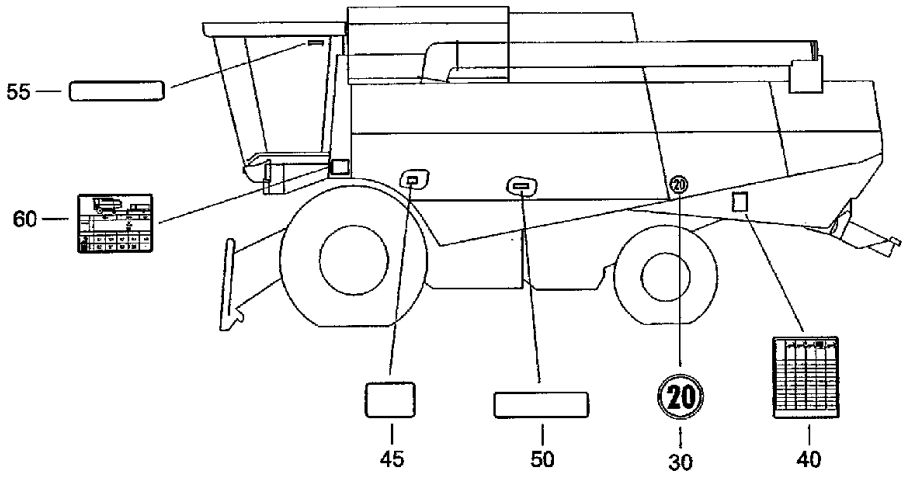
55
60
45
50
20
30
40

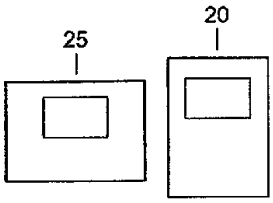
25
20

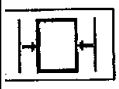

CF80 CASE IH CROSS FLOW COMBINE

E267(02) COUNTRY- SPECIFIC VARIANT- RUSSIA [CF80K]

Ref	Part Number	Qty	Description
20	02931693	1	INSTRUCTION, Operator's manual CF80 3.AUSG/01
25	31348128	1	CATALOG, Parts catalogue CF80 4.AUSG/01
30	09164207	3	PLATE, LARGE, Speed label 20KM/H 200-D
40	31327260	1	DECAL, Setting chart SIEBE
45	31327252	1	DECAL, Signboard
50	060200283	1	DECAL, Signboard RUSSISCH
55	060199624	1	DECAL, Decal MOTOR ABSCHALTEN RUSSISCH
60	31344382	1	PRODUCT GRAPHIC, Tyre pressure
65	31327277	1	DECAL, Plate EINSTELLTABELLE
70	31352960	1	DECAL, Decal RUS

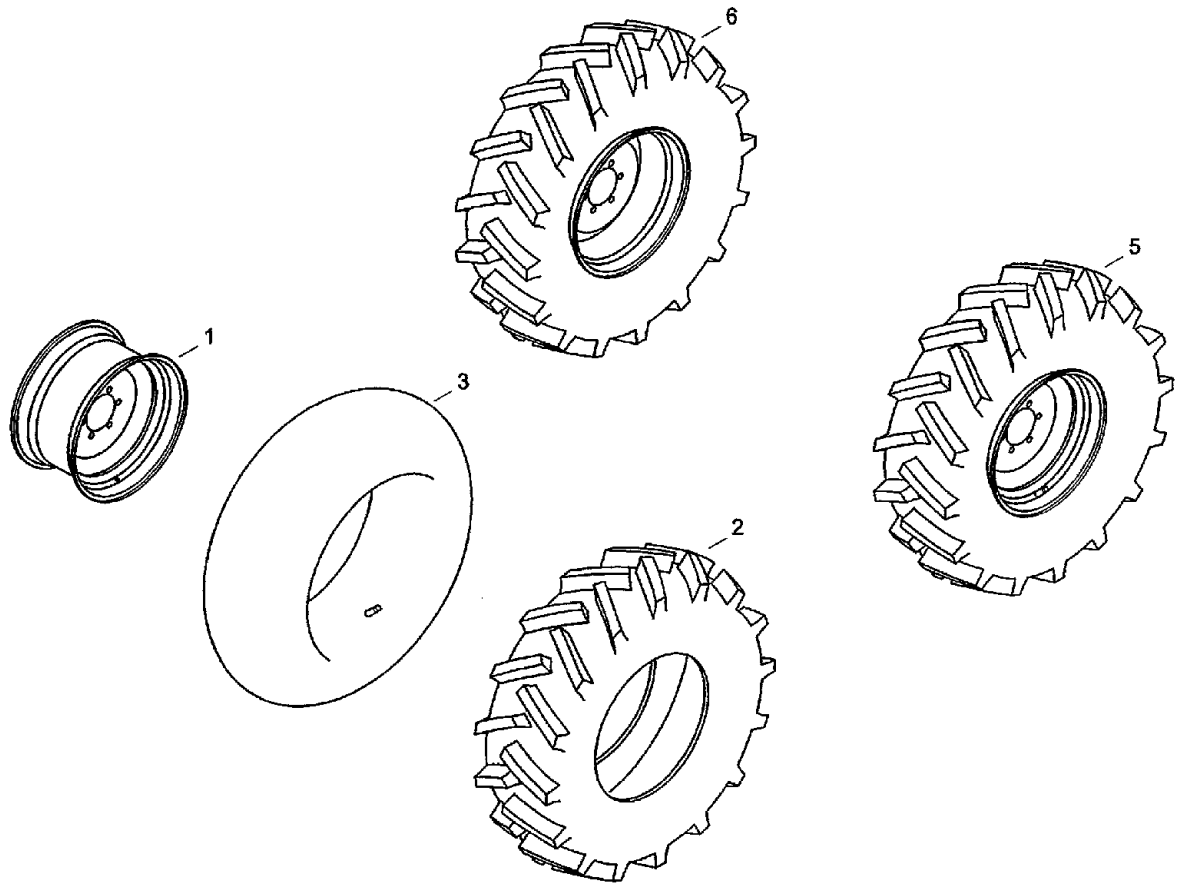
6
1
5
3
2
E090

CF80 CASE IH CROSS FLOW COMBINE

E280 TIRES- STEERING AXLE [460/70-R24]

Ref	Part Number	Qty	Description
1	31320631	2	RIM, Web disk wheel 14x24/6/205/ET-50
2	31345094	2	TIRE, RUBBER, Tyre 460/70R24-150A8AS
3	01402688	2	AIR TUBE, Air tube 16.9R24 F.REIFEN 0682386
5	31332723	1	WHEEL ASSY., Wheel l, 460/70-R24-150A8 AS FELGE W
6	31332731	1	WHEEL ASSY., Wheel r, 460/70-R24-150A8 AS FELGE W

E281 TIRES- STEERING AXLE [500/70-R24]

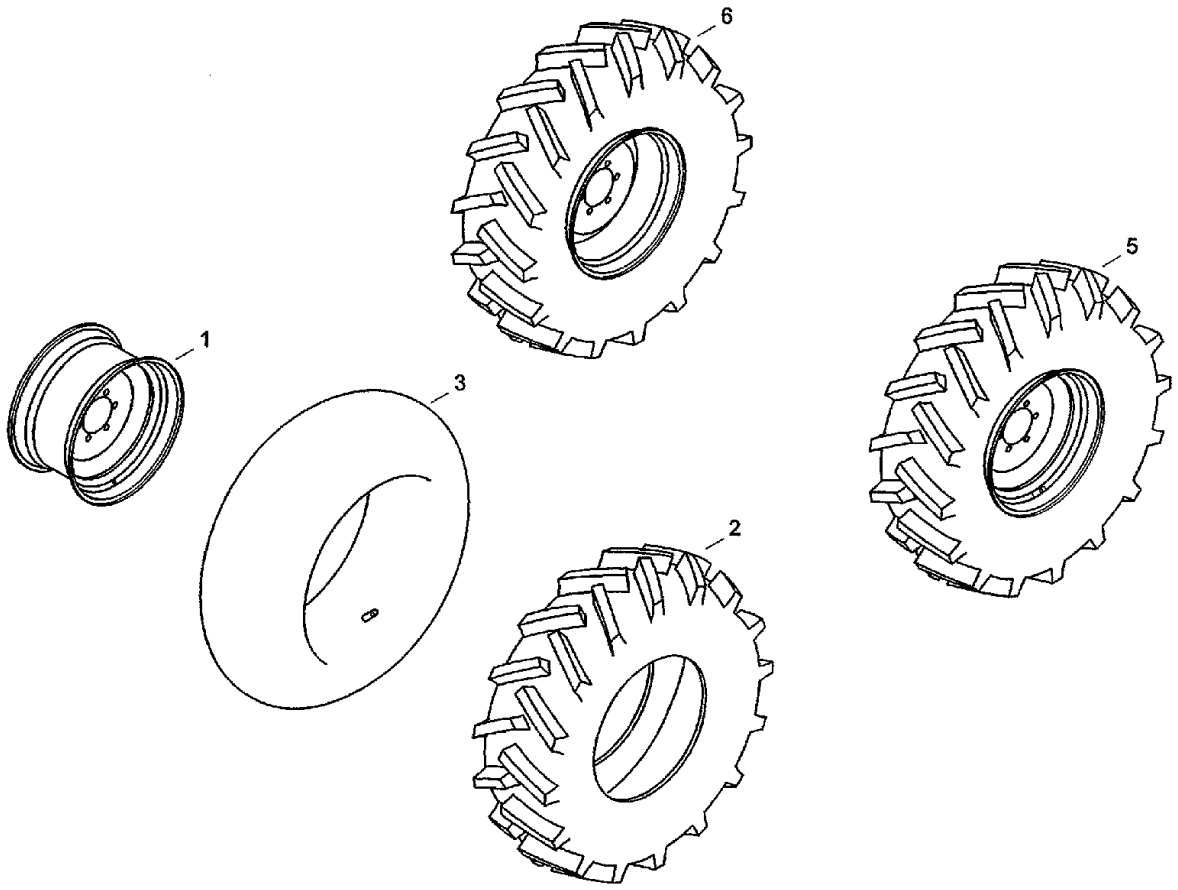

E090

CF80 CASE IH CROSS FLOW COMBINE

E281 TIRES- STEERING AXLE [500/70-R24]

Ref	Part Number	Qty	Description
1	061073885	2	RIM, Web disk wheel W16Lx24/205/6/ET-50
2	31345078	2	TIRE, RUBBER, Tyre 500/70R24-150A8AS
3	31345086	2	AIR TUBE, Air tube 19.5-LR24
5	31342934	1	WHEEL ASSY., Wheel l, 500/70-R24 150A8 AS FELGE W
6	31342942	1	WHEEL ASSY., Wheel r, 500/70-R24 150A8 AS FELGE W

E282 TIRES- STEERING AXLE [480/70-R24]

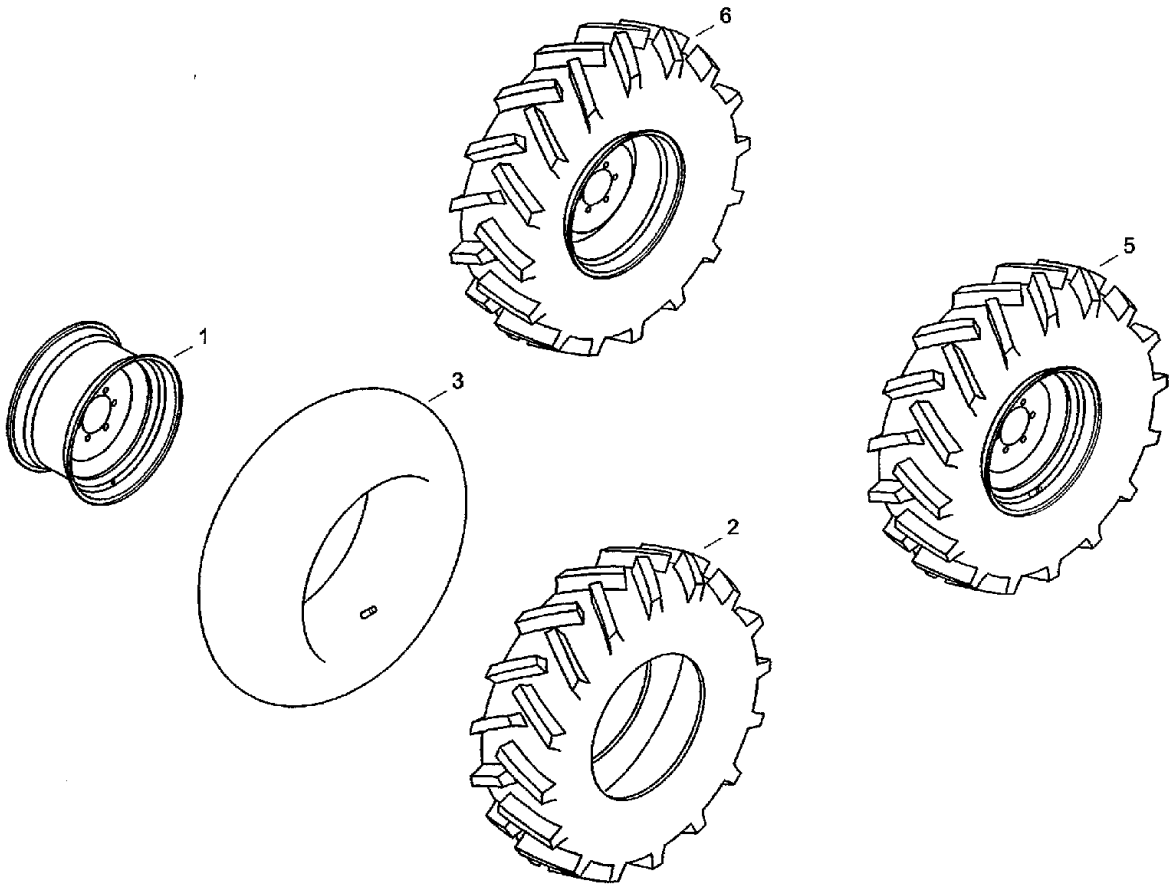

CF80 CASE IH CROSS FLOW COMBINE

E282 TIRES- STEERING AXLE [480/70-R24]

Ref	Part Number	Qty	Description
1	31320631	2	RIM, Web disk wheel 14X24/6/205/ET-50
2	060533671	2	TIRE, RUBBER, Tyre 480/70-R24-138A8AS
3	01402688	2	AIR TUBE, Air tube 16.9R24 F.REIFEN 0682386
5	061073877	1	WHEEL ASSY., Wheel l, 480/70-R24-138A8 AS FELGE W
6	061073893	1	WHEEL ASSY., Wheel r, 480/70-R24-138A8 AS FELGE W

E290 TIRES- HYDROSTATIC DRIVEN REAR AXLE [540/65-R24]

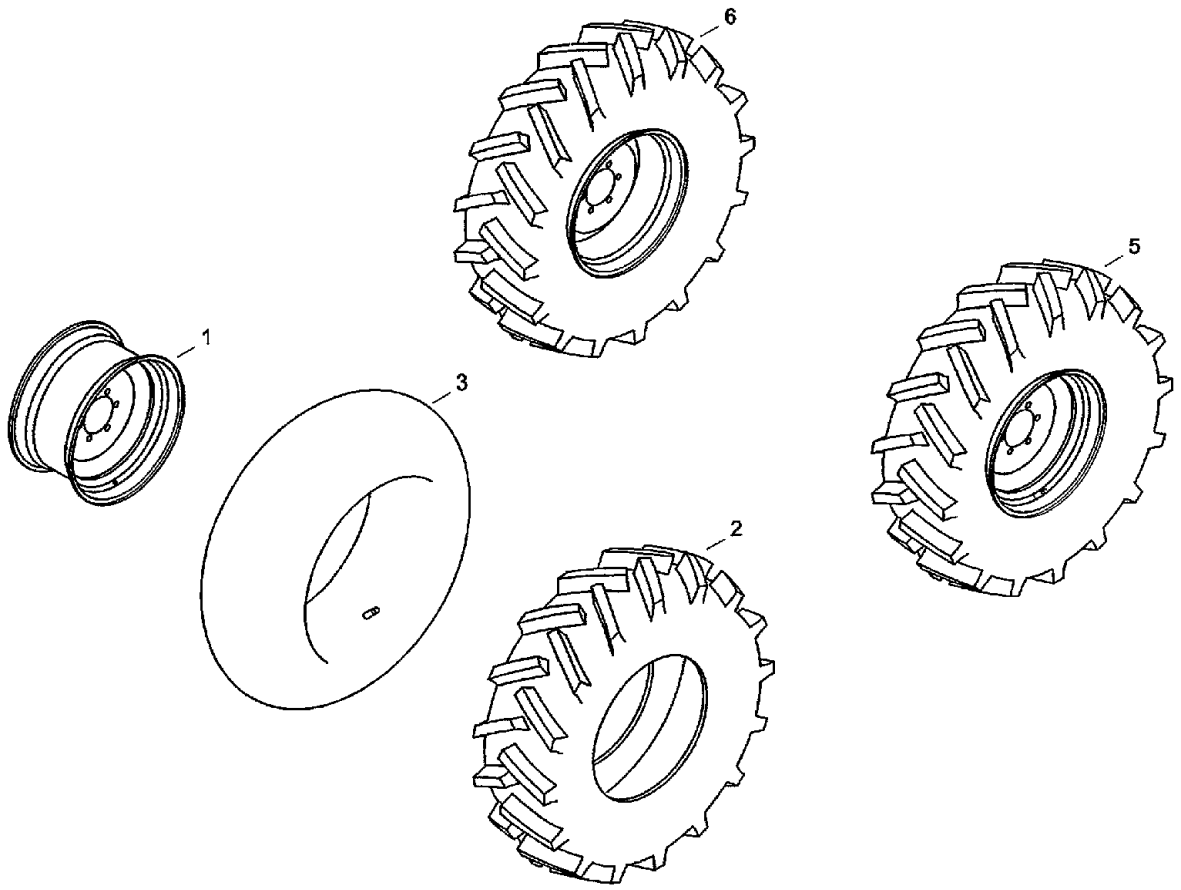

E230

CF80 CASE IH CROSS FLOW COMBINE

E290 TIRES- HYDROSTATIC DRIVEN REAR AXLE [540/65-R24]

Ref	Part Number	Qty	Description

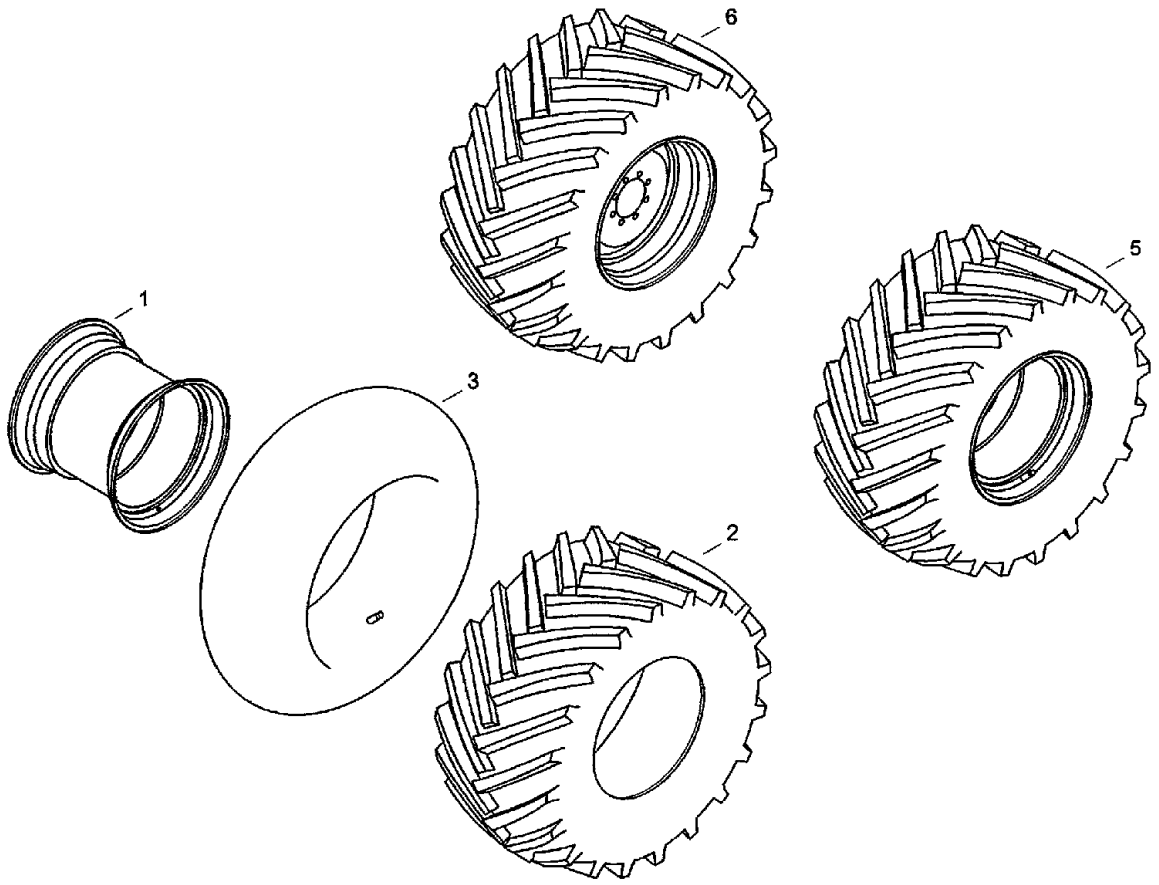

E180

CF80 CASE IH CROSS FLOW COMBINE

E300 TIRES- DRIVING SHAFT [650/75-R32]

Ref	Part Number	Qty	Description
1	061067565	2	RIM, Web disk wheel DW21x32/275/8/ET60
2	060533622	2	TIRE, RUBBER, Tyre 650/75R32-167A8AS
3	060520755	2	AIR TUBE, Air tube 24.5-32
5	061067557	1	WHEEL, Driving wheel l, 24.5R32-167A8AS FELGE DW21X
6	061067573	1	WHEEL, Driving wheel r, 24.5R32-167A8AS FELGE DW21X

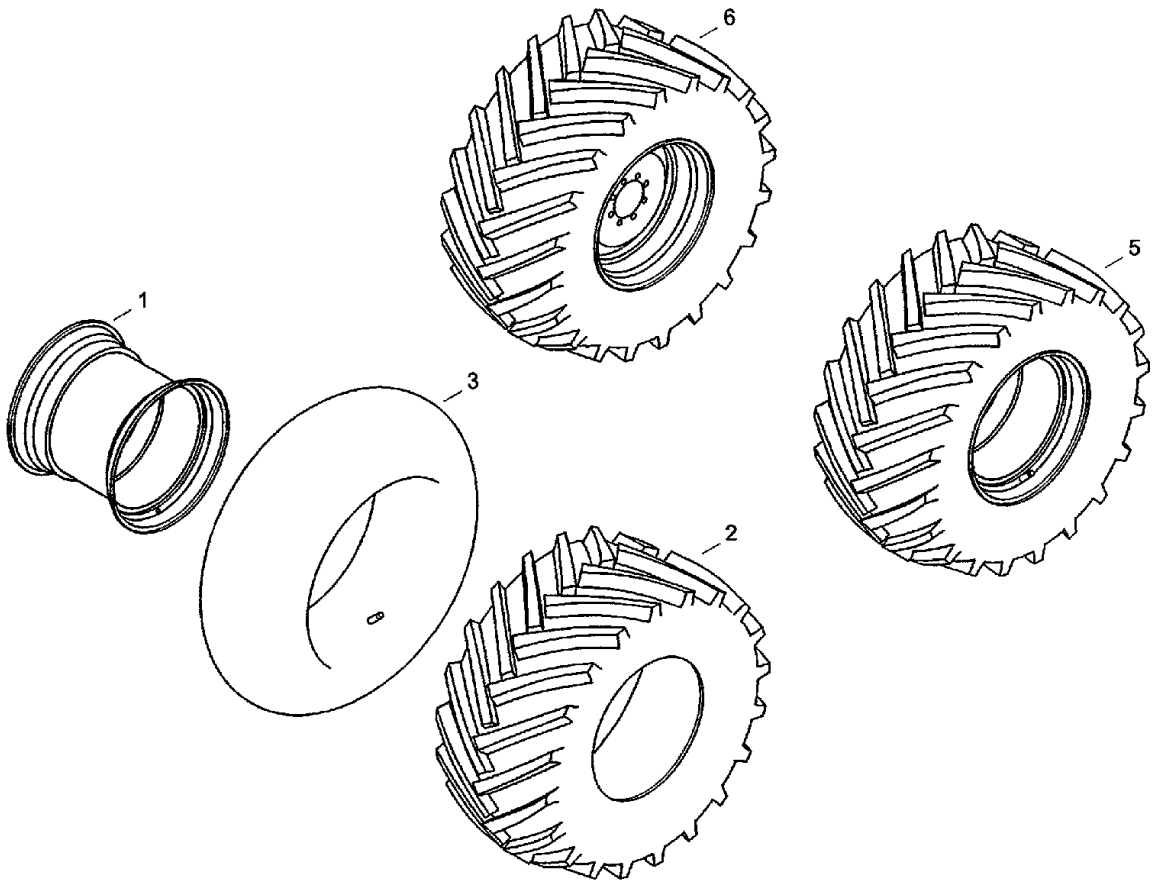

E180

CF80 CASE IH CROSS FLOW COMBINE

E301 TIRES- DRIVING SHAFT [800/65-R32]

Ref	Part Number	Qty	Description
1	31329100	2	RIM, Web disk wheel DW27X32/8/275/ET-120
2	31344630	2	TIRE, RUBBER, Tyre 800/65R32-172A8AS
3	060520788	2	AIR TUBE, Air tube 30.5-32
5	31332707	1	WHEEL ASSY., Driving wheel l, 800/65R32-172A8AS FELGE DW2
6	31332715	1	WHEEL ASSY., Driving wheel r, 800/65R32-172A8AS FELGE DW2

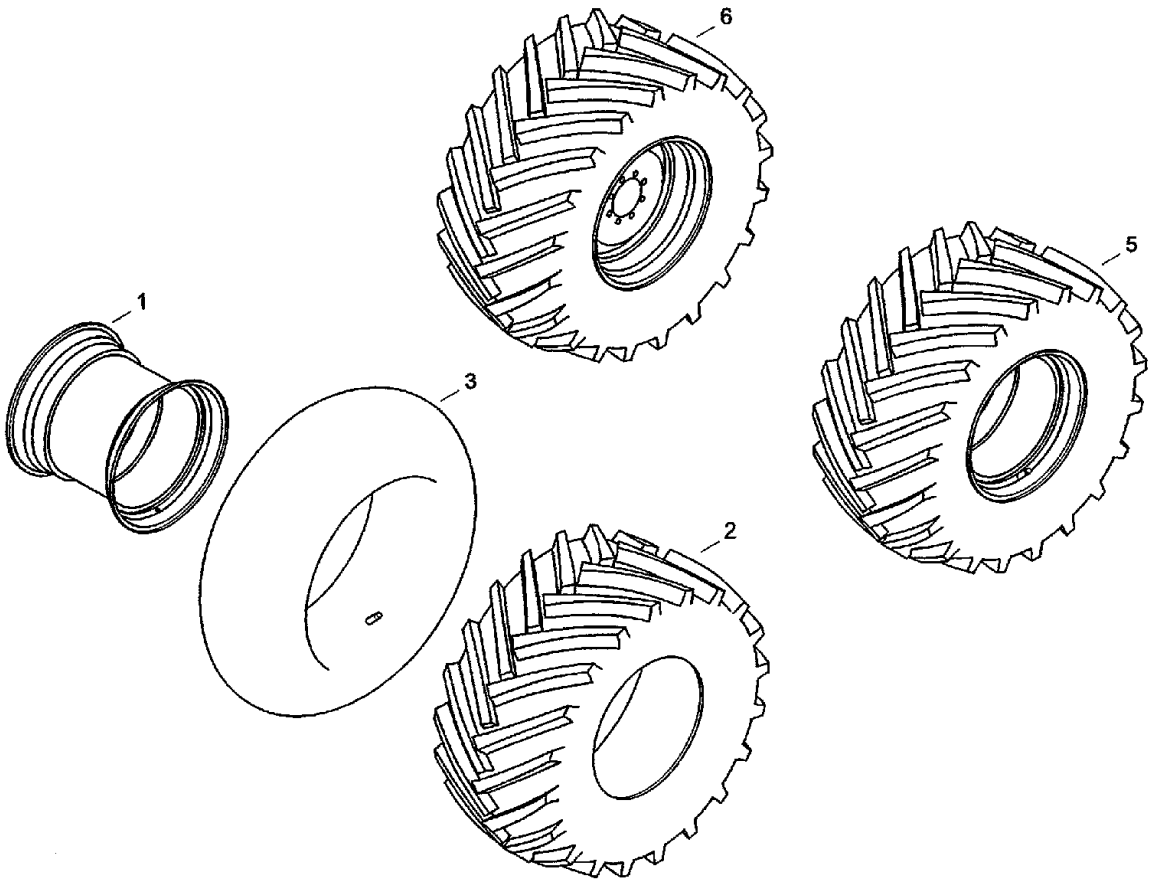

E180

CF80 CASE IH CROSS FLOW COMBINE

E302 TIRES- DRIVING SHAFT [650/75-R32]

Ref	Part Number	Qty	Description
1	061067565	2	RIM, Web disk wheel DW21x32/275/8/ET60
2	060533622	2	TIRE, RUBBER, Tyre 650/75R32-167A8AS
3	060520755	2	AIR TUBE, Air tube 24.5-32
5	31342918	1	WHEEL ASSY., Driving wheel l, 650/75-1 72A8AS FELGE DW21X3
6	31342926	1	WHEEL ASSY., Driving wheel r, 650/75-1 72A8AS FELGE DW21X3

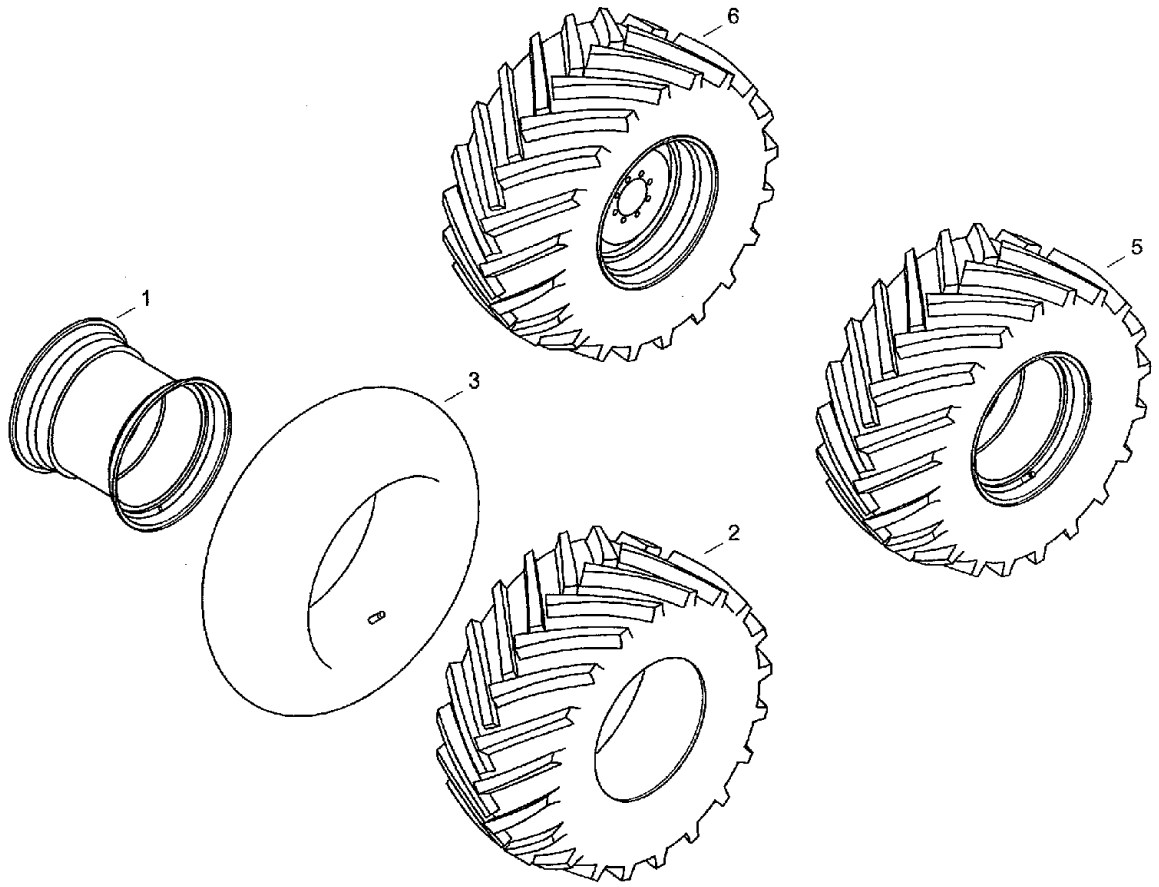

E180

CF80 CASE IH CROSS FLOW COMBINE

E303 TIRES- DRIVING SHAFT [710/75-R34]

Ref	Part Number	Qty	Description
1	31341990	2	RIM, Web disk wheel DW23X34/8/275/ET-90
2	31342050	2	TIRE, RUBBER, Tyre 710/75R34AS168A8
3	31342067	2	AIR TUBE, Air tube 710/75R34
5	31341982	1	WHEEL ASSY., Driving wheel l, 710/75R34-168A8AS FELGE DW2
6	31342001	1	WHEEL ASSY., Driving wheel r, 710/75R34-168A8AS FELGE DW2

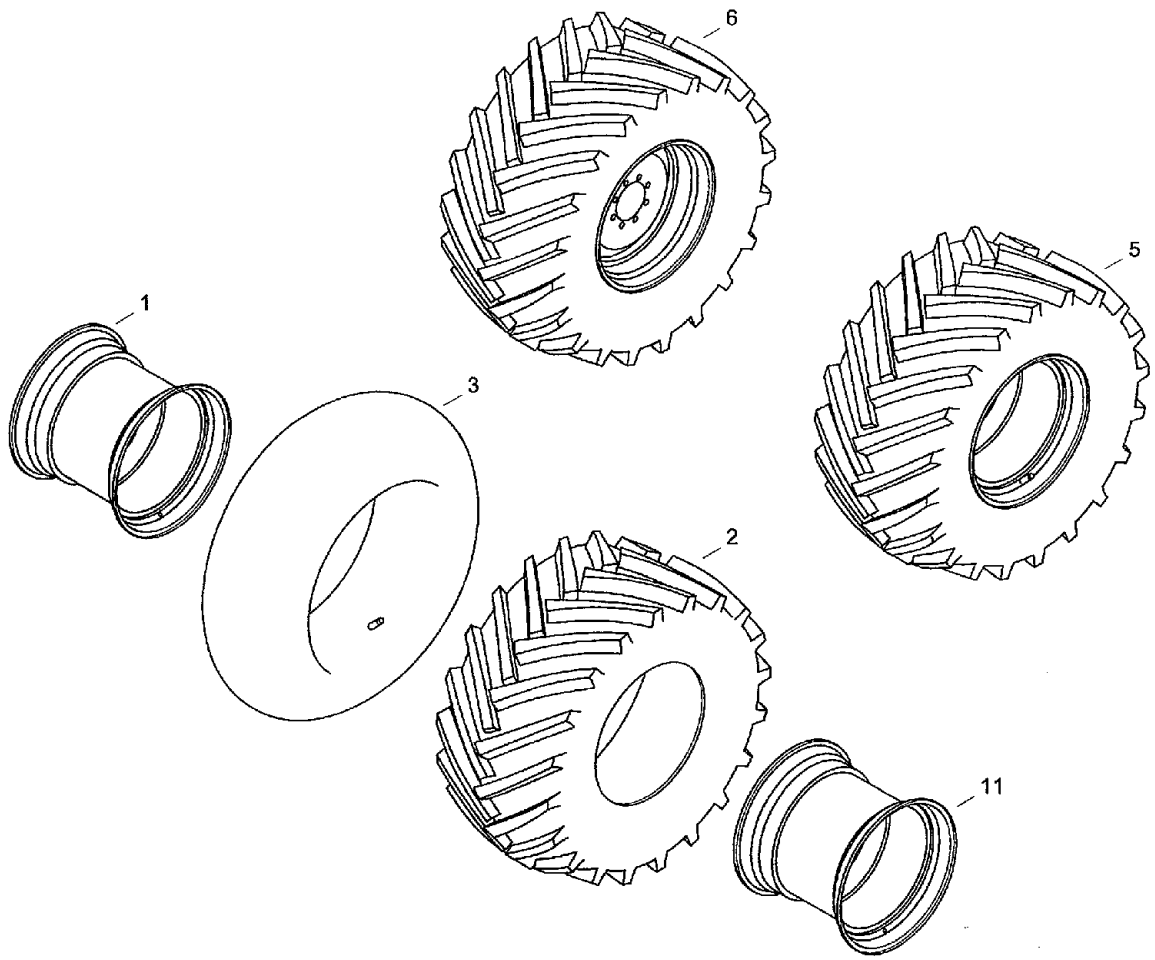

E180

CF80 CASE IH CROSS FLOW COMBINE

E304 TIRES- DRIVING SHAFT [680/85-R32]

Ref	Part Number	Qty	Description
1	061067565	1	RIM, Web disk wheel DW21x32/8/275/ET-60
2	31341443	2	TIRE, RUBBER, Tyre 680/85R32AS173A8
3	31341451	2	AIR TUBE, Air tube 680/85R32
5	31341427	1	WHEEL, Driving wheel l, 680/85R32-173A8 FELGE DW21X
6	31341435	1	WHEEL, Driving wheel r, 680/85R32-173A8 FELGE DW21X
11	31341410	1	RIM, Web disk wheel DW21x32/8/275/ET-90

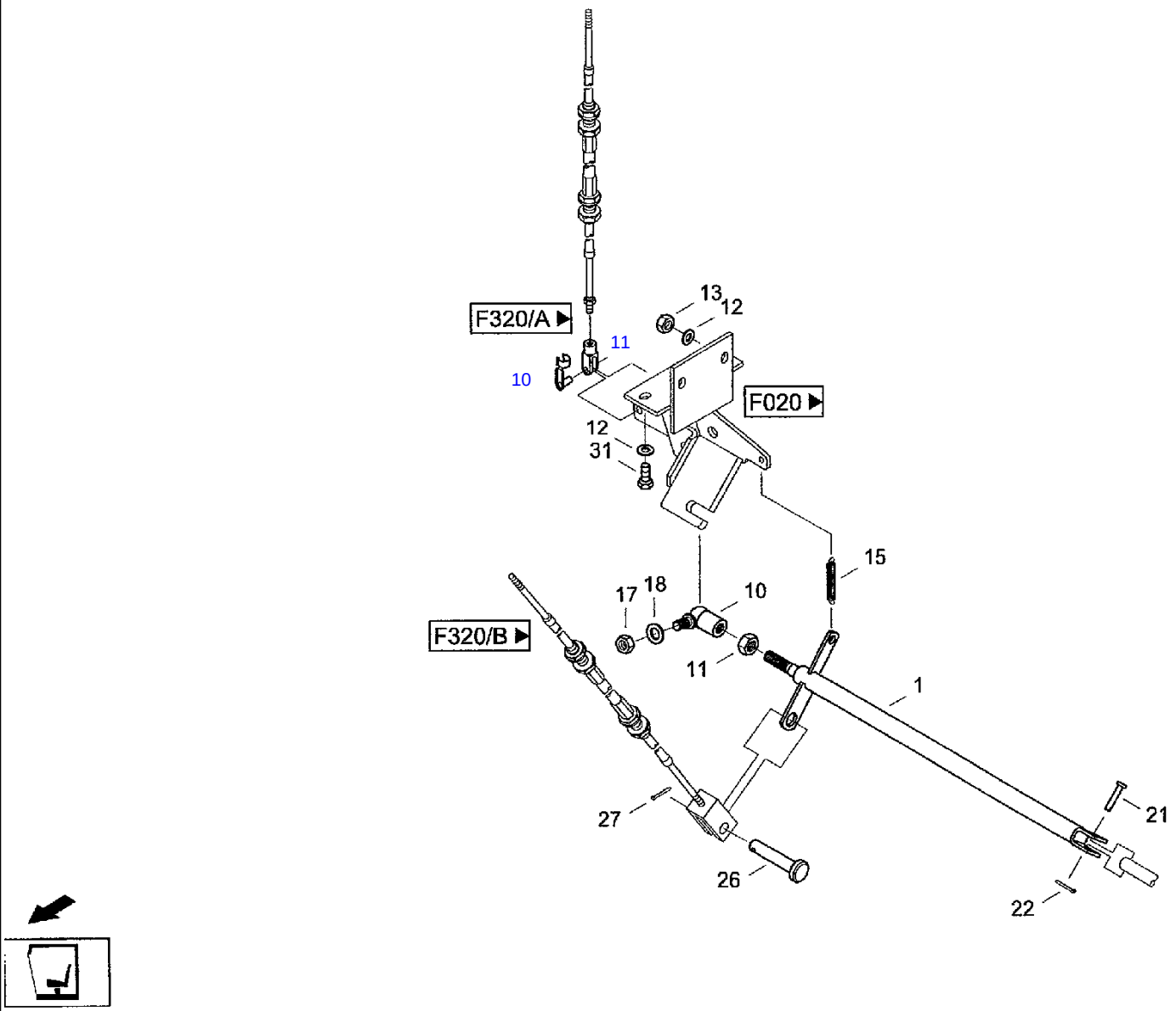
F320/A
13
12
11
10
F020
12
31
15
17
18
10
F320/B
11
1
27
21
26
22

CF80 CASE IH CROSS FLOW COMBINE

F010 OPERATOR'S PLATFORM- GEAR LINKAGE

Ref	Part Number	Qty	Description
1	31341330	1	ROD, Rod Ф032-03.01.000 ШТОК
10	004023072	1	JOINT, Angle joint CSL19-A3CDIN71802
11	006216310	1	NUT, Hex nut M1 4x1,51508673 10
12	06577052	4	WASHER, SPECIAL, Locking washer B10
13	832-46410	2	NUT, LOCK, M10 x 1.5, Cl 8, Hex nut 10DIN9808
15	006735493	1	SPRING, TENSION, Tension spring B1,2x13x10AA2 СТ6.02.015 ПРУЖИНА
17	006216310	1	NUT, Hex nut M14x1,5ISO867310
18	06577108	1	WASHER, SPECIAL, Locking washer M14
21	060150256	1	PIN, LARGE, Bolt B6H1 1x35x31 DIN1444 ST ПАЛЕЦ
22	06400271	1	PIN, SPLIT (COTTER), Splint pin 1,6x12DIN94ST
26	31290343	1	BOLT, Bolt Ф032-00.00.004 ВТУЛКА
27	006400070	2	PIN, SPLIT (COTTER), Splint pin 3,2x28 DIN94 ST
31	614-10030	2	BOLT, Hex, M10 x 30, 8.8,
32		2	525-43300:134 ПАЛЕЦ
33		2	Ф032-00.00.002 ВИЛКА

F020 OPERATOR'S PLATFORM- DEFLECTOR

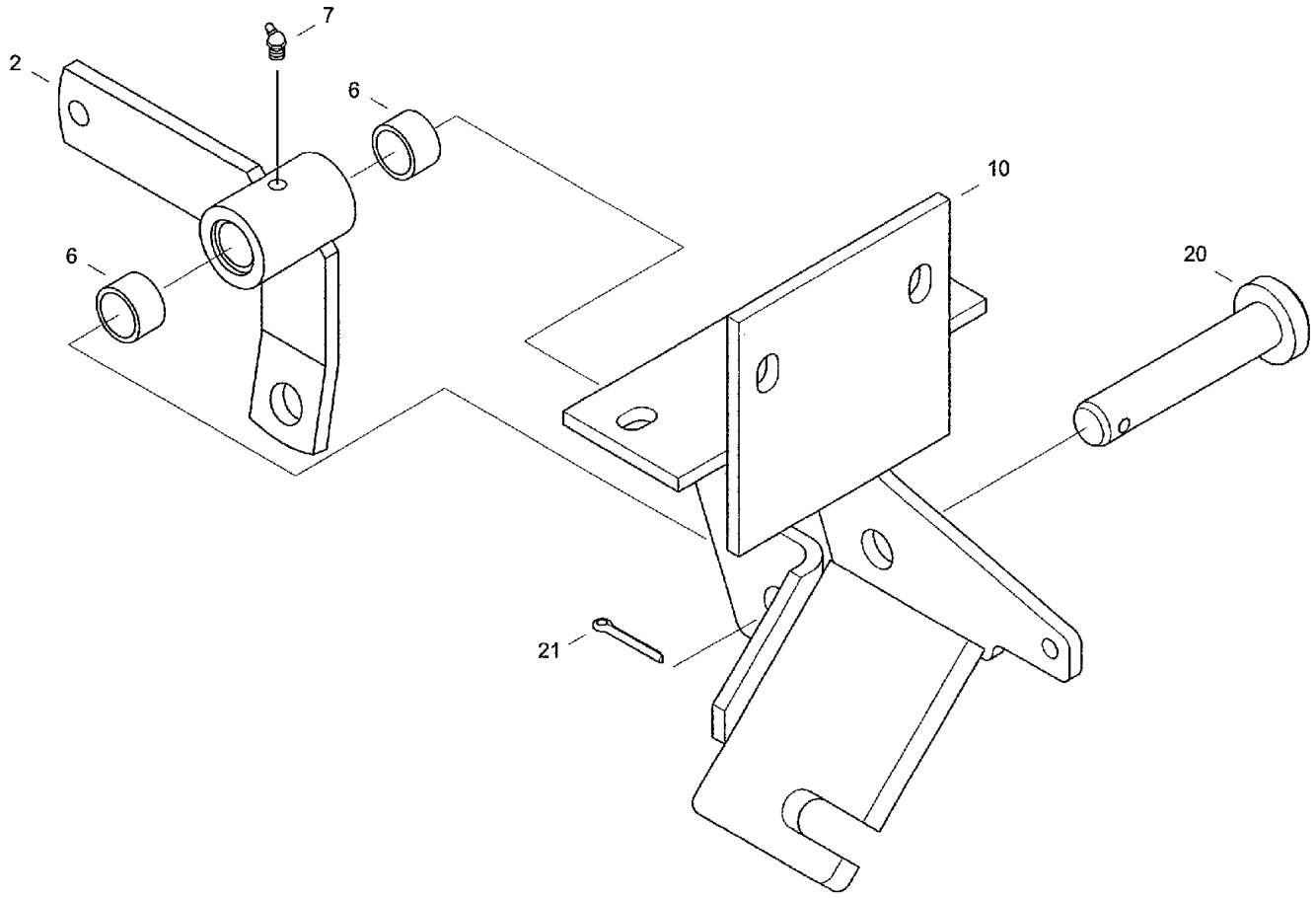

CF80 CASE IH CROSS FLOW COMBINE

F020 OPERATOR'S PLATFORM- DEFLECTOR

Ref	Part Number	Qty	Description
2	061079913	1	LEVER, Lever Ф032-02.02.100 РЫЧАГ
6	020510455	2	BUSHING, Sleeve 494739-A ВТУЛКА
7	03629381	1	NIPPLE, LUBE, Grease nippel BM6DIN71412
10	31334813	1	HOLDER, Support
20	07640590	1	PIN, LARGE, Bolt B16H11x65x59 DIN1444 ST Ф032-02.00.001 ОСЬ
21	06401520	1	PIN, SPLIT (COTTER), Splint pin 4x25 DIN94 ST

F040 OPERATOR'S PLATFORM- BRAKE PIPING

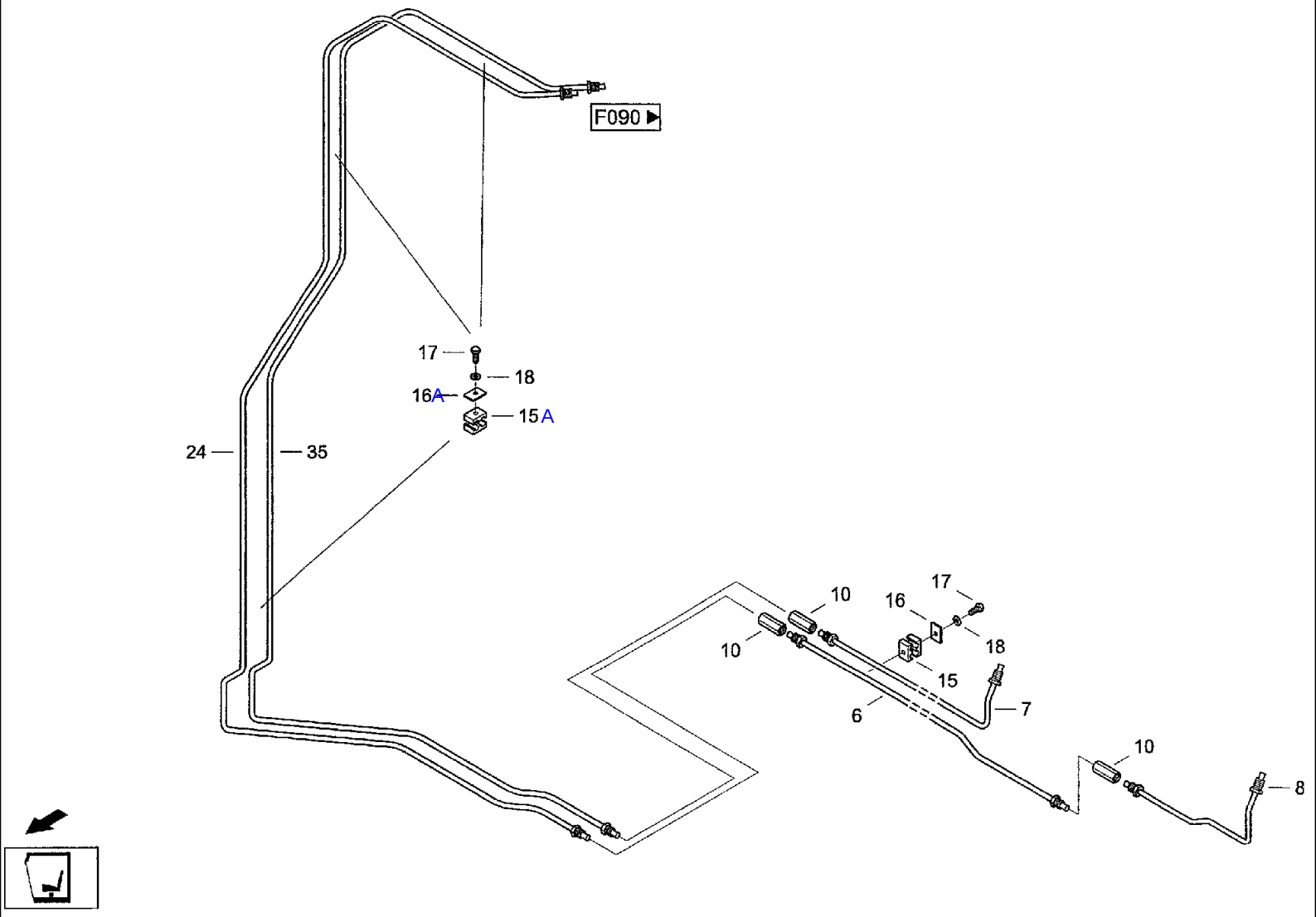

CF80 CASE IH CROSS FLOW COMBINE

F040 OPERATOR'S PLATFORM- BRAKE PIPING

Ref	Part Number	Qty	Description
6	31339705	1	TUBE, Brake tube 6
7	31339713	1	TUBE, Brake tube 7
8	31316772	1	PIPE, Brake tube 8
10	004012576	3	RESTRICTOR, Pipe fitting TGL29985/06-6 M12X1
15	31336952	4	FIXING BRACKET, Duoble attaching clip LNG1 06/06 PP
16	31337004	4	PLATE, SPACER, Cover plate DPL1
17	614-6020	4	BOLT, Hex, M6 x 20, 8.8, Hex bolt M6x20ISO40178.8
18	06577124	4	WASHER, Locking washer B6
24	31356304N1	1	TUBE, Brake tube LS
35	31356312N1	1	TUBE, Brake tube RS
15A		2	060150826 ДЕТАЛЬ ХОМУТА
16A		2	006646250 НАКЛАДКА

003799863 ДЕТАЛЬ ХОМУТА

006646291 НАКЛАДКА

F050(01) OPERATOR'S PLATFORM- CAB CARRIER

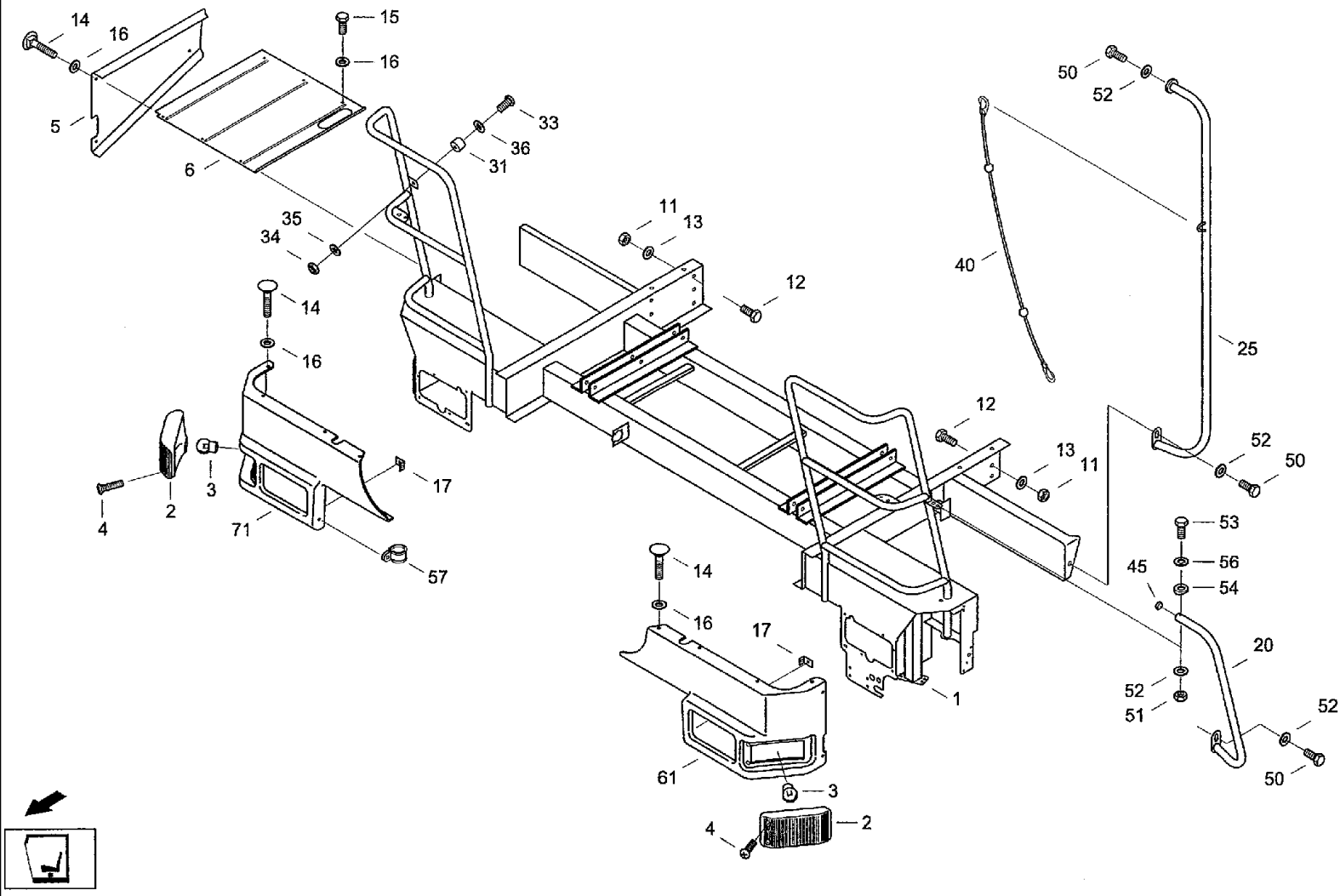

CF80 CASE IH CROSS FLOW COMBINE

F050(01) OPERATOR'S PLATFORM- CAB CARRIER

Ref	Part Number	Qty	Description
1	061069198	1	SUPPORT, Cab carrier
2	060519351	2	LIGHT, INDICATER, Flasher lamp V
3	07081070	2	BULB, Filament lamp PY21W
4	060502833	4	SCREW, Raised countersunk head screw M5X45-4.8-H-A3C ISO7047
5	31340032	1	COVER, Cap
6	31299472	1	COVER, Cap
11	829-1412	16	NUT, M12, Cl 10, Hex nut M12 ISO4032 10
12	627-12025	16	BOLT, Hex, M12 x 25, 10.9, Hex bolt M1 2x25130401710.9
13	06577060	16	WASHER, Locking washer B12
14	DF091033	17	Fillister head screw M6x16 ISO7380 10.9
15	614-6012	6	BOLT, Hex, M6 x 12, 8.8, Hex bolt M6x12ISO40178.8
16	06577124	24	WASHER, Locking washer B6
17	072046525	2	HOLDER, Shield support
20	31341636	1	RAMP, Handrail 1
25	31341652	1	RAMP, Handrail 2
31	001154688	1	PLUG, Foot DURCHM.40x33 EPDM-WEICH
33	006018137	1	SCREW, Lens-head screw M6x35 DIN85 4.8
34	825-1406	2	NUT, M6, Cl 8,
35	06577036	1	WASHER, SPECIAL, Locking washer M6
36	895-11006	1	WASHER, M6, Washer 6.4DIN125ST
40	31290874	1	ROPE, METAL, Metal rope MIT 2x GUMMIKUGEL
45	060533003	1	CAP, Cap
50	614-10025	3	BOLT, Hex, M10 x 25, 8.8, Full Thd, Hex bolt M10x25ISO40178.8
51	832-10408	1	NUT, M8 x 1.25, Cl 8, Hex nut M8 DIN982 8
52	06577052	4	WASHER, SPECIAL, Locking washer B10

CF80 CASE IH CROSS FLOW COMBINE

F050(02) OPERATOR'S PLATFORM- CAB CARRIER

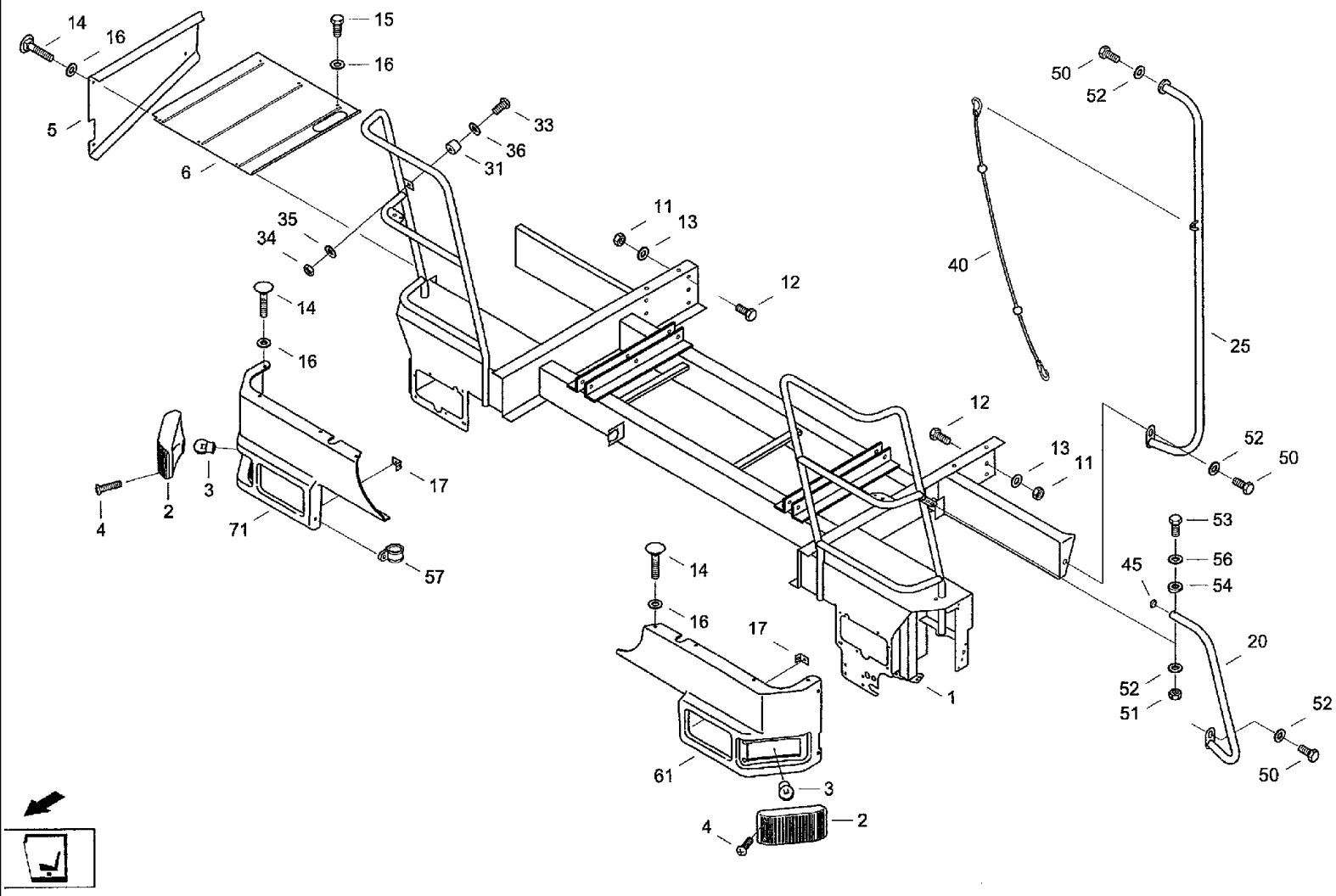

CF80 CASE IH CROSS FLOW COMBINE

F050(02) OPERATOR'S PLATFORM- CAB CARRIER

Ref	Part Number	Qty	Description
53	814-8055	1	BOLT, Hex, M8 x 55, 8.8, Hex bolt M8x55 ISO4014 8.8
54	01344603	2	WASHER, Saddle washer
56	06577044	2	WASHER, SPECIAL, Locking washer B8
57	98039903	2	FIXING BRACKET, Pipe clip D1-18X20W1-1 DIN3016
61	061072714	1	ORIFICE, Lamp diaphragm l
71	061072722	1	ORIFICE, Lamp diaphragm r

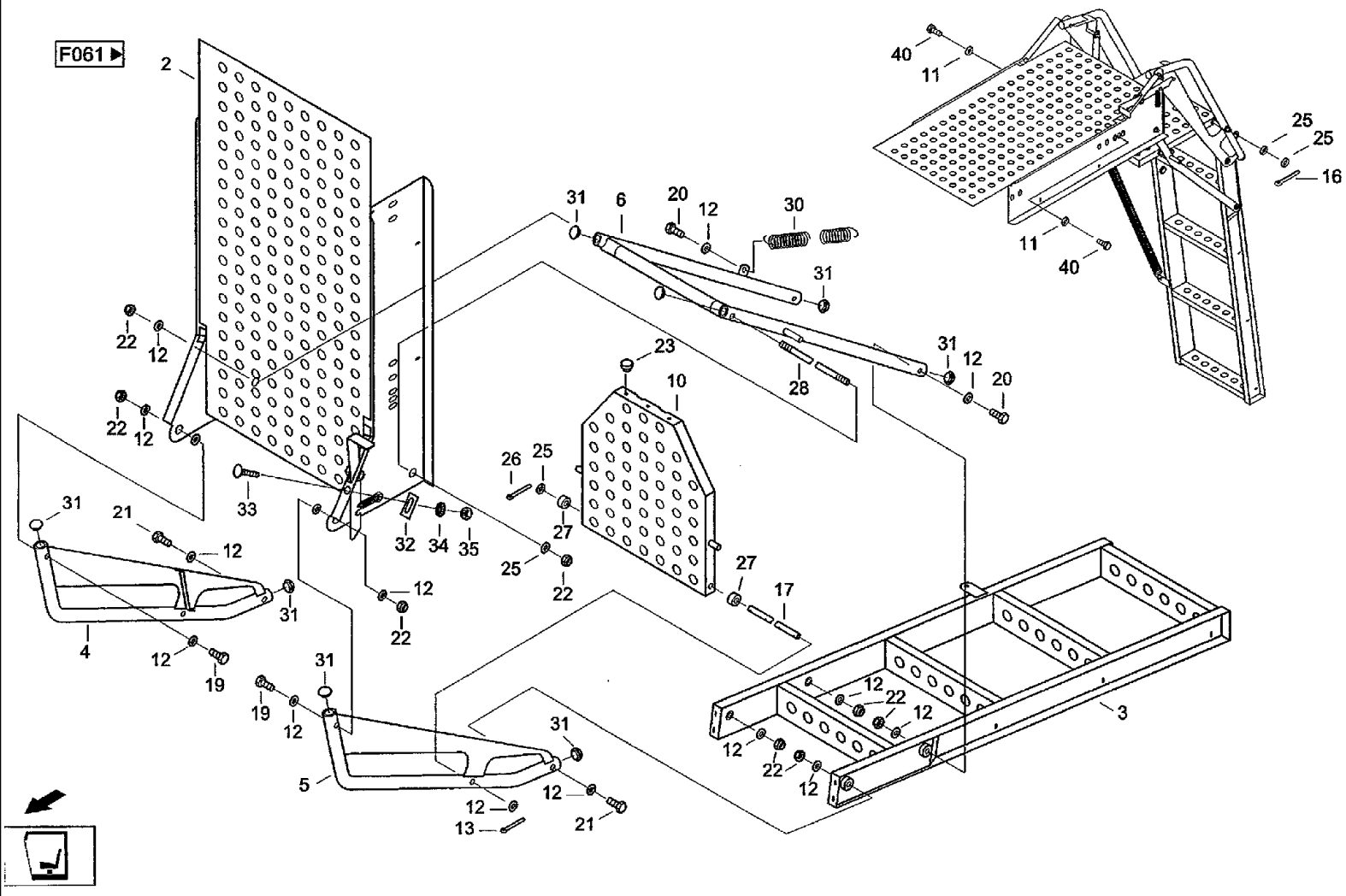
F061
2
40
11
25
25
16
31
6
20
12
30
31
22
12
22
12
23
10
28
31
12
20
26
25
27
25
22
33
32
34
35
12
22
27
17
31
21
12
31
4
12
19
19
12
31
5
31
12
12
13
21
12
22
12
22
12
12
3

CF80 CASE IH CROSS FLOW COMBINE

F060(01) OPERATOR'S PLATFORM- STEPS

Ref	Part Number	Qty	Description
2	31312898	1	STEP, Ladder holder
3	31312865	1	LADDER, Bottom
4	31305585	1	GRAB RAIL, Upper part V
5	31305577	1	GRAB RAIL, Upper part h
6	31311157	1	BAR, Conrad
10	31311204	1	STEP, Folding step
11	06577052	2	WASHER, SPECIAL, Locking washer B10
12	895-11012	2	WASHER, M12 x 24 x 2.5, Washer 13DIN125ST
13	733-3220	1	PIN, SPLIT (COTTER), M3.2 x 20, Splint pin 3,2x20 DIN94 ST
17	31311253	1	STEM, Through bolt
19	814-12060	2	BOLT, Hex, M12 x 60, 8.8, Hex bolt M12x60 ISO4014 8.8
20	814-12075	2	BOLT, Hex, M12 x 75, 8.8, Hex bolt M12x75 ISO4014 8.8
21	814-12080	2	BOLT, Hex, M12 x 80, 8.8,
22	06116235	8	NUT, Hex nut M12DIN9858
23	001154028	7	WASHER, RUBBER, Button buffer K445 03 10898 004
25	895-11012	20	WASHER, M12 x 24 x 2.5, Washer 13DIN125ST
26	733-3220	3	PIN, SPLIT (COTTER), M3.2 x 20, Splint pin 3,2x20 DIN94 ST
27	31305503	2	RING, Sleeve
28	31311237	1	THREADED ROD, Thread spill
30	006735766	1	SPRING, TENSION, Tension spring C4x36x60AA2
31	060533003	8	CAP, Cap
32	31317974	1	STOP, Stop
33	007751242	1	SCREW, Flat-round-head screw M6x16 DIN603 8.8
34	06577124	1	WASHER, Locking washer B6
35	825-1406	1	NUT, M6, Cl 8,

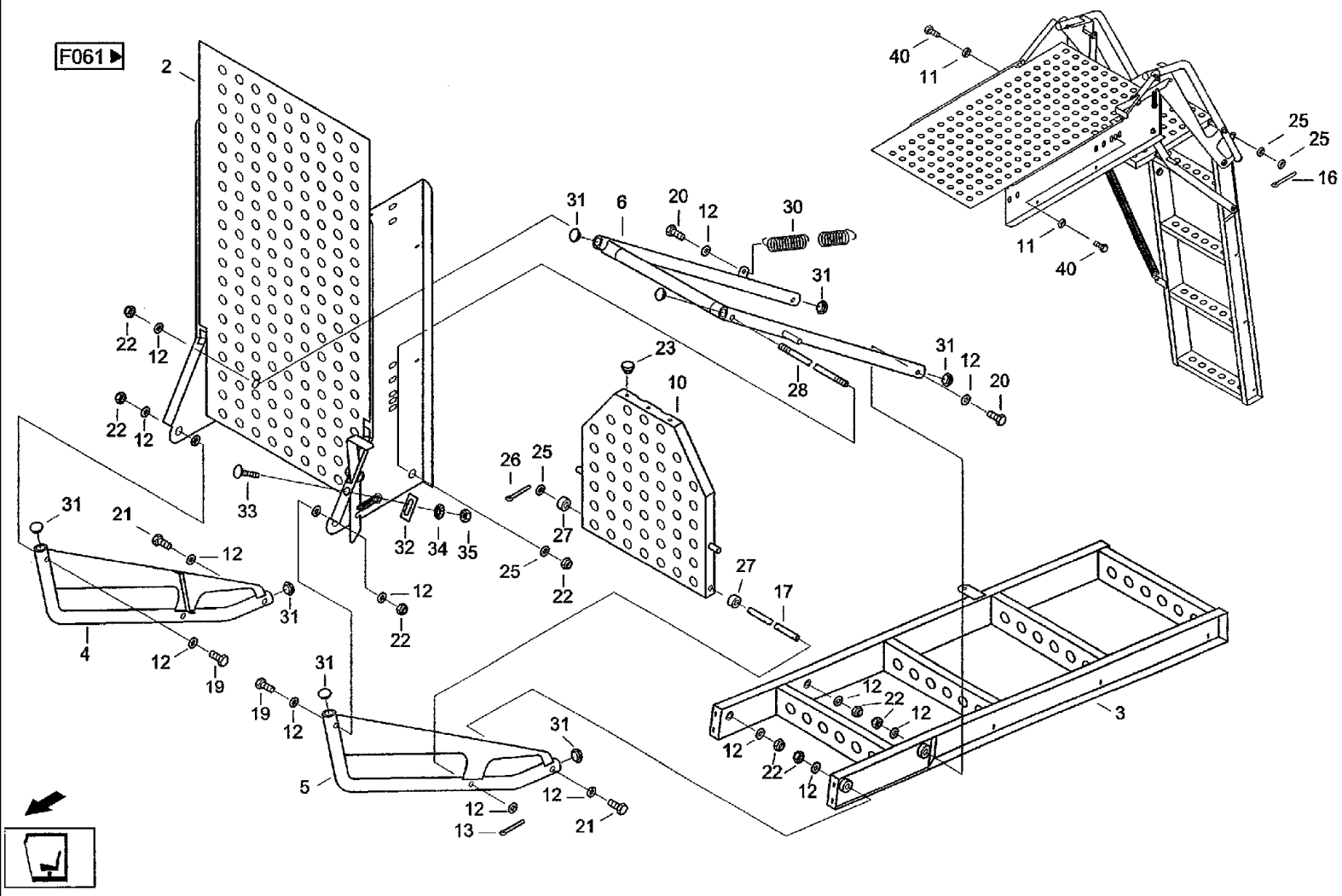
F061
2
40
11
25
25
16
31
6
20
12
30
31
22
12
22
12
23
10
31
12
20
28
26
25
27
25
22
27
17
33
32
34
35
12
22
31
21
12
31
4
12
19
19
12
31
5
31
12
12
13
21
12
22
12
12
22
12
3

CF80 CASE IH CROSS FLOW COMBINE

F060(02) OPERATOR'S PLATFORM- STEPS

Ref	Part Number	Qty	Description
40	614-10025	2	BOLT, Hex, M10 x 25, 8.8, Full Thd, Hex bolt M10x25ISO40178.8

F061 OPERATOR'S PLATFORM- LADDER HOLDER

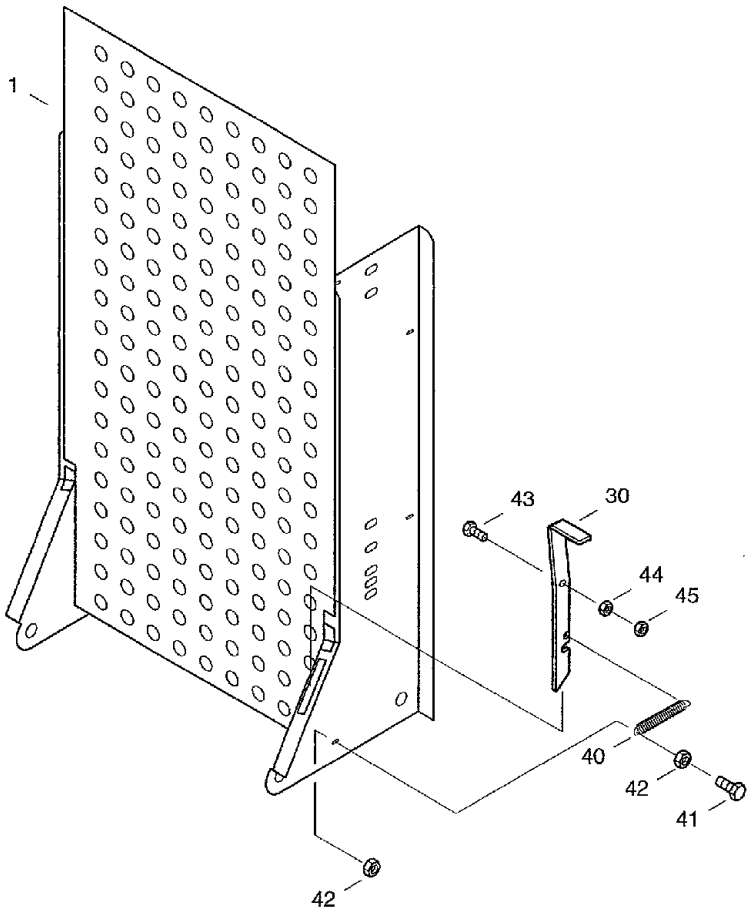

◄F060

CF80 CASE IH CROSS FLOW COMBINE

F061 OPERATOR'S PLATFORM- LADDER HOLDER

Ref	Part Number	Qty	Description
1	31341757	1	SUPPORT, Ladder holder
30	31311245	1	LATCH, Latch
40	06702196	1	Tension spring B1,6x18x10AA1
41	614-6025	1	BOLT, Hex, M6 x 25, 8.8, Hex bolt M6x25ISO40178.8
42	825-1406	2	NUT, M6, Cl 8,
43	614-10030	1	BOLT, Hex, M10 x 30, 8.8,
44	97012032	1	NUT, Hex nut M10DIN9858
45	825-1410	1	NUT, M10, Cl 8,

F070(01) OPERATOR'S PLATFORM- AIR- CONDITIONER

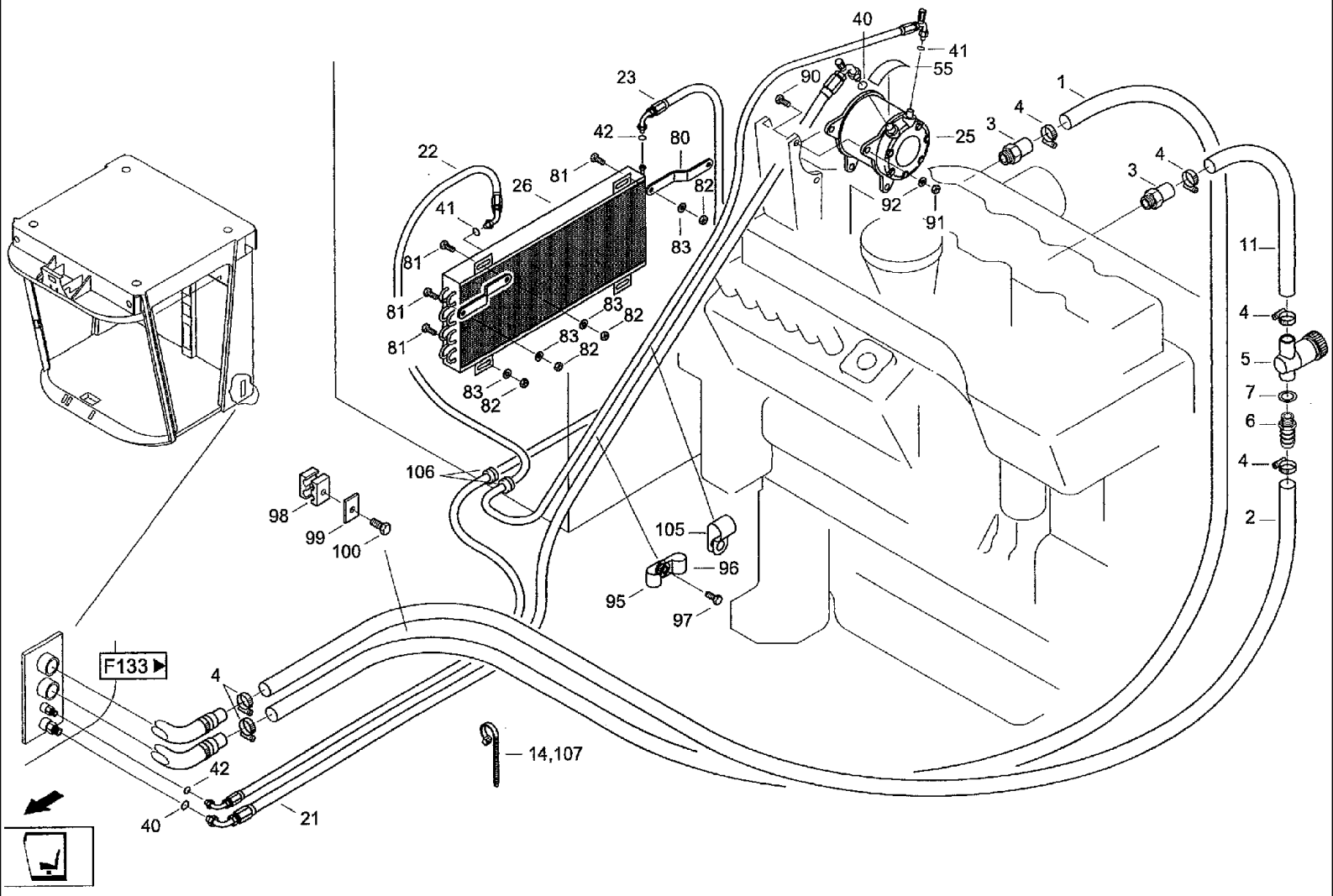

CF80 CASE IH CROSS FLOW COMBINE

F070(01) OPERATOR'S PLATFORM- AIR- CONDITIONER

Ref	Part Number	Qty	Description
1	061072755	1	HOSE, Heating pipe r
2	061072763	1	HOSE, Heating pipe v
3	03243927	2	ADAPTER, Socket
4	06623236	6	Hose clip AL16-27-W2-1 DIN3017
5	03601852	1	COCK, Cock M.BETATIGUNGSGRIFF
6	04097935	2	ADAPTER, Screw neck
7	04101503	1	GASKET, Seal A16x20 DIN7603 CU
11	061022006	1	HOSE, LARGE, Hose H1
14	060509124	10	CABLE, Cable band PLT-3H-30
21	31314504	1	HOSE, Hose NW12
22	31314512	1	HOSE, Hose NW10
23	31314498	1	HOSE, Hose NWS
25	03129547	1	COMPRESSOR, Compressor 12V
26	072074303	1	CAPACITOR, Condenser
40	060511215	2	SEAL, O-ring 7/8ZOLL NW12
41	060511207	2	O-RING, Packing ring 3/4ZOLLNW10-134A
42	060511192	2	SEAL, Packing ring 5/8ZOLLNW8-134A
55	060511344	1	LABEL, Band R134A
80	061072747	2	SUPPORT, Support
81	614-8025	6	BOLT, Hex, M8 x 25, 8.8,
82	825-1408	6	NUT, M8, Cl 8,
83	06577028	12	WASHER, SPECIAL, Locking washer M8
90	614-10030	4	BOLT, Hex, M10 x 30, 8.8,
91	825-1410	4	NUT, M10, Cl 8,
92	06577003	4	WASHER, SPECIAL, Locking washer M10

F070(02) OPERATOR'S PLATFORM- AIR-CONDITIONER

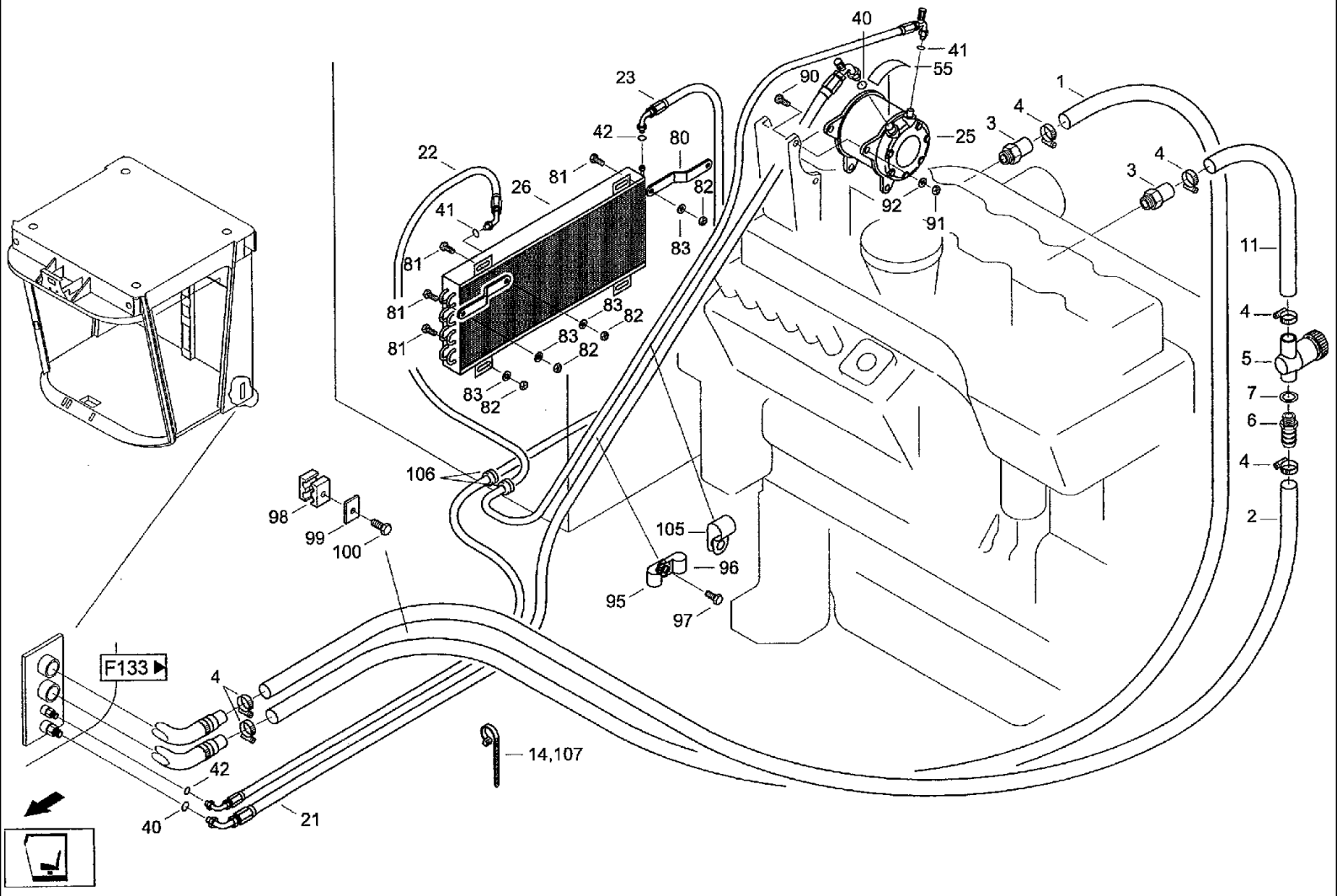

CF80 CASE IH CROSS FLOW COMBINE

F070(02) OPERATOR'S PLATFORM- AIR-CONDITIONER

Ref	Part Number	Qty	Description
95	03269831	1	CLAMP, Pipe clip D1-20x1 5W1-1 DIN3016
96	06623910	1	CLAMP, Pipe clip D1-18x1 5W1-1 DIN3016 W1
97	614-8020	1	BOLT, Hex, M8 x 20, 8.8, Hex bolt M8x20ISO40178.8
98	06647661	1	SHIN, Clamping halves Z-KP-3-G-22-22 DIN3015 PP
99	06647717	1	COVER, Cover plate Z-DP-3DIN3015W1
100	614-8045	1	BOLT, Hex, M8 x 45, 8.8, Full Thd, Hex bolt M8x45ISO40178.8
105	02885372	3	CLAMP, Pipe clip D1-70x25W1-1 DIN3016
106	060505354	2	GROMMET, Rubber passage TET14-20
107	07074658	16	CABLE, Cable band 525x8,8TSL-530HD

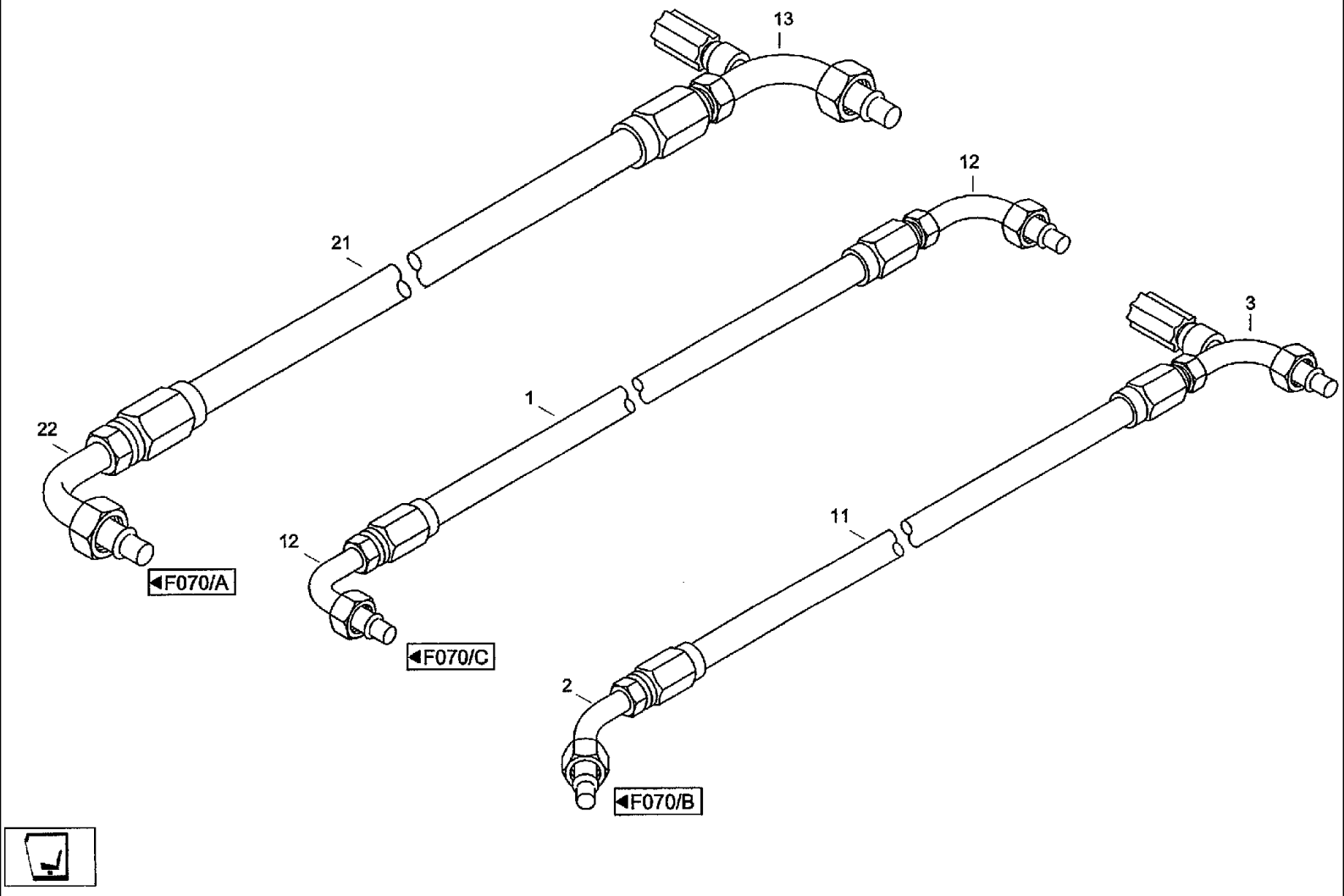
13
12
21
3
1
22
12
11
F070/A
F070/C
2
F070/B

CF80 CASE IH CROSS FLOW COMBINE

F071 OPERATOR'S PLATFORM- HOSE

Ref	Part Number	Qty	Description
1	05811345	1	HOSE, LARGE, Cooling water hose 6,2M NWS
2	05811312	1	FITTING, Instrument NW10/45GR.3/4ZOLL
3	060511176	1	ELBOW, Filler fittings NW10-90GRAD-3/4""
11	05811441	1	HOSE, Cooling water hose 2.1MNW10
12	060511143	2	FITTING, Instrument NW8-90GRAD-5/8""
13	060511184	1	ELBOW, Filler fittings NW12-90GRAD-7/8""
21	05811458	1	HOSE, Cooling water hose 6,2M NW12
22	060516687	1	FITTING, Instrument NW12-90GRAD-7/8""

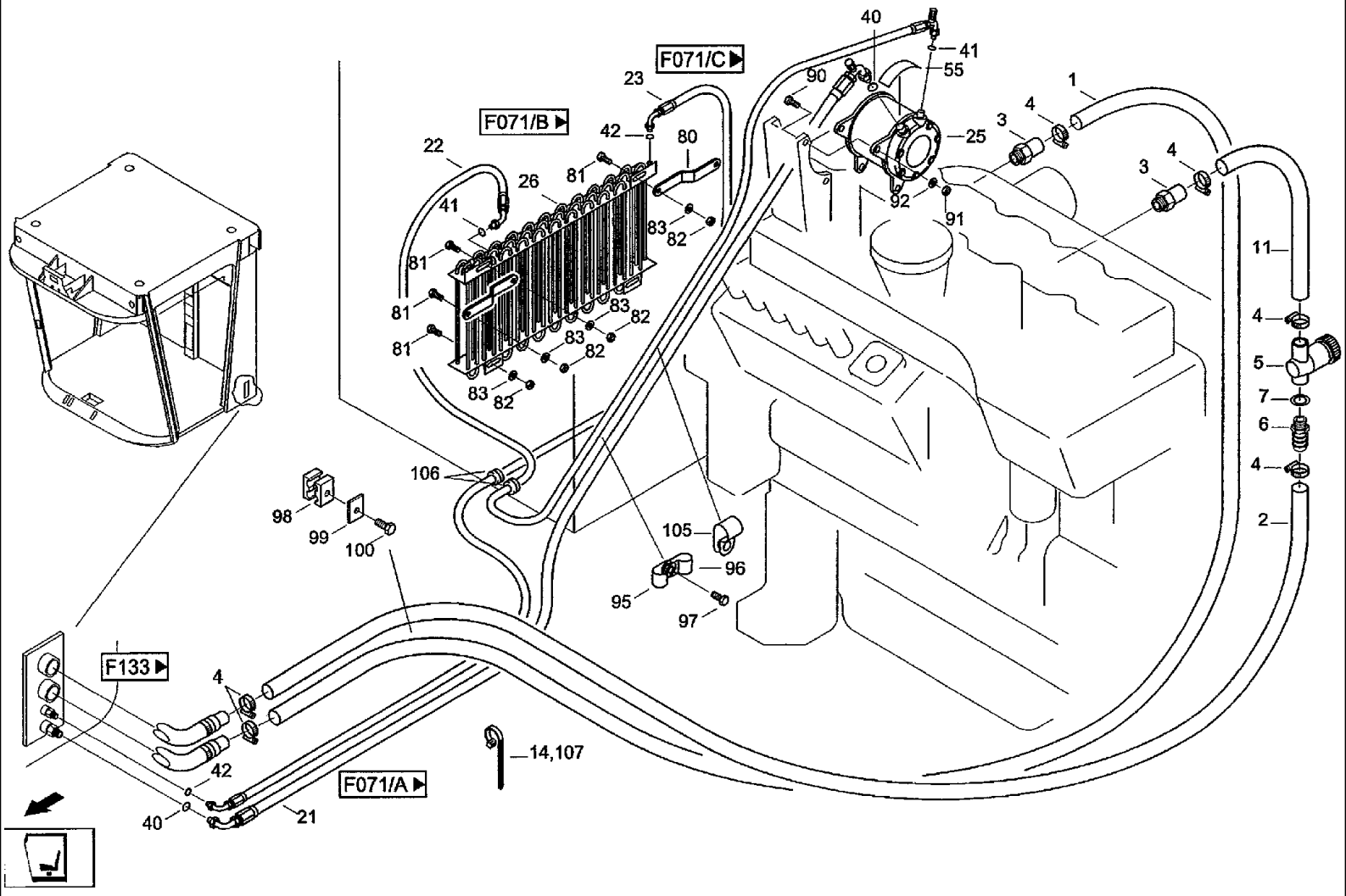
F071/C
F071/B
F133
F071/A
40
41
55
90
23
1
4
3
25
42
80
22
26
81
92
91
11
5
7
6
2
106
98
99
100
105
96
95
97
14,107
21

CF80 CASE IH CROSS FLOW COMBINE

F080(01) CAB- VARIOUS COMPONENTS [CF80K]

Ref	Part Number	Qty	Description
1	31341732	1	CAB, Cab CF KOMFORT
10	06347722	6	Hex bolt M12x70ISO401710.9
11	829-1412	6	NUT, M12, Cl 10, Hex nut M12ISO403210
12	06577060	6	WASHER, Locking washer B12
15	425-114	1	NUT, 1/4"-28, G5, Hex nut 1/4ZOLL -28UNF 8.8
16	06577036	1	WASHER, SPECIAL, Locking washer M6
18	07067064	3	Cable strap ACC38-A-20
19	07068200	7	CABLE, Cable band 188x4,8TSL190S-SW
20	07074658	1	CABLE, Cable band 525X8.8TSL530HD
32	02885372	1	CLAMP, Pipe clip D1-70x25W1-1 DIN3016
33	614-8025	1	BOLT, Hex, M8 x 25, 8.8,
34	825-1408	1	NUT, M8, Cl 8,
35	06577028	1	WASHER, SPECIAL, Locking washer M8
40	06577124	2	WASHER, Locking washer B6
41	825-1408	2	NUT, M8, Cl 8,
42	07081167	2	CLIP, Cable band PRST30S-S 14-30
43	01147744	1	GROMMET, Grommet A16x2,5
44	07070043	1	CABLE, Cable band 250x4,8TSL250S

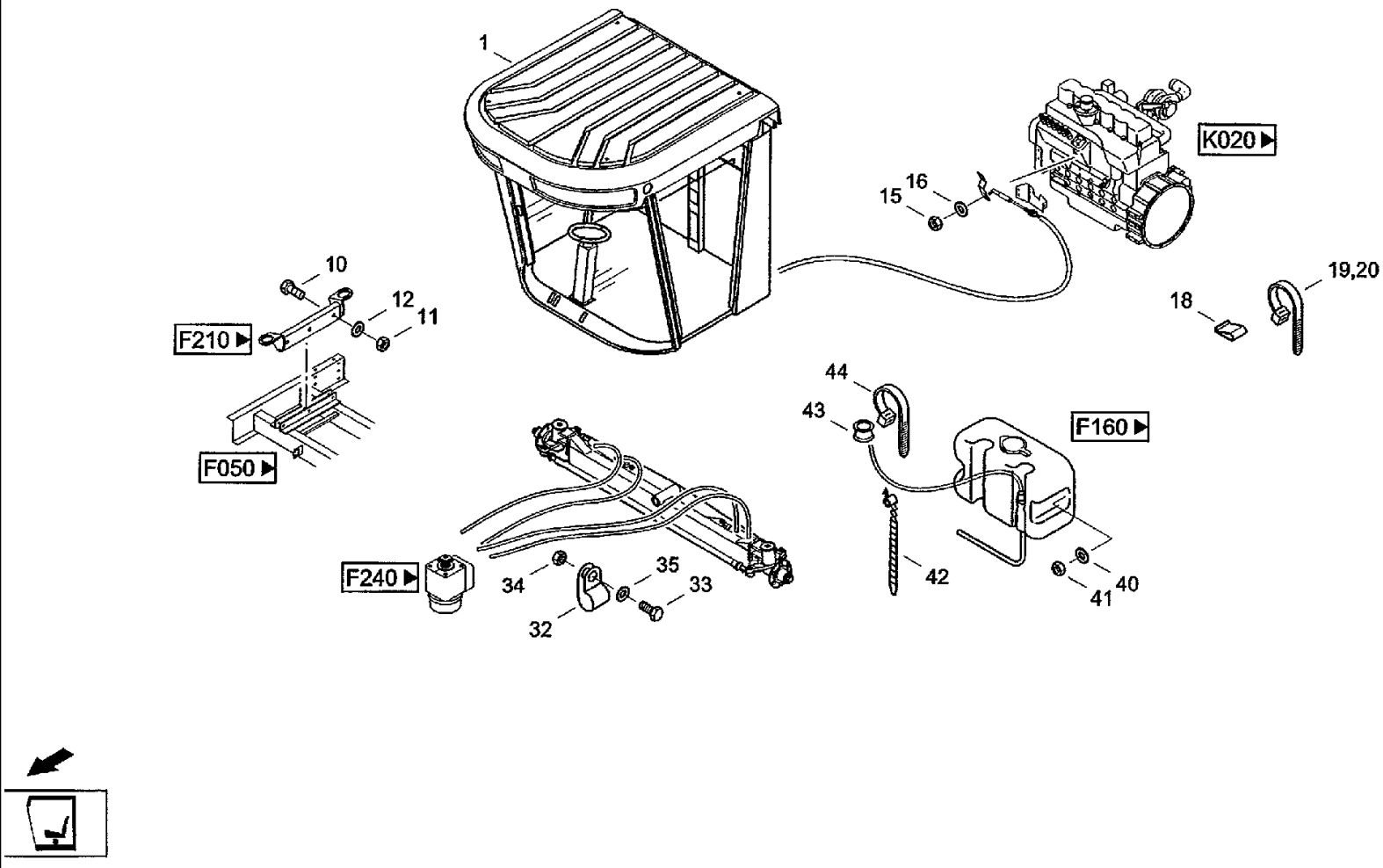
1
K020
15
16
19,20
18
10
12
11
F210
F050
44
43
F160
42
40
41
F240
34
35
33
32

CF80 CASE IH CROSS FLOW COMBINE

F080(02) CAB- VARIOUS COMPONENTS [CF80K]

Ref	Part Number	Qty	Description
1	31341732	1	CAB, Cab CF KOMFORT
10	06347722	6	Hex bolt M12X70ISO401710.9
11	829-1412	6	NUT, M12, Cl 10, Hex nut M12ISO4032 10
12	06577060	6	WASHER, Locking washer B12
15	425-114	1	NUT, 1/4"-28, G5, Hex nut 1/4ZOLL-28UNF8.8
16	06577036	1	WASHER, SPECIAL, Locking washer M6
18	07067064	3	Cable strap ACC38-A-20
19	07068200	7	CABLE, Cable band 188x4,8TSL190S-SW
20	07074658	1	CABLE, Cable band 525x8,8TSL530HD
32	02885372	1	CLAMP, Pipe clip D1-70x25W1-1 DIN3016
33	614-8025	1	BOLT, Hex, M8 x 25, 8.8,
34	825-1408	1	NUT, M8, Cl 8,
35	06577028	1	WASHER, SPECIAL, Locking washer M8
40	06577124	2	WASHER, Locking washer B6
41	825-1408	2	NUT, M8, Cl 8,
42	07081167	2	CLIP, Cable band PRST30S-S14-30
43	01147744	1	GROMMET, Grommet A16x2,5
44	07070043	1	CABLE, Cable band 250x4,8TSL250S

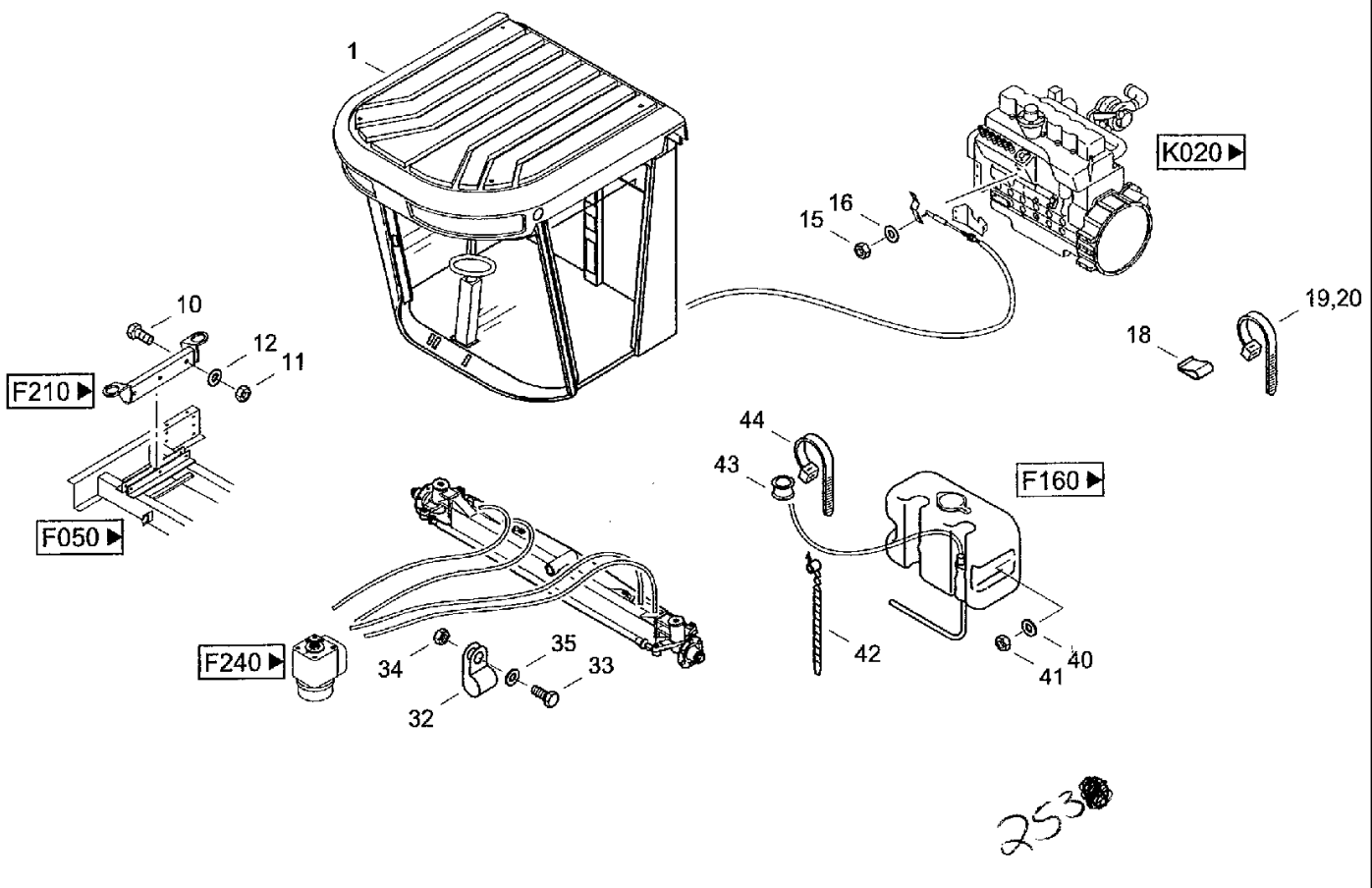
1
K020
15
16
19,20
18
10
12
11
F210
F050
44
43
F160
42
40
41
F240
34
35
33
32
2538

CF80 CASE IH CROSS FLOW COMBINE

F080(03) CAB- VARIOUS COMPONENTS [CF80P]

Ref	Part Number	Qty	Description
1	31341716	1	CAB, Cab
10	06347722	6	Hex bolt M12x70 ISO4017 10.9
11	829-1412	6	NUT, M12, Cl 10, Hex nut M12 ISO4032 10
12	06577060	6	WASHER, Locking washer B12
15	425-114	1	NUT, 1/4"-28, G5, Hex nut 1/4ZOLL -28UNF 8.8
16	06577036	1	WASHER, SPECIAL, Locking washer M6
18	07067064	3	Cable strap ACC38-A-20
19	07068200	7	CABLE, Cable band sw, 1 88x4,8 TSL-190-S
20	07074658	1	CABLE, Cable band 525x8,8TSL-530HD
32	02885372	1	CLAMP, Pipe clip D1-70X25W1-1 DIN3016
33	614-8025	1	BOLT, Hex, M8 x 25, 8.8,
34	825-1408	1	NUT, M8, Cl 8,
35	06577028	1	WASHER, SPECIAL, Locking washer M8
40	06577124	2	WASHER, Locking washer B6
41	825-1408	2	NUT, M8, Cl 8,
42	07081167	2	CLIP, Cable band PRST30S-S14-30
43	01147744	1	GROMMET, Grommet A16x2,5
44	07070043	1	CABLE, Cable band 250x4,8 TSL-250-S

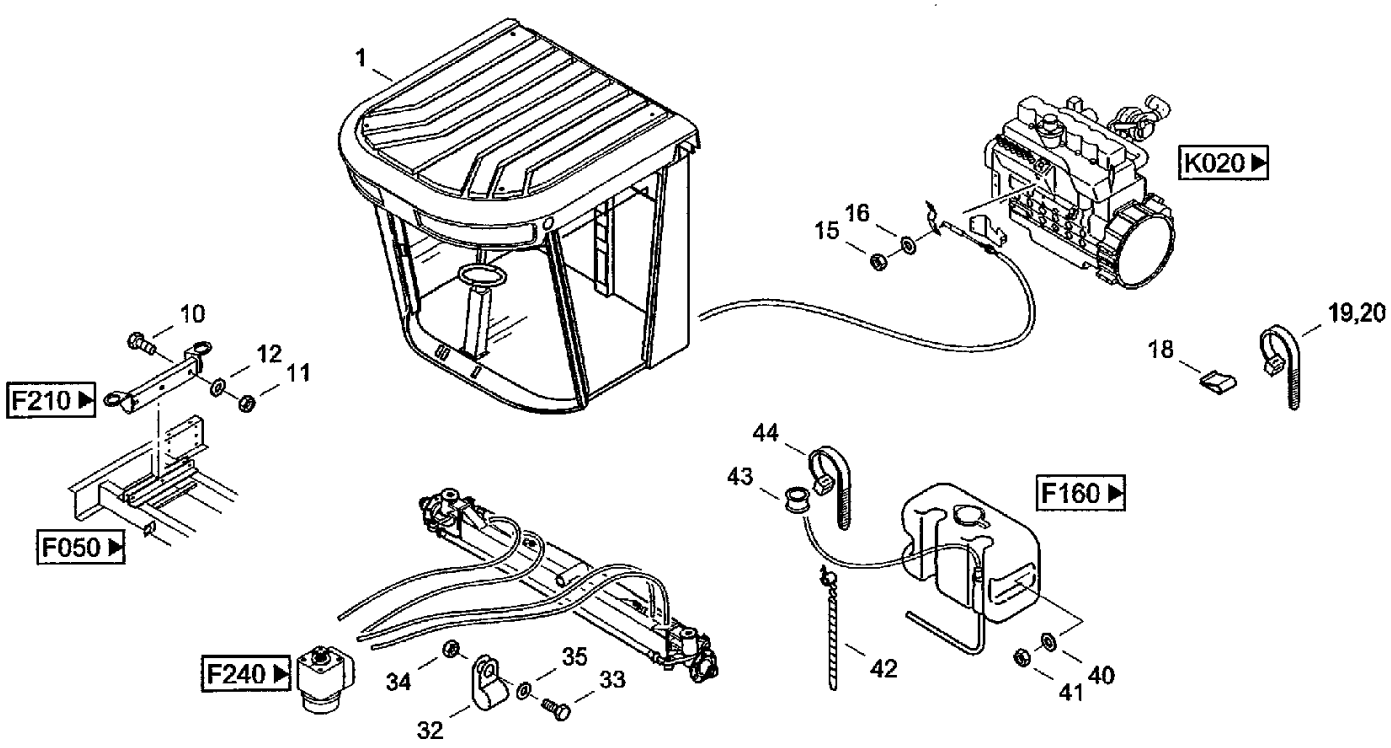
1
K020
15
16
19,20
18
10
12
11
F210
F050
44
43
F160
42
40
41
F240
34
35
33
32

CF80 CASE IH CROSS FLOW COMBINE

F080(04) CAB- VARIOUS COMPONENTS [CF80Q]

Ref	Part Number	Qty	Description
1	31341724	1	CAB, Cab CF ELEKTR.
10	06347722	6	Hex bolt M12x70ISO401710.9
11	829-1412	6	NUT, M12, Cl 10, Hex nut M12 ISO4032 10
12	06577060	6	WASHER, Locking washer B12
15	425-114	1	NUT, 1/4"-28, G5, Hex nut 1/4ZOLL -28UNF 8.8
16	06577036	1	WASHER, SPECIAL, Locking washer M6
18	07067064	3	Cable strap ACC38-A-20
19	07068200	7	CABLE, Cable band sw, 1 88x4,8 TSL-190-S
20	07074658	1	CABLE, Cable band 525x8,8TSL-530HD
32	02885372	1	CLAMP, Pipe clip D1-70x25W1-1 DIN3016
33	614-8025	1	BOLT, Hex, M8 x 25, 8.8,
34	825-1408	1	NUT, M8, Cl 8,
35	06577028	1	WASHER, SPECIAL, Locking washer M8
40	06577124	2	WASHER, Locking washer B6
41	825-1408	2	NUT, M8, Cl 8,
42	07081167	2	CLIP, Cable band PRST30S-S14-30
43	01147744	1	GROMMET, Grommet A16x2,5
44	07070043	1	CABLE, Cable band 250x4,8 TSL-250-S

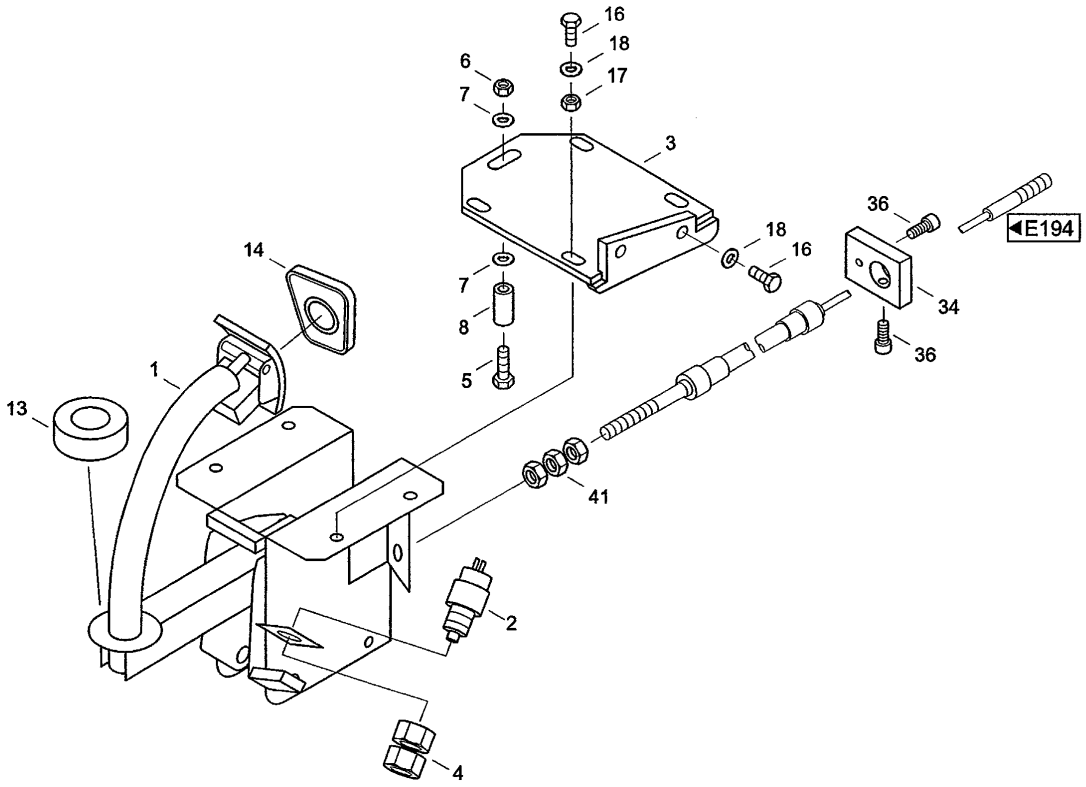

F80Q/F085/0103

255

CF80 CASE IH CROSS FLOW COMBINE

F085 CAB- PARKING BRAKE

Ref	Part Number	Qty	Description
1	04005640	1	PARKING BRAKE, Parking brake
2	31336487	1	SWITCH, Switch
3	31336462	1	PLATE, Mounting plate k
4	31336751	2	NUT, Hex nut M12x1
5	614-10050	1	BOLT, Hex, M10 x 50, 8.8, Full Thd, Hex bolt M10x50 IS04017 8.8
6	825-1410	1	NUT, M10, Cl 8,
8	31339594	1	TUBE SPACER, Spacer tube
13	04193111	1	RING, PACKING, Seal
14	01151146	1	LINING, Pedal cover
16	614-8025	6	BOLT, Hex, M8 x 25, 8.8,
17	POS01001	4	SAFETY NUT, Hex nut M8 DIN985 8
18	895-10008	6	WASHER, M8 x 16 x 1.6, Washer 8,4 DIN125 ST
34	31336470	1	PLATE, LARGE, Retainer plate
36	864-6016	2	SCREW, Hex Soc Hd, M6 x 16, 8.8, Cheese-head screw M6x16DIN9128.8
41	825-1410	3	NUT, M10, Cl 8,
7	895-11010	2	WASHER, M10 x 20 x 2, Washer 10.5DIN125ST

F090(01) CAB- FOOT BRAKE

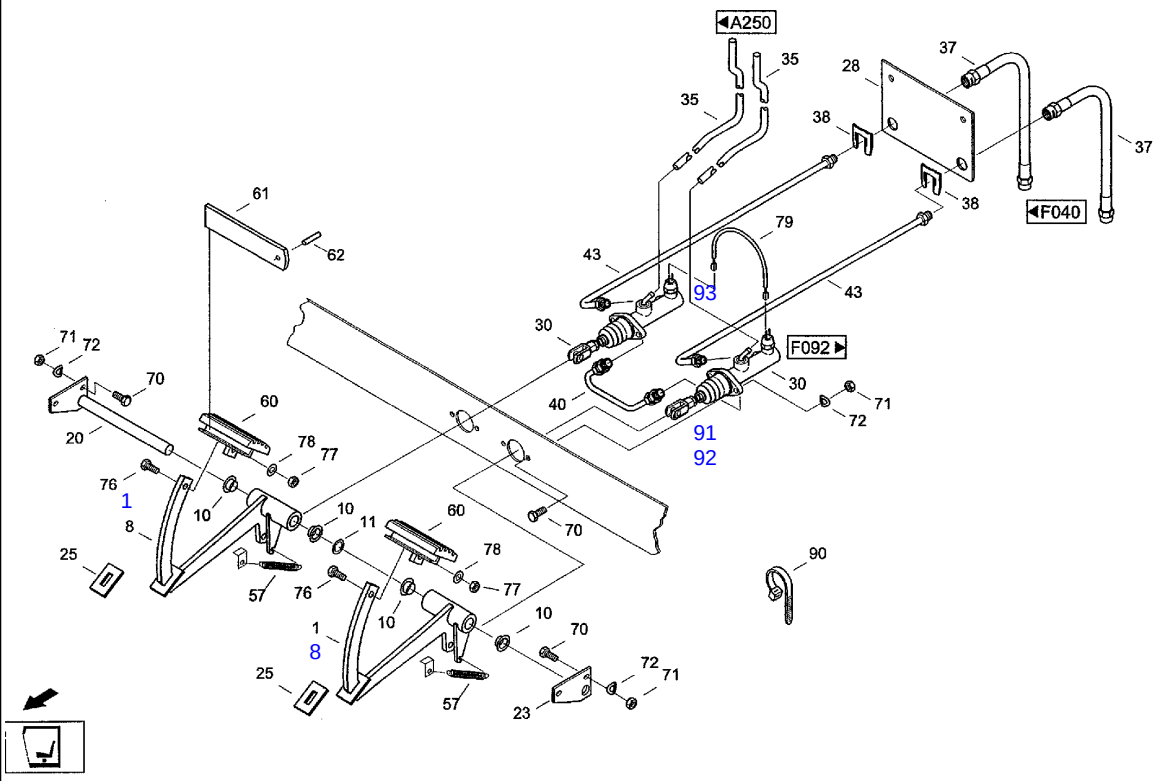

CF80 CASE IH CROSS FLOW COMBINE

F090(01) CAB- FOOT BRAKE

Ref	Part Number		Qty	Description	
1	31326315	2	1	PEDAL, Pedal 1	ф005-08.10.000 кронштейн
8	31326331	2	1	PEDAL, Pedal r	ф005-08.20.000 кронштейн(дополнение поз.1)
10	060534125		4	BEARING, Bushing QFM-2023-21	ф005-08.09.001 втулка
11	060535681		2	DISC, Shim 20x28x1 DIN988	
20	31299296		1	PIN, LARGE, Pedal bearing	ф005-08.30.000 палец
23	31299302		1	PLATE, KNIFE WEAR, Bearing plate	
25	061074396		2	JOINT, RUBBER, Rubber seal	ф005-08.09.004 пластина
28	31307931		1	PLATE, LARGE, Holding plate	
30	04040016		2	CYLINDER, MASTER, Master brake cylinder	
35	04040024		1	HOSE, Return hose 2M	
37	04040032		2	HOSE, LARGE, Brake hose 550mm MIT 2 ARMATUR.M12X1	
38	04012785		4	BRAKE, Brake hose clamp 5B (A51) 29985/05 0830178106	
40	02888334		1	FITTING, Connection hose KABINE	
43	02888383		2	TUBE, Brake tube KABINE	
57	06701195		2	SPRING, TENSION, Tension spring 27,9Odx122	ф005-08.09.005 пружина
60	060534166		2	PEDAL, Pedal	ф005-08.09.006 накладка
61	119903A1		1	PLATE, Bar	ф005-08.09.002 кронштейн
62	31339641		1	SHEET ASSY., Roll pin 3x24 DIN1481	
70	614-8025		10	BOLT, Hex, M8 x 25, 8.8,	
71	06116243		10	NUT, Hex nut M8DIN9858	
72	895-10008		20	WASHER, M8 x 16 x 1.6, Washer 8.4DIN125ST	
76	614-10035		2	SCREW, Hex, M10 x 35, 8.8, Full Thd,	
77	97012032		2	NUT, Hex nut M10 DIN985 8	
78	895-10010		4	WASHER, M10 x 20 x 2, Washer 10.5DIN125ST	
79	021365130		1	CABLE, Brake-light cable	

F090(02) CAB- FOOT BRAKE

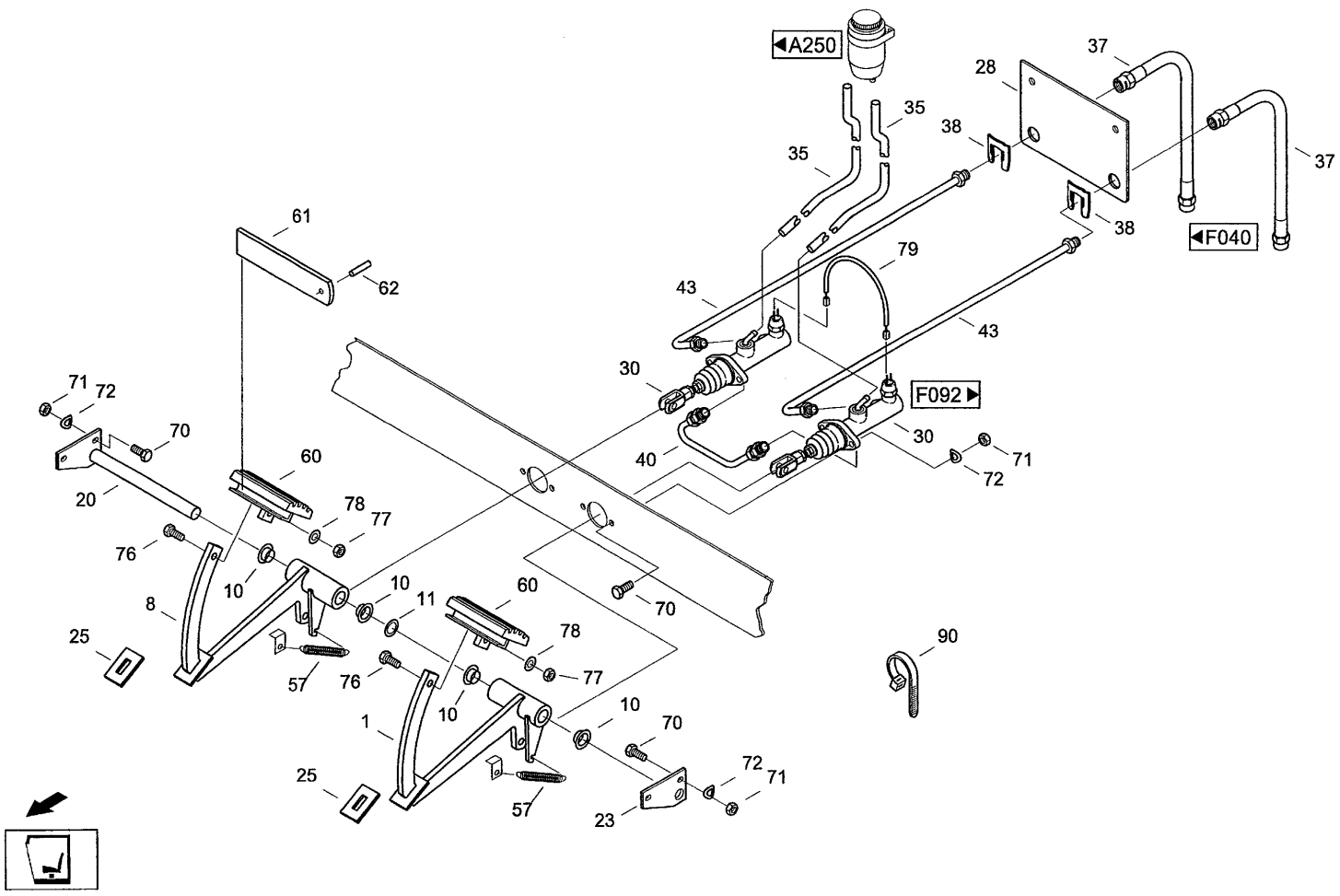

CF80 CASE IH CROSS FLOW COMBINE

F090(02) CAB- FOOT BRAKE

Ref	Part Number	Qty	Description
90	060152467	5	CABLE, Cable band PLT-2S-M30 8711305 4.8X188 MM
91		2	007632236 ПАЛЕЦ
92		2	T100-00.00.001 ВИЛКА
93		2	T100-00.00.005 ШТУЦЕР

F092 CAB- MASTER BRAKE CYLINDER

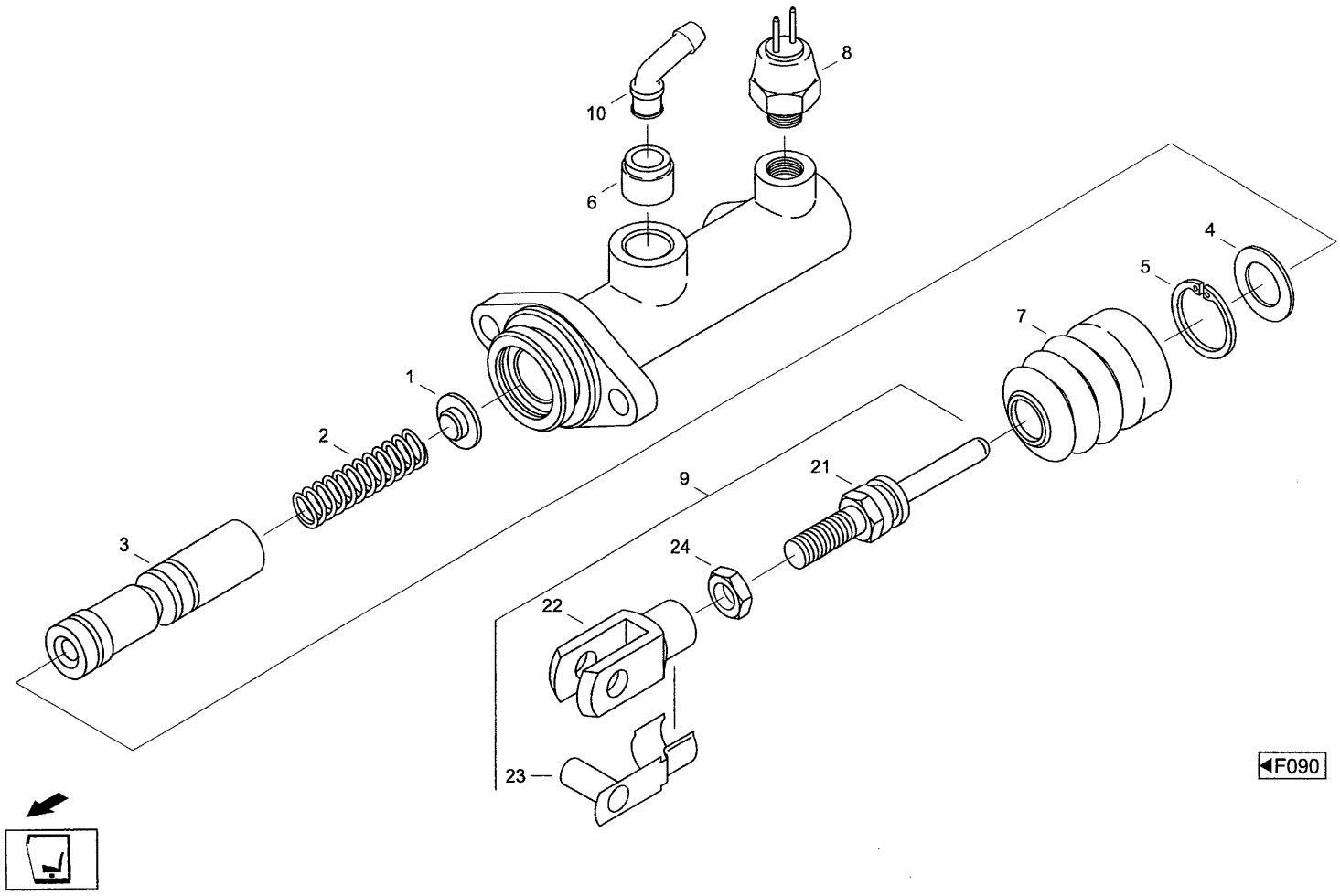

CF80 CASE IH CROSS FLOW COMBINE

F092 CAB- MASTER BRAKE CYLINDER

Ref	Part Number	Qty	Description
1	04040040	2	CUP, SPRING, Spring retainer
2	04040081	2	COMPRESSION SPRING, Pressure spring
3	04040098	2	PISTON ASSY., Piston k
4	04040112	2	WASHER, THRUST, Thrust washer
5	04040120	2	SNAP RING, Snap ring
6	04040137	2	PLASTIC PLUG, Rubber stopper
7	04040145	2	FAIRING, LIGHT, Protection cap
8	04040161	2	SWITCH, Brake-light switch
9	04040178	2	ROD, PISTON, Connecting rod k
10	31355641	2	ELBOW, Elbow assy
21	04040186	2	ROD, PISTON, Connecting rod
22	06174437	2	CRADLE, Yoke 010x20 DIN71752
23	98013390	2	PIN, LARGE, Bolt ES-NORM01 ES 10x20
24	825-1410	2	NUT, M10, Cl 8,

F133(01) CAB- AIR- CONDITIONER [1]

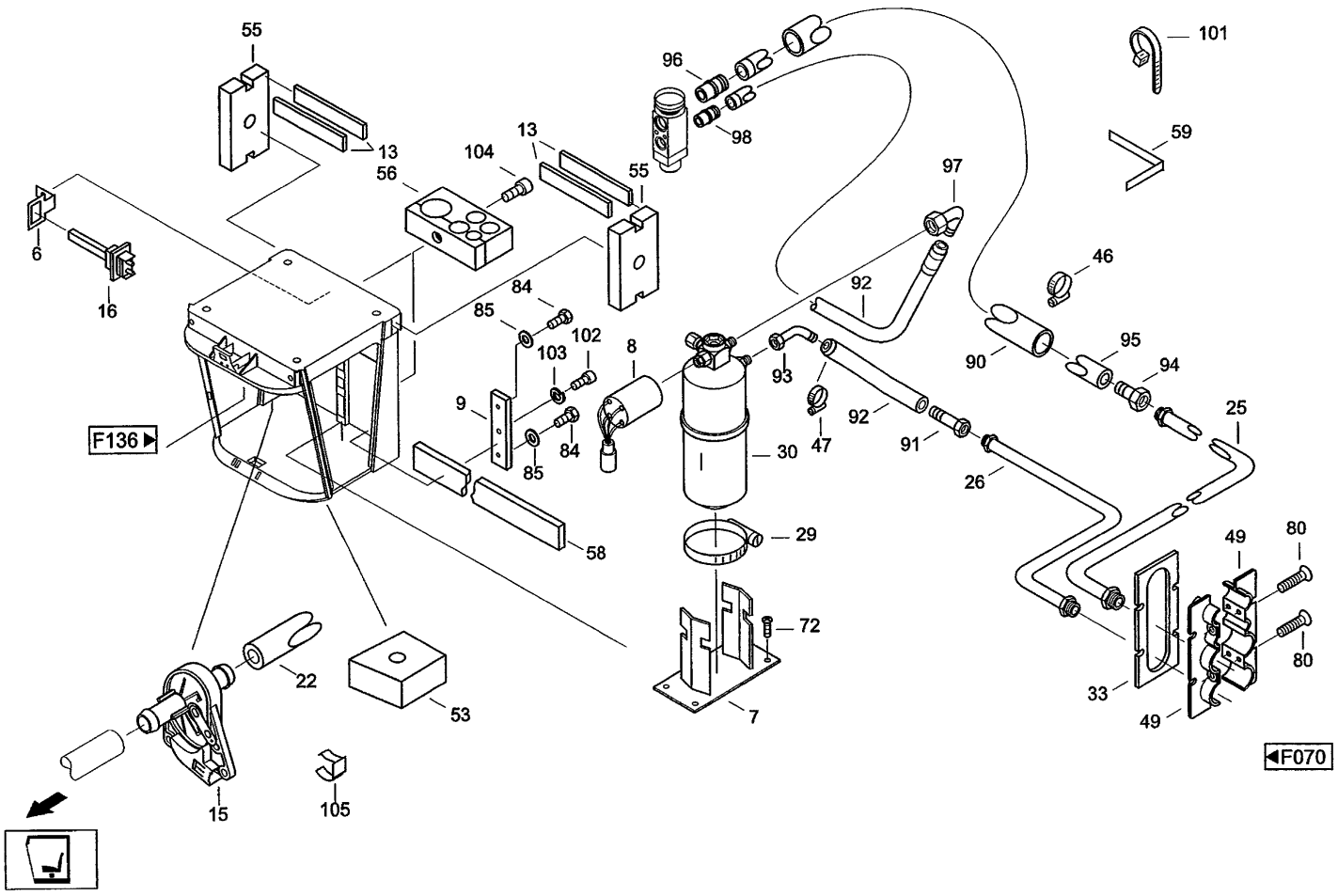

CF80 CASE IH CROSS FLOW COMBINE

F133(01) CAB- AIR- CONDITIONER [1]

Ref	Part Number	Qty	Description
6	31337832	1	HOLDER, Support
7	31337094	1	SUPPORT, Console Trockner
8	31337100	1	PRESSURE SWITCH, Pressure switch
9	31337141	1	PLATE, Attaching plate
13	31336727	4	FILTER, Air cleaner
15	31338858	1	VALVE, Water valve
16	31338794	1	PROBE, Thermocouple
22	31338866	1	HOSE, Water hose 1M
25	31337182	1	LINE, Cpl. pipe k, F.KLIMAANLAGE
26	31337190	1	LINE, Cpl. pipe k, F.KLIMAANLAGE
29	31337414	1	CLAMP, Hose clip
30	31337391	1	EVAPORATOR, Dryer
33	125000A2	1	GASKET, Seal
46	31337422	1	CLAMP, Hose clip
47	31337430	1	CLAMP, Hose clip
49	125264A2	2	CLAMP, Rubber lug
53	31337631	2	MAT, Sealing mat
55	31337656	1	MAT, Sealing mat
56	31337760	2	GUIDE, Plastic bushing
58	31337648	1	STRIP, SEALING, Sealing strip 1M
59	03221323	1	STRIP, PROTECTION, Protective strip
72	614-6016	5	BOLT, Hex, M6 x 16, 8.8,
80	03020302	8	SCREW, Self-tapping screw ST4.2X13-F-H DIN7981 A3R(SCHW
84	97007317	2	SCREW, Cheese-head screw M5x16DIN69128.8
85	03020415	2	WASHER, Washer A5,3 DIN125 ST

F133(02) CAB- AIR- CONDITIONER [1]

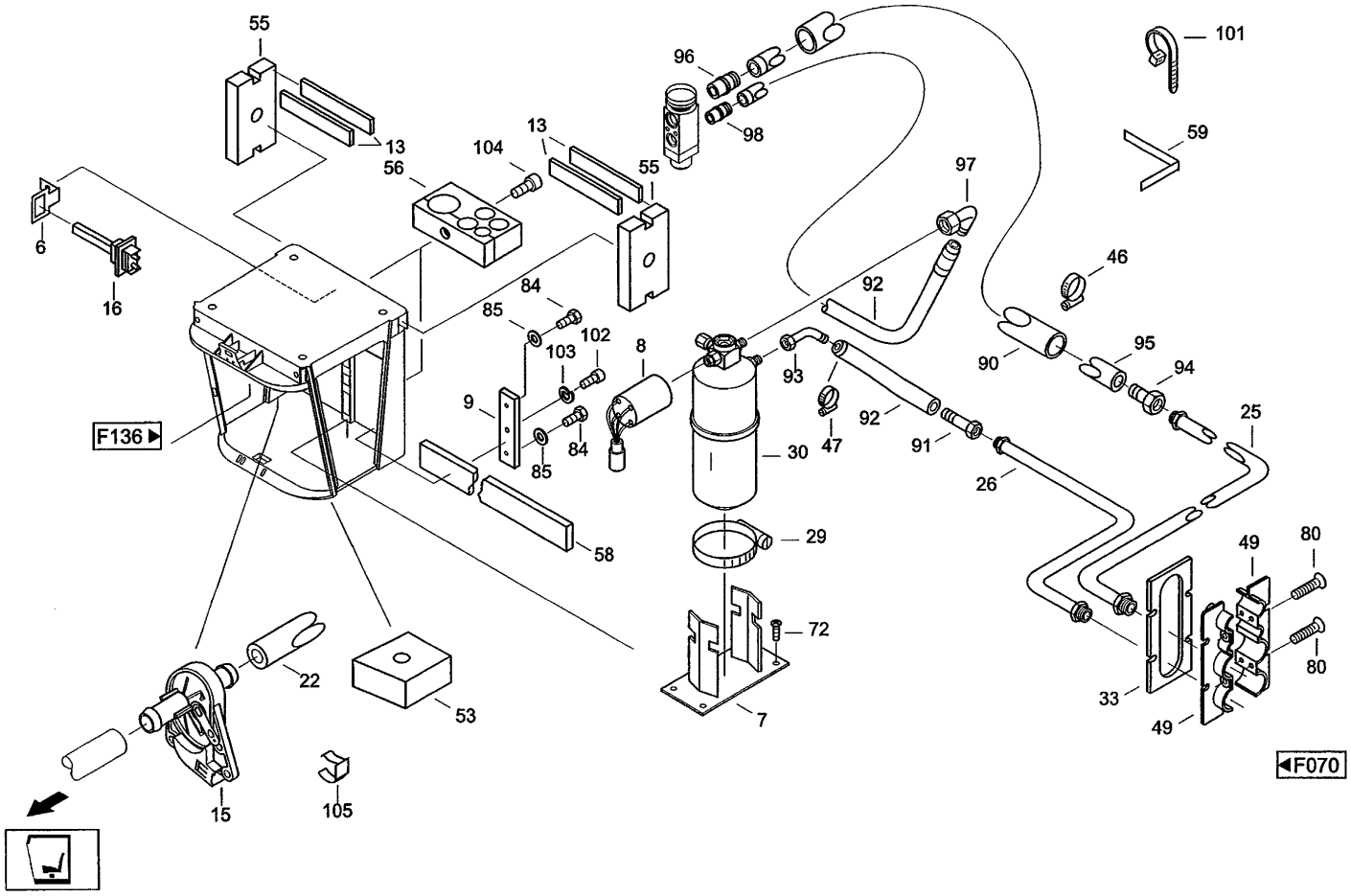

CF80 CASE IH CROSS FLOW COMBINE

F133(02) CAB- AIR- CONDITIONER [1]

Ref	Part Number	Qty	Description
90	31338882	1	HOSE, Insulating hose 1M
91	31338720	1	FITTING, Instrument
92	31337326	1	HOSE, Hose 1M
93	31338737	1	FITTING, Instrument
94	31338712	1	FITTING, Instrument
95	31337334	1	HOSE, Hose 1M
96	31338753	1	FITTING, Instrument
97	31338704	1	FITTING, Instrument
98	31338745	1	FITTING, Instrument
101	31338817	30	CLAMP, Cable strep
102	03020392	1	SCREW, Cheese-head screw M4x16DIN9128.8
103	06454975	1	WASHER, LOCK, Spring washer A4 DIN 128 FST
104	864-6055	2	SCREW, Hex Soc Hd, M6 x 55, 8.8, Cheese-head screw M6x55DIN9128.8
105	31339600	1	CLASP, Rubber lug F.Bowdenzug

F136(01) CAB- AIR- CONDITIONER [2]

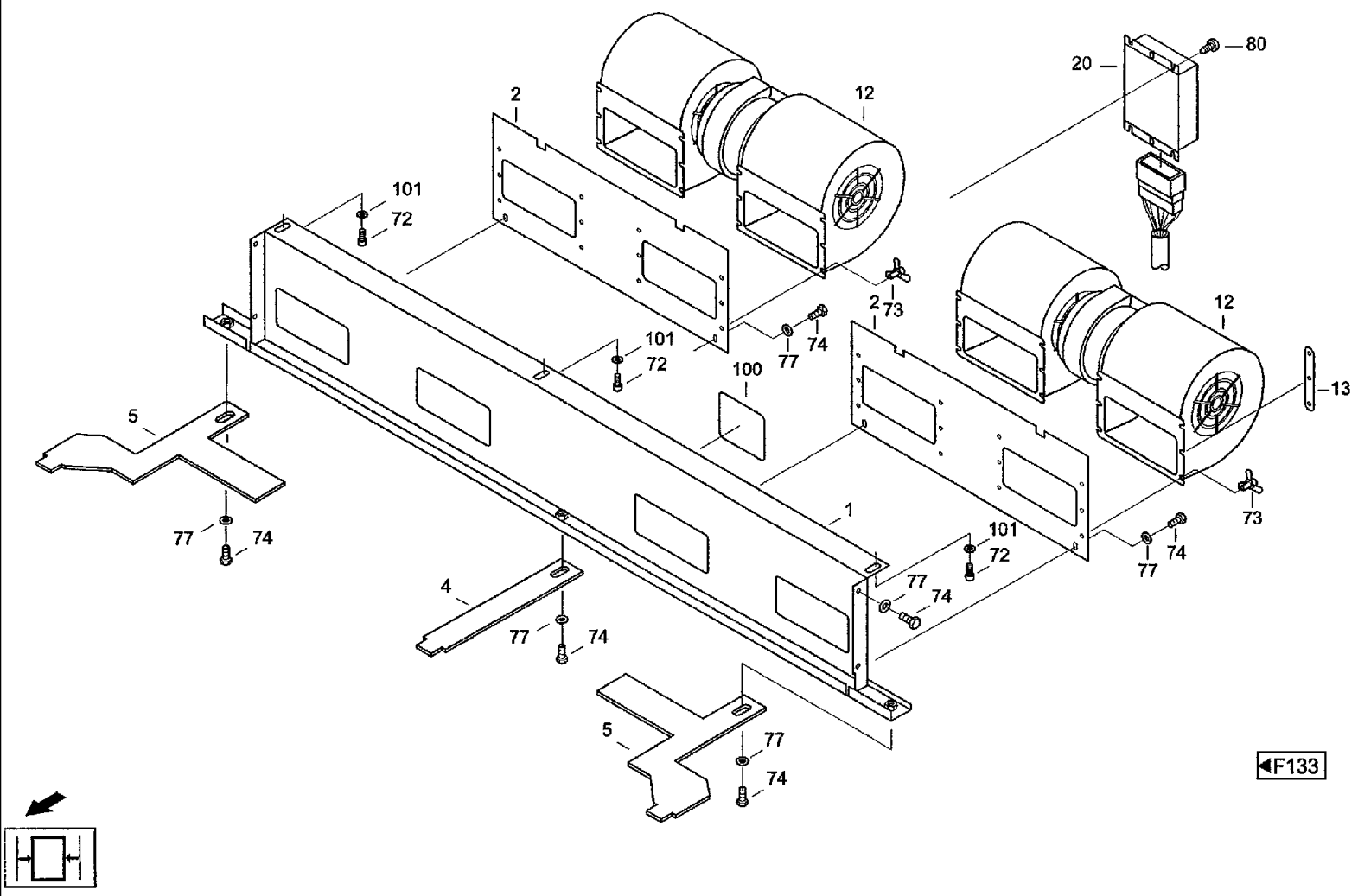

CF80 CASE IH CROSS FLOW COMBINE

F136(01) CAB- AIR- CONDITIONER [2]

Ref	Part Number	Qty	Description
1	31337793	1	SUPPORT, Air duct k
2	31337246	2	SUPPORT, Fan holder
3	31337808	1	SUPPORT, Support
4	31337873	1	SUPPORT, Support
5	31337133	2	SUPPORT, Support
10	31337174	1	EVAPORATOR, Evaporator
11	31337728	1	PAN, Water tub
12	31337301	1	BLOWER, Fan
13	31337318	8	SUPPORT, Holder
14	31337406	6	CLAMP, Hose clip
16	31338794	1	PROBE, Thermocouple
17	31338874	1	VALVE, Expansion valve
18	31337383	1	HOLDER, Holder
19	31337375	1	HOLDER, Valve holder
20	31337125	1	THERMOSTAT, Thermostat 12/24V
23	31337672	1	HOSE, PVC spiral hose 1MNW12
28	31337463	2	GROMMET, Grommet
34	31337535	1	MAT, Sealing mat
35	31337937	1	GASKET, Seal 1M
36	31338833	1	BAND, Cell polyethylene 1M
37	31338825	1	BAND, Cell polyethylene 1M
38	31338841	1	FOAM, PUR foam 1M
40	31337736	1	RESTRICTOR, Male connector
41	31337543	2	SEAL, Seal
42	31337117	2	HOSE, Water hose

CF80 CASE IH CROSS FLOW COMBINE

F136(02) CAB- AIR- CONDITIONER [2]

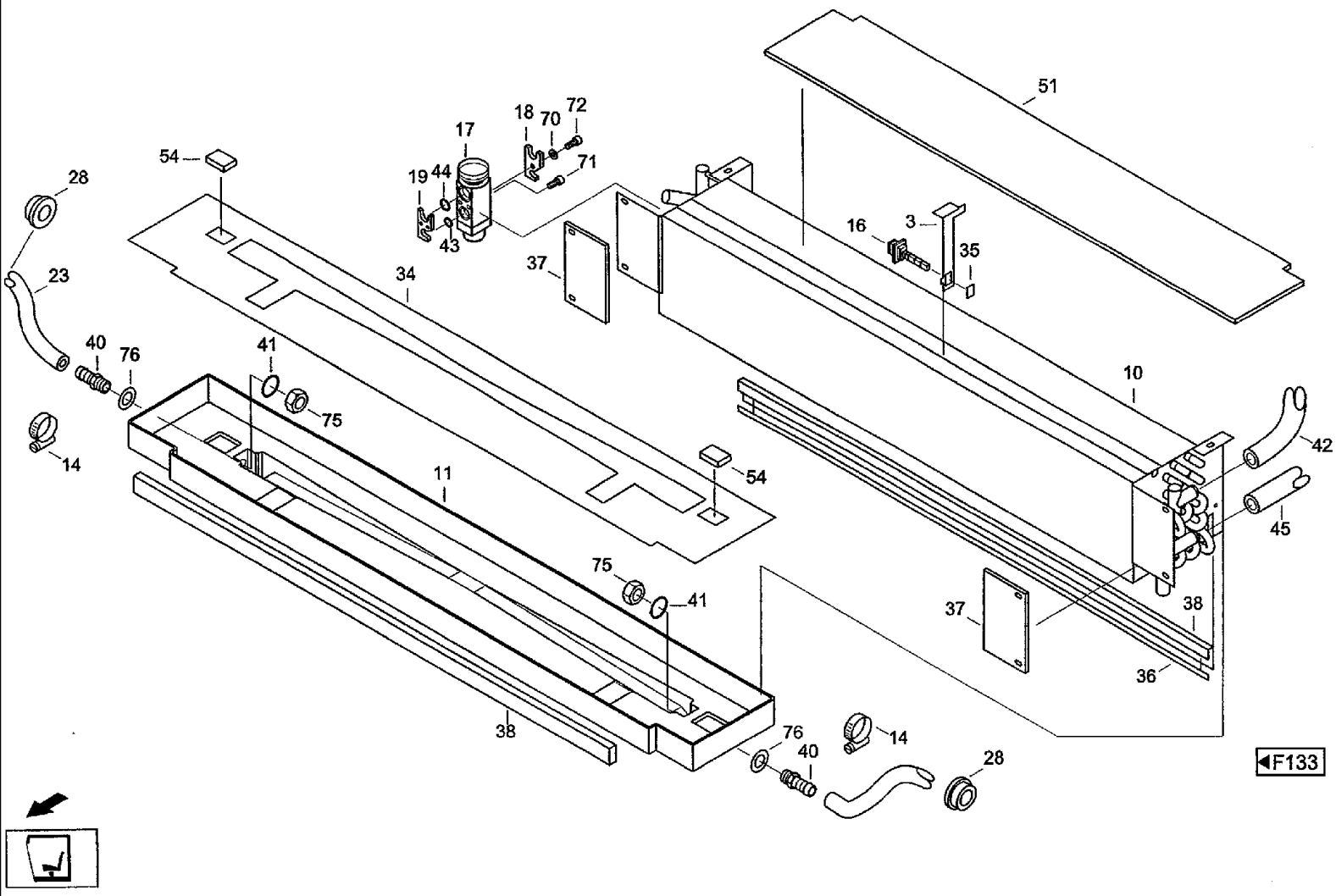

CF80 CASE IH CROSS FLOW COMBINE

F136(02) CAB- AIR- CONDITIONER [2]

Ref	Part Number	Qty	Description
43	31337455	1	GASKET, Seal
44	31337447	1	GASKET, Seal
45	31338786	4	HOSE, Intermediate piece
51	31337623	1	MAT, Sealing mat
54	31337295	1	MAT, Filter mat 1M
70	892-11006	1	WASHER, LOCK, M6, Spring washer A6 DIN127 FST
71	864-5040	2	SCREW, Hex Soc Hd, M5 x 40, 8.8, Cheese-head screw M5X40DIN9128.8
72	614-6016	6	BOLT, Hex, M6 x 16, 8.8,
73	31337881	24	RIVET, Rivet 4,1x20,3
74	614-5016	15	BOLT, Hex, M5 x 16, 8.8, Full Thd, Hex bolt M5x16 ISO4017 8.8
75	829-4416	2	NUT, Thin, M16 x 2, Cl 05, Hex nut M16ISO403505
76	06655292	2	SHIM, Shim 17x24x1 DIN988
77	895-11005	15	WASHER, M5 x 10 x 1, Washer 5,3 DIN125 ST
80	03020407	4	SCREW, Fillister head screw M4X8-HDIN79854.8
100	31337287	1	TAG, Label Typenschild
101	895-11006	5	WASHER, M6, Washer 6,4 DIN125 ST

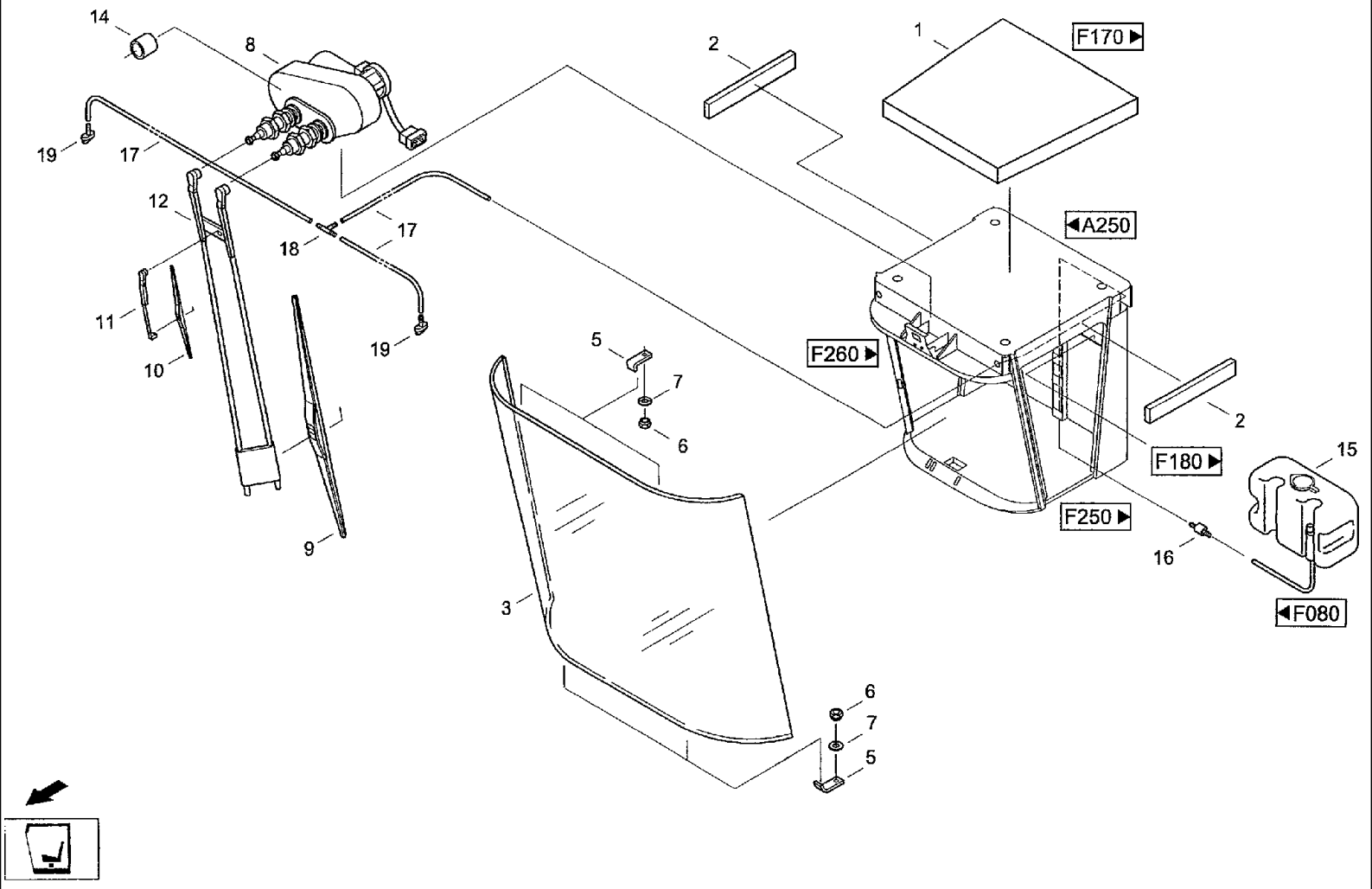
14
8
19
17
12
18
17
11
10
19
9
2
1
F170
A250
F260
5
7
6
2
F180
15
F250
16
F080
3
6
7
5

CF80 CASE IH CROSS FLOW COMBINE

F160 CAB- WINDSHIELD, WINDSHIELD WIPER

Ref	Part Number	Qty	Description
1	31336702	1	INSULATOR, RUBBER, Insulator
2	31336710	2	INSULATOR, RUBBER, Insulator
3	116809A5	1	WINDSHIELD, Windshield
5	117707A2	4	CLAMP, Rubber lug
6	POS01001	4	SAFETY NUT, Hex nut M8 DIN985 8
7	895-11008	4	WASHER, M8 x 16 x 1.6, Washer 8,4 DIN125 ST
8	31336647	1	WIPER MOTOR, Wiper motor
9	31336655	1	BLADE, WIPER, Wiper blade 1000mm
10	31336663	1	BLADE, WIPER, Wiper blade 330mm
11	31336688	1	WIPER ARM, Wiper arm EINFACH
12	31336671	1	WIPER ARM, Wiper arm PARALLELOGRAMM
14	31337664	2	SLEEVE, Spacer sleeve
15	07088028	1	RESERVOIR, Washing box M.PUMPE
16	07088036	1	POPPET, VALVE, Valve check
17	07076715	1	HOSE, LARGE, Rubber hose
18	07076731	1	TEE, Piece
19	07088052	2	JET, Spray nozzle

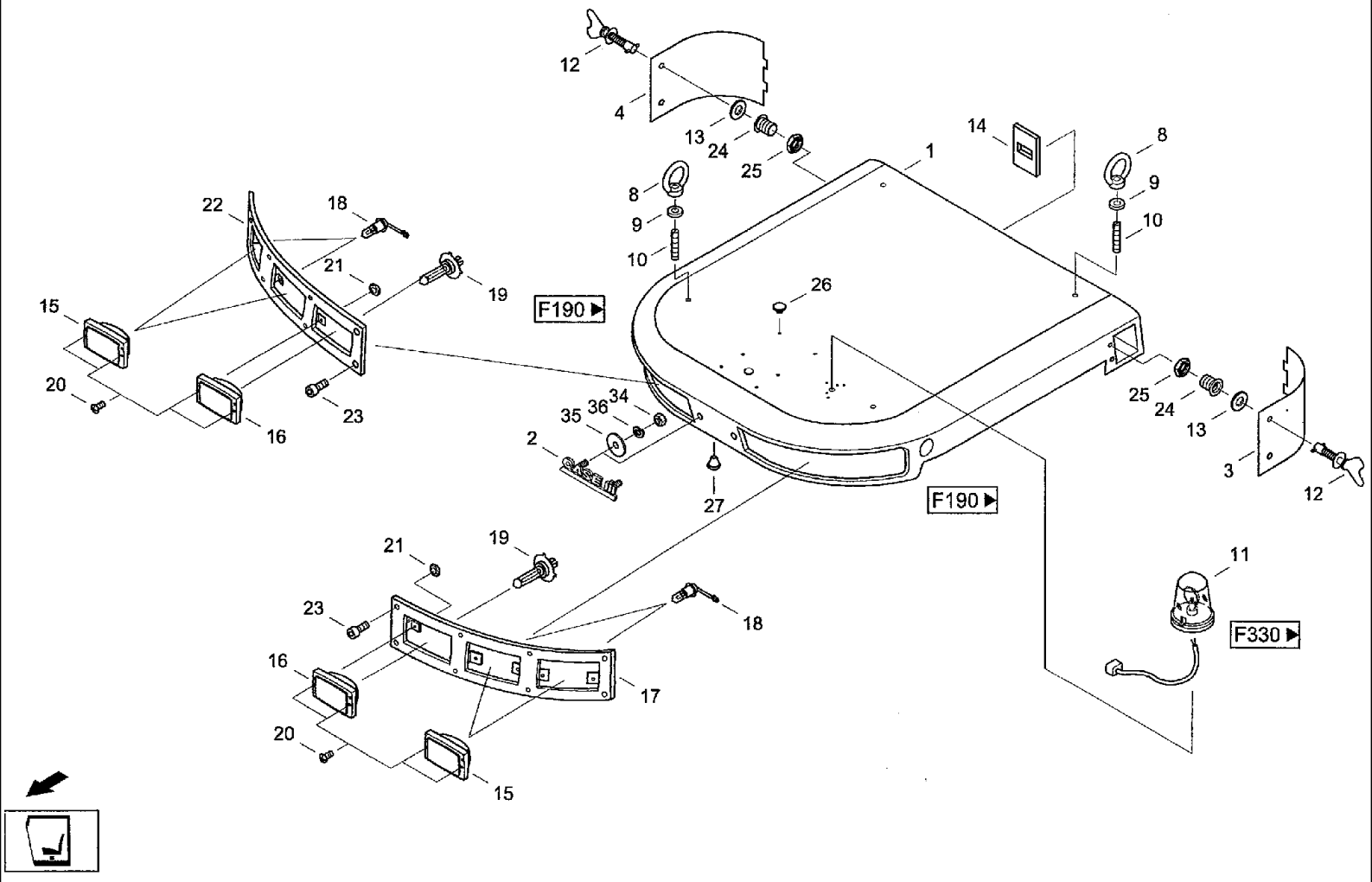
12
4
13
24
25
14
8
9
10
1
22
18
21
19
15
20
16
23
F190
26
35
36
34
2
27
F190
25
24
13
3
12
21
19
23
18
16
17
20
15
11
F330

CF80 CASE IH CROSS FLOW COMBINE

F170(01) CAB- ROOF

Ref	Part Number	Qty	Description
1	03221637	1	ROOF, Plastic roof
2	03221748	1	EMBLEM, Emblem
3	03221638	1	COVER, Air filter covering l
4	03221639	1	COVER, Air filter covering r
8	DF005098	4	NUT, Ring nut M12DIN582
9	31335252	4	WASHER, Cover disk
10	06057377	4	PIN, Threaded pin M12x50DIN91345H
11	07035506	1	Rotary lamp ge, GHE1 520300
12	03221648	4	SCREW, Closing spigot
13	31336366	4	WASHER, Holding disk
14	31335228	6	MAT, Sealing mat
15	060507067	4	LIGHT, WORK, Work light
16	07090385	2	HEADLIGHT, Built-in headlamp
17	31336333	1	GRILLE, Panel
18	07034997	4	BULB, Filament lamp H3-55W-12V DIN72601
19	07073874	2	BULB, Filament lamp H412V60/55WDIN72601
20	060519368	12	SCREW, Self-tapping screw ST DIN7981 4.2X32-F-H
21	05810280	12	STEEL SHEET NUT, Nut ST4.2-ZN
22	31335203	1	GRILLE, Panel
23	97007317	12	SCREW, Cheese-head screw M5x16DIN69128.8
24	03221650	4	CAM, Cam
25	03221651	4	NUT, Nut
26	03221652	8	PLUG, Stopper D8
27	03221653	1	GROMMET, Grommet gr, 14/20
34	825-1406	2	NUT, M6, Cl 8,

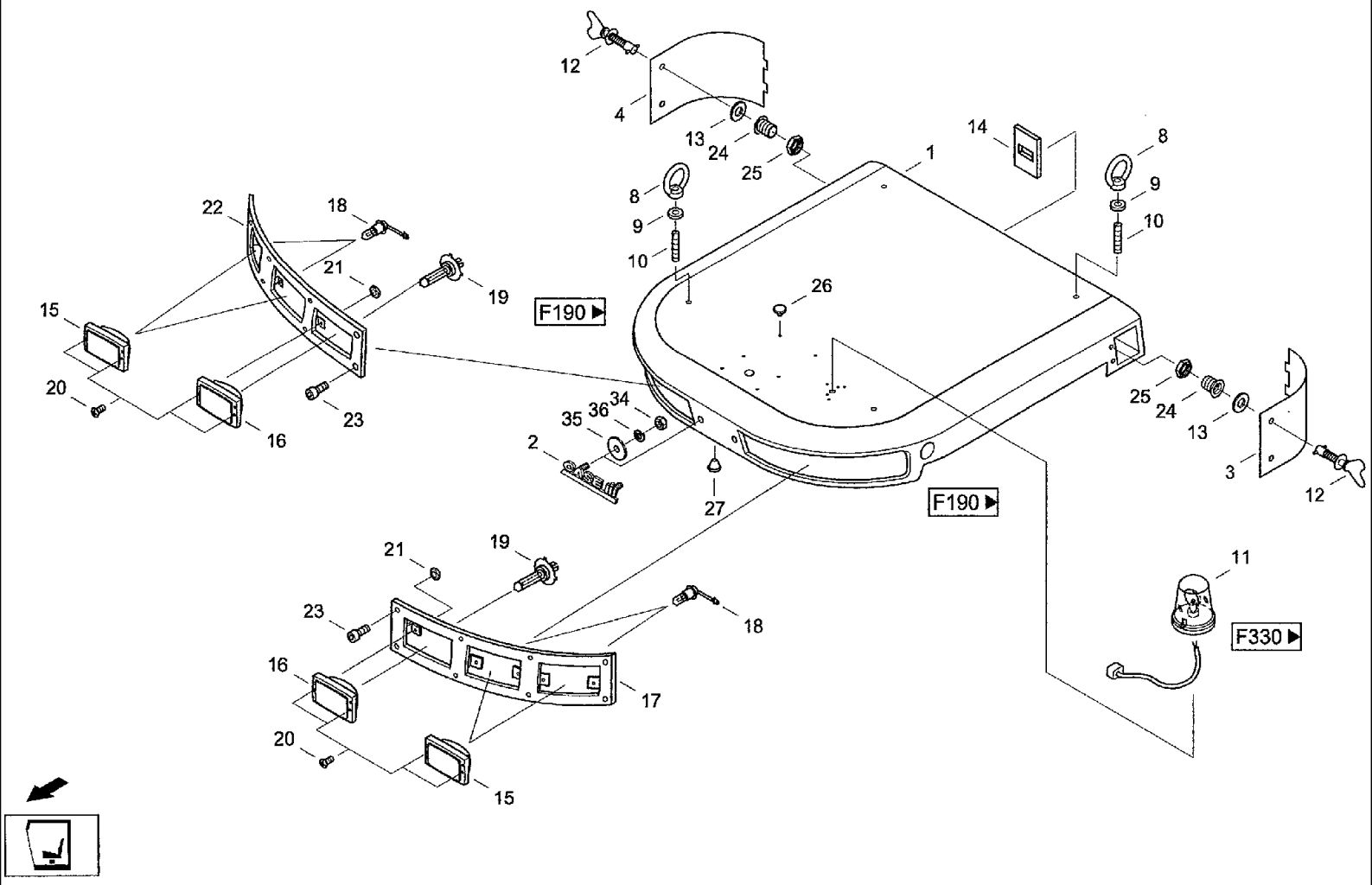
12
4
13
24
25
14
8
9
10
1
22
18
21
19
15
20
16
23
F190
26
35
36
34
2
27
F190
25
24
13
3
12
21
19
23
18
16
17
20
15
11
F330

CF80 CASE IH CROSS FLOW COMBINE

F170(02) CAB- ROOF

Ref	Part Number	Qty	Description
35	06502888	2	WASHER, Washer R6.6DIN440100HV
36	892-11006	2	WASHER, LOCK, M6, Spring washer A6DIN127FST

F180 CAB- WINDOW, REAR

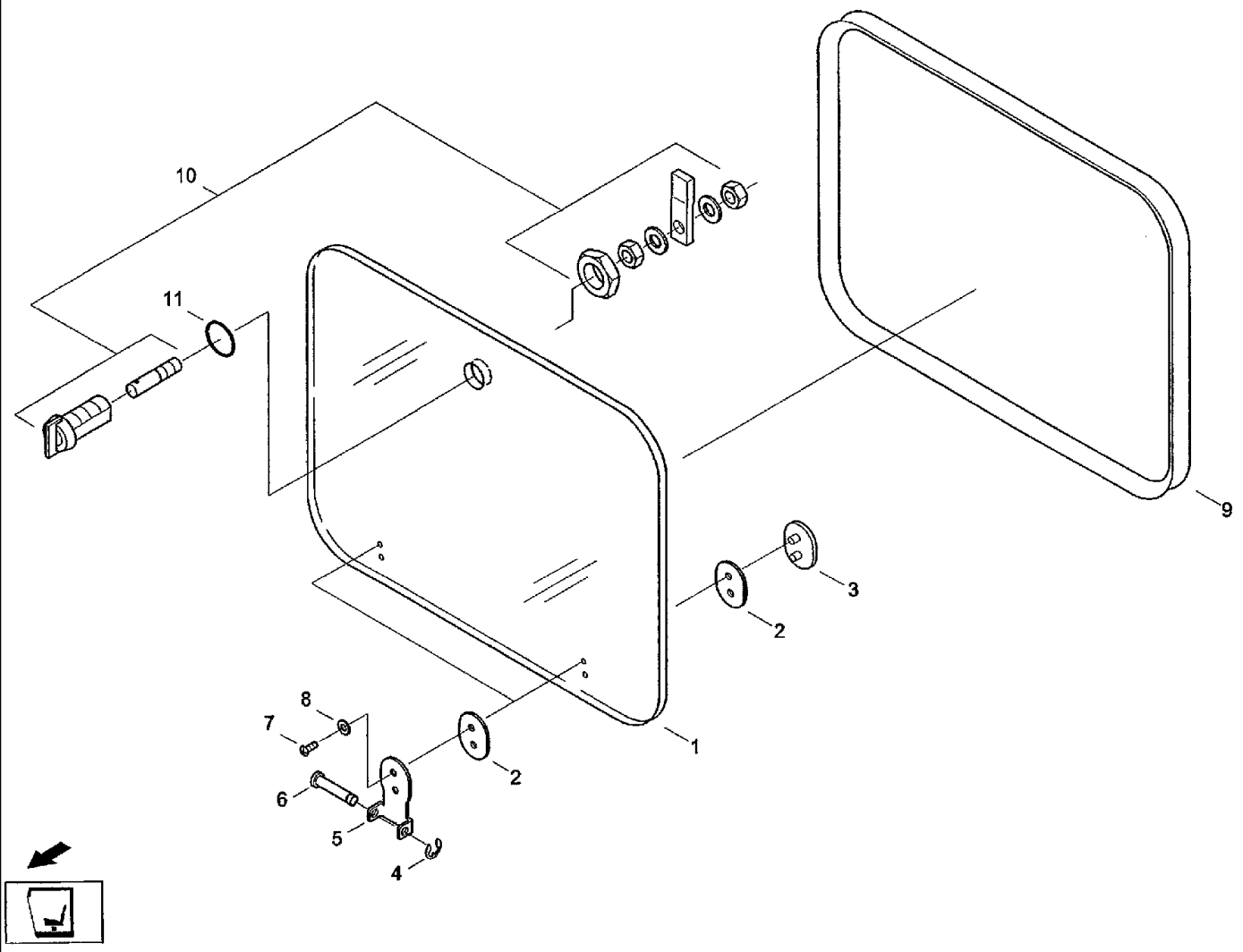

CF80 CASE IH CROSS FLOW COMBINE

F180 CAB- WINDOW, REAR

Ref	Part Number	Qty	Description
1	31333113	1	GLASS, Window, rear
2	31336591	4	WASHER, RUBBER, Rubber seal
3	31333105	2	PLATE, Retaining plate
4	800-315	2	CIRCLIP, M5, Locking plate 4 DIN6799 FST
5	31335244	2	HOLDER, Rear window holder
6	31336743	2	PIN, LARGE, Bolt
7	060530974	4	SCREW, Fillister head screw M5x8-H DIN7985 5.8
8	895-11005	4	WASHER, M5 x 10 x 1, Washer 5.3DIN125ST
9	31336124	1	SEAL, WINDOW, Sealing profile 1M 15,5x24,75
10	31336116	1	LATCH, Latching device
11	01130656	1	O-RING, 0-ring 14,00x1, 78 NBR70SHORE

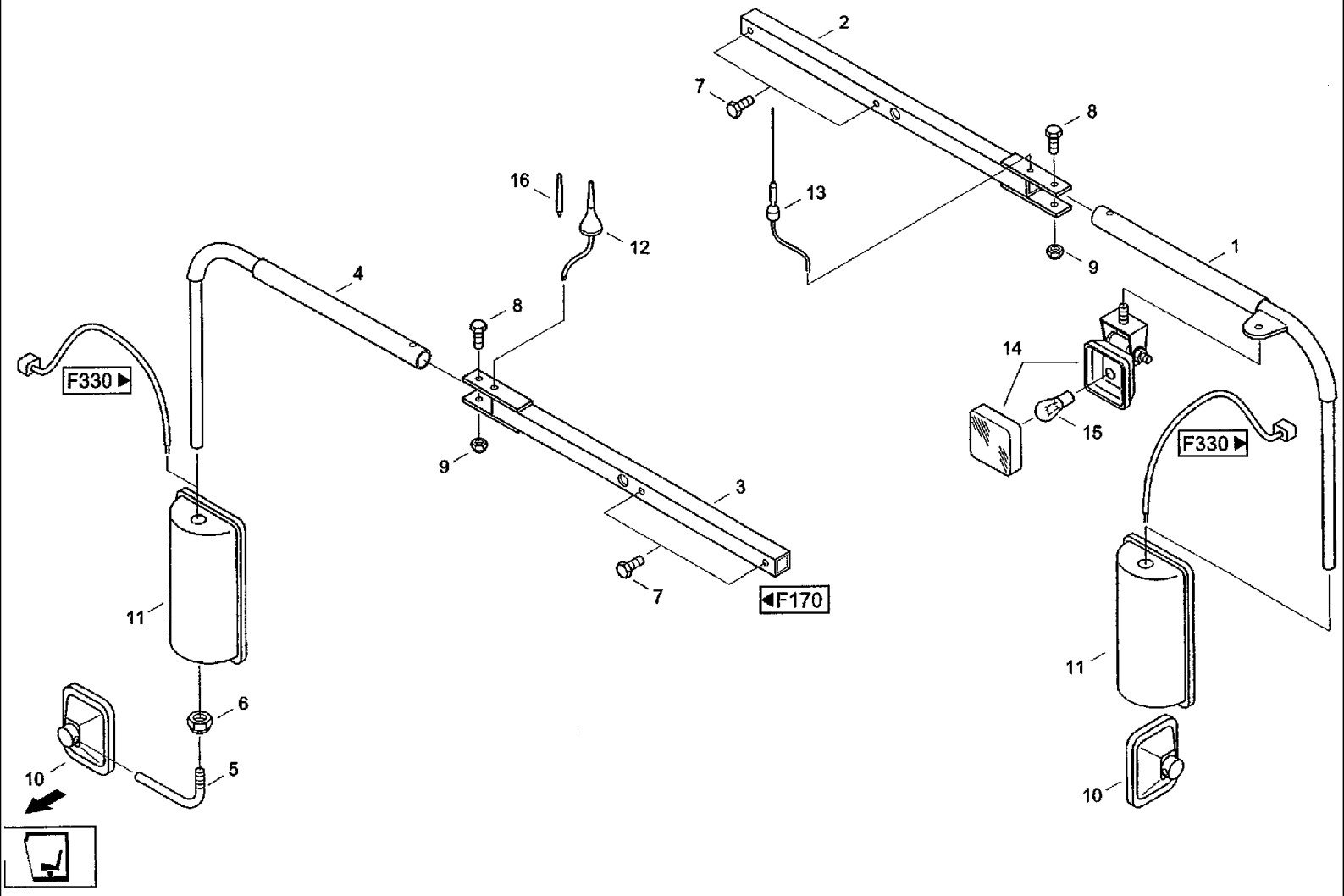
2
7
8
16
13
12
1
4
9
8
14
F330
15
F330
9
3
11
7
F170
11
6
10
5
10

CF80 CASE IH CROSS FLOW COMBINE

F190 CAB- REAR VIEW MIRROR, ANTENNA

Ref	Part Number	Qty	Description
1	31336173	1	ARM, Mirror bracket k, l
2	31336181	1	ARM, External mounting rod
3	31336341	1	ARM, External mounting rod
4	31336204	1	ARM, Mirror bracket k, r
5	31336198	1	ARM, Mirror bracket l, UNTEN
6	825-1416	1	NUT, M16, Cl 8,
7	614-12030	4	BOLT, Hex, M12 x 30, 8.8, Hex bolt M12X30ISO40178.8
8	06347714	2	SCREW, Hex bolt M12x75 IS04017 8.8
9	06116235	2	NUT, Hex nut M12DIN9858
10	31336237	2	MIRROR, Mirror
11	31336220	2	MIRROR, Mirror
12	31336140	1	ANTENNA, Antenna FUNK
13	31336157	1	ANTENNA, Antenna RADIO
14	31336165	1	LIGHT, Work light
15	07034997	1	BULB, Filament lamp H3-55W-12VDIN72601
16	31336245	1	BAR ASSY., Antenna rod

F200(01) CAB- FLOOR MAT, INSULATOR

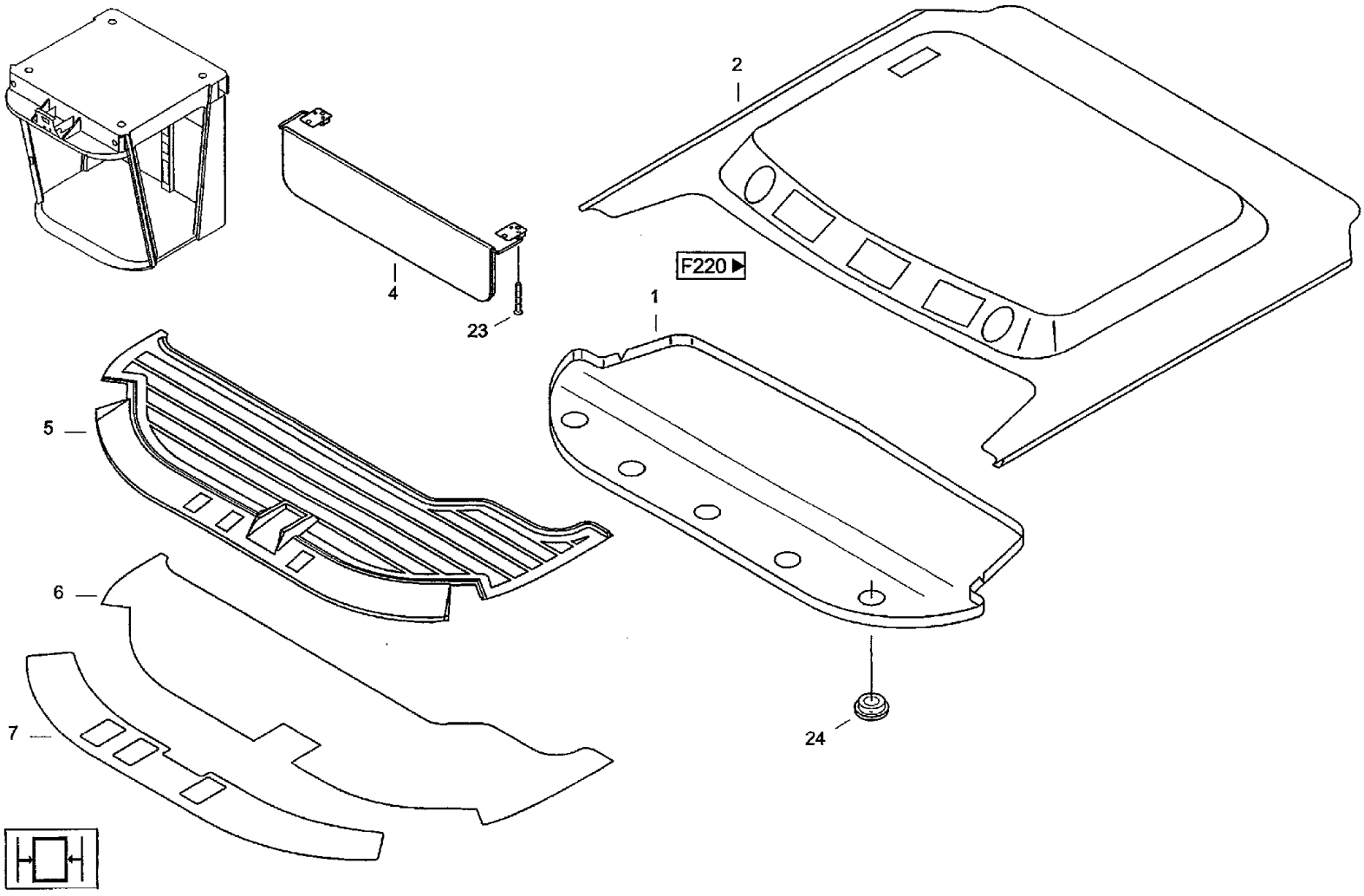

CF80 CASE IH CROSS FLOW COMBINE

F200(01) CAB- FLOOR MAT, INSULATOR

Ref	Part Number	Qty	Description
1	31336253	1	LINING, ROOF, Interior lining
2	31336278	1	LINING, ROOF, Interior lining
3	31335236	1	LINING, ROOF, Interior lining
4	123452A1	1	VISOR, SUN, Sun visor
5	132228A1	1	MAT, Floor mat
6	136484A1	1	MAT, Dead sounding
7	31335211	1	SHEET, SEAL, Dead sounding
8	31335197	1	PADDING, Interior lining
9	31335180	1	PADDING, Interior lining
10	31336286	1	SHEET, SEAL, Dead sounding
11	31336630	1	SHEET, SEAL, Dead sounding
12	31336501	2	SHEET, SEAL, Dead sounding
13	31336518	1	SHEET, SEAL, Dead sounding
14	31336526	1	SHEET, SEAL, Dead sounding
15	31336534	1	SHEET, SEAL, Dead sounding
16	31336542	1	SHEET, SEAL, Dead sounding
19	31336550	1	COVER, PROTECTIVE, Cover
20	31336567	1	RIVET, Rivet
21	31336575	1	ANGLE, Angle
22	31336583	1	ANGLE, Angle
23	03020384	4	SCREW, Raised countersunk head screw M6x30-H DIN966 5.8
24	31336606	5	DIFFUSER, Ejection nozzle

F200(02) CAB- FLOOR MAT, INSULATOR

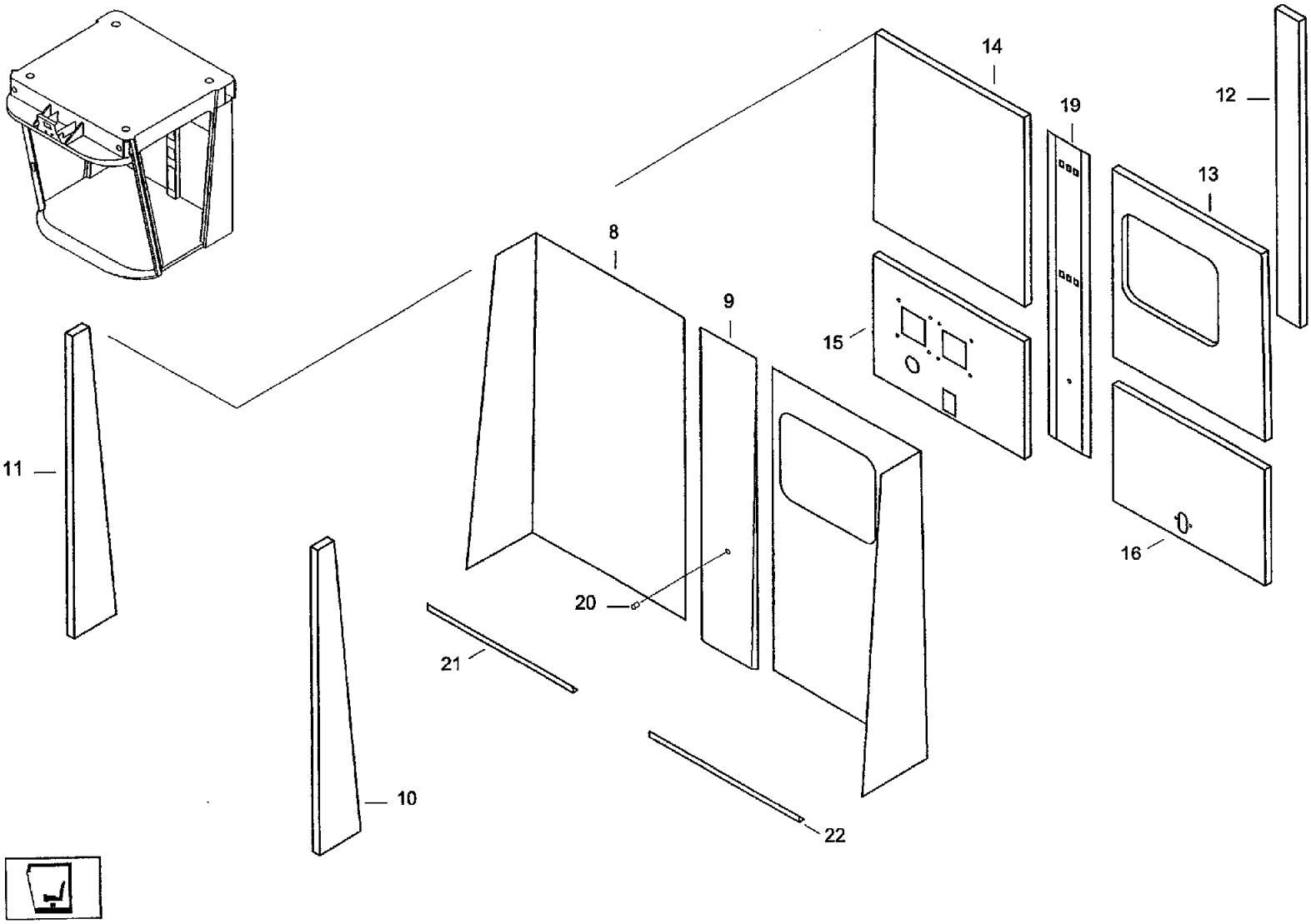

CF80 CASE IH CROSS FLOW COMBINE

F200(02) CAB- FLOOR MAT, INSULATOR

Ref	Part Number	Qty	Description
1	31336253	1	LINING, ROOF, Interior lining
2	31336278	1	LINING, ROOF, Interior lining
3	31335236	1	LINING, ROOF, Interior lining
4	123452A1	1	VISOR, SUN, Sun visor
5	132228A1	1	MAT, Floor mat
6	136484A1	1	MAT, Dead sounding
7	31335211	1	SHEET, SEAL, Dead sounding
8	31335197	1	PADDING, Interior lining
9	31335180	1	PADDING, Interior lining
10	31336286	1	SHEET, SEAL, Dead sounding
11	31336630	1	SHEET, SEAL, Dead sounding
12	31336501	2	SHEET, SEAL, Dead sounding
13	31336518	1	SHEET, SEAL, Dead sounding
14	31336526	1	SHEET, SEAL, Dead sounding
15	31336534	1	SHEET, SEAL, Dead sounding
16	31336542	1	SHEET, SEAL, Dead sounding
19	31336550	1	COVER, PROTECTIVE, Cover
20	31336567	1	RIVET, Rivet
21	31336575	1	ANGLE, Angle
22	31336583	1	ANGLE, Angle
23	03020384	4	SCREW, Raised countersunk head screw M6x30-H DIN966 5.8
24	31336606	5	DIFFUSER, Ejection nozzle

F210(01) CAB- OPERATING AND DISPLAY UNIT, ATTACHING

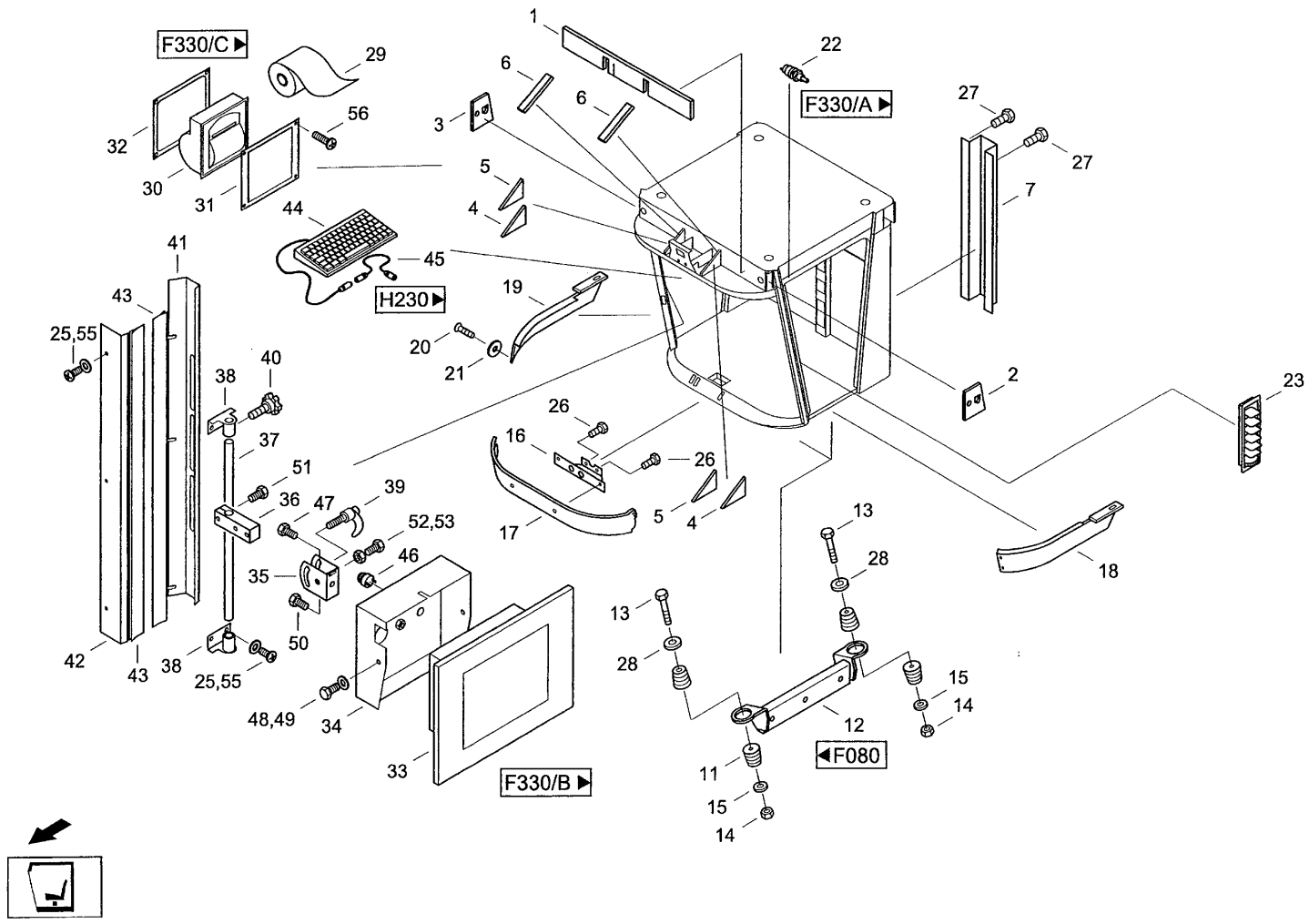

CF80 CASE IH CROSS FLOW COMBINE

F210(01) CAB- OPERATING AND DISPLAY UNIT, ATTACHING

Ref	Part Number	Qty	Description
1	31337615	1	INSULATOR, RUBBER, Insulator
2	31337592	1	INSULATOR, RUBBER, Insulator
3	31337584	1	INSULATOR, RUBBER, Insulator
4	31337576	2	INSULATOR, RUBBER, Insulator
5	31337568	2	INSULATOR, RUBBER, Insulator
6	31337551	2	INSULATOR, RUBBER, Insulator
7	31337816	1	GROMMET, Cable conduit
8	31337262	1	INDICATOR, Operating and display unit MECHAN.BODENKOP.
9	31337824	1	SLIPPER, Connecting link
10	31337213	1	SET SCREW, Star handle bolt M6x15
11	123566A1	8	ISOLATOR, Rubber bearing
12	31337254	2	HOLDER, Cab carrier
13	814-16160	4	BOLT, Hex, M16 x 160, 8.8, Hex bolt M16x160 ISO4014 8.8
14	DF004776	4	NUT, Hex nut M16 DIN985 8
15	06502806	4	WASHER, Washer R17.5DIN440100HV
16	120143A4	1	SUPPORT, Support
17	120140A2	1	COVER, Cap
18	31337744	1	PLATE, Apron l
19	31337752	1	PLATE, Apron r
20	614-6016	6	BOLT, Hex, M6 x 16, 8.8,
21	895-25005	6	WASHER, M5 x 15 x 1.6, Washer 5,3 DIN9021 140HV
22	31337205	1	SWITCH, Switch
23	31337680	11	DIFFUSER, Diffuser
24	31340104	2	SLIPPER, Rocker
25	03020456	6	SCREW, Hex bolt M5x12-C-ZDIN7500ST

F210(02) CAB- OPERATING AND DISPLAY UNIT, ATTACHING [CF80K]

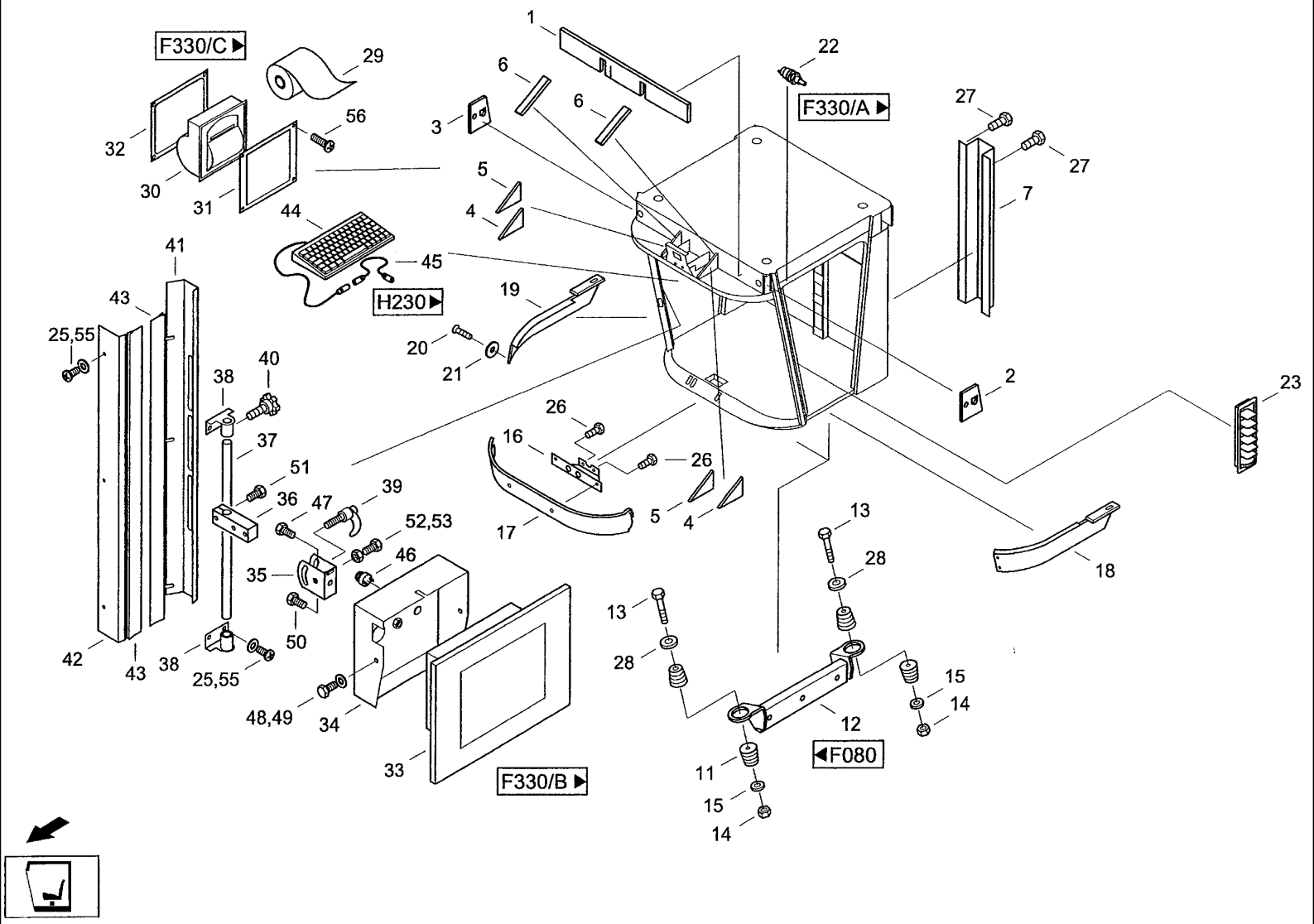

CF80 CASE IH CROSS FLOW COMBINE

F210(02) CAB- OPERATING AND DISPLAY UNIT, ATTACHING [CF80K]

Ref	Part Number	Qty	Description
56	03245287	4	Fillister head screw M5x20 DIN7985 D/F-011 24043

F210(03) CAB- OPERATING AND DISPLAY UNIT, ATTACHING [CF80K]

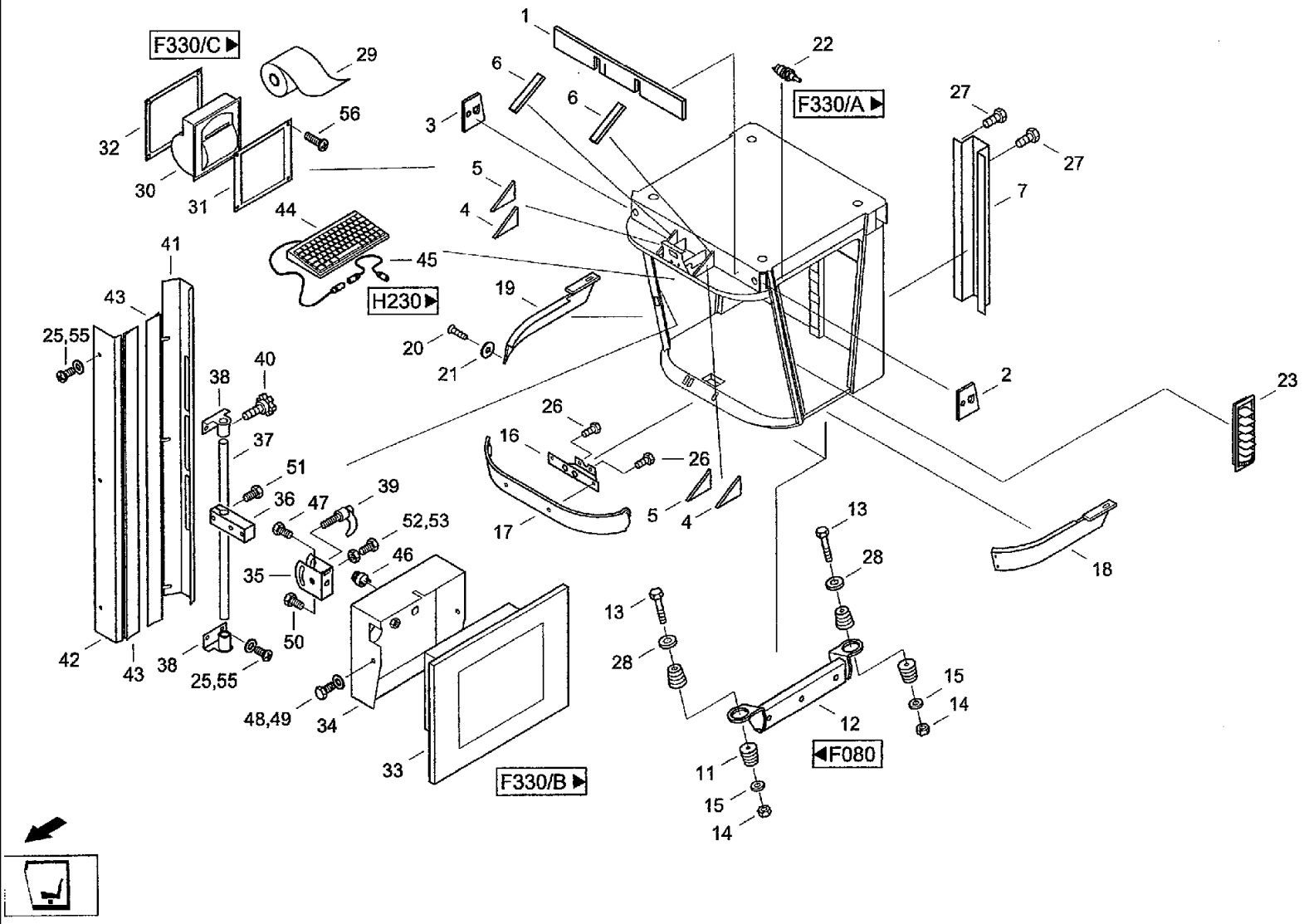

CF80 CASE IH CROSS FLOW COMBINE

F210(03) CAB- OPERATING AND DISPLAY UNIT, ATTACHING [CF80K]

Ref	Part Number	Qty	Description
30	03221654	1	PRINTER, Printer RS232.9-40VDC
31	03221655	1	SUPPORT, Holding plate v, F.DRUCKER
32	03221656	1	SUPPORT, Holding plate h, F.DRUCKER
33	03221658	1	MONITOR, CONTROL, Monitor
34	03221659	1	HOUSING, Housing F.TERMINAL
35	03221660	1	SUPPORT, Holding plate F.TERMINAL
36	03221661	1	SUPPORT, Support F.TERMINAL
37	03221662	1	BAR, Holding bar F.TERMINAL
38	03221663	2	ANGLE BAR, Holding angle F.TERMINAL
39	03221664	1	JACK SCREW, Jackscrew M8x20-65
40	03221666	2	HANDLE, Star handle bolt M6x60
41	03221667	1	CLOTHES, Trim l
42	03221668	1	CLOTHES, Trim r
43	03221670	2	CLOTHES, Edge protection element GRE2266 L=700 M.DICH TLIPPE
44	060530306	1	CONTROL, Keypad
45	03221671	1	HARNESS, Nipple cable F.TASTATUR
46	060524445	1	LIGHT, WARNING, Signal generator
47	614-5010	1	SCREW, Hex, M5 x 10, 8.8, Full Thd, Hex bolt M5X10ISO40178.8
48	614-8012	2	SCREW, Hex, M8 x 12, 8.8, Full Thd, Hex bolt M8x12ISO40178.8
49	895-11008	4	WASHER, M8 x 16 x 1.6, Washer 8,4 DIN125 ST
50	614-10020	1	BOLT, Hex, M10 x 20, 8.8, Full Thd,
51	614-8020	1	BOLT, Hex, M8 x 20, 8.8, Hex bolt M8X20ISO40178.8
52	614-8040	1	BOLT, Hex, M8 x 40, 8.8, Full Thd, Hex, M8 x 40, 8.8, Full Thd
53	06116243	1	NUT, Hex nut M8 DIN985 8
55	895-11005	10	WASHER, M5 x 10 x 1, Washer 5,3 DIN125 ST

F210(04) CAB- OPERATING AND DISPLAY UNIT, ATTACHING [CF80P]

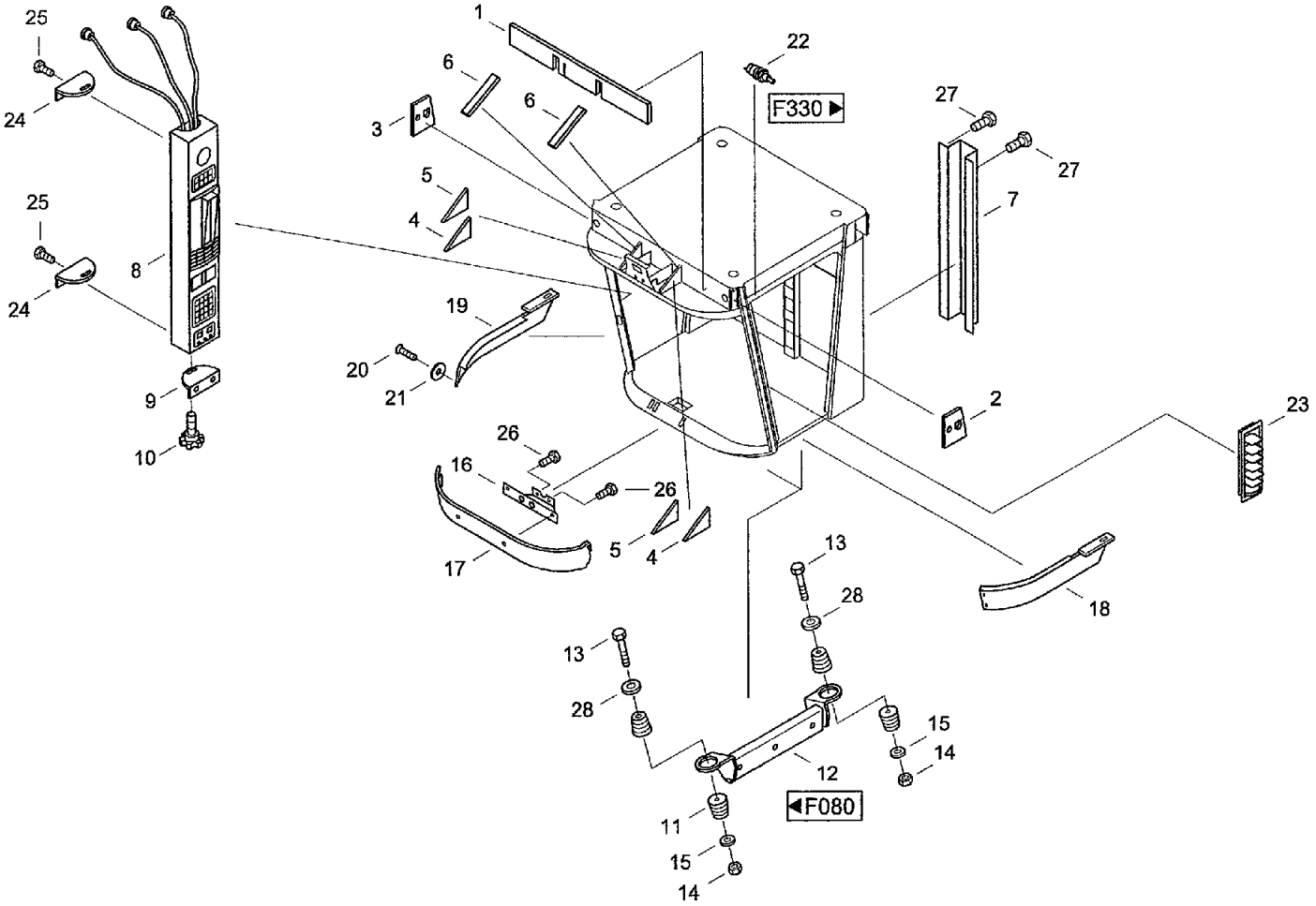

CF80 CASE IH CROSS FLOW COMBINE

F210(04) CAB- OPERATING AND DISPLAY UNIT, ATTACHING [CF80P]

Ref	Part Number	Qty	Description
1	31337615	1	INSULATOR, RUBBER, Insulator
2	31337592	1	INSULATOR, RUBBER, Insulator
3	31337584	1	INSULATOR, RUBBER, Insulator
4	31337576	2	INSULATOR, RUBBER, Insulator
5	31337568	2	INSULATOR, RUBBER, Insulator
6	31337551	2	INSULATOR, RUBBER, Insulator
7	31337816	1	GROMMET, Cable conduit
8	31337262	1	INDICATOR, Operating and display unit MECHAN.BODENKOP.
9	31337824	1	SLIPPER, Connecting link
10	31337213	1	SET SCREW, Star handle bolt M6x15
11	123566A1	8	ISOLATOR, Rubber bearing
12	31337254	2	HOLDER, Cab carrier
13	814-16160	4	BOLT, Hex, M16 x 160, 8.8, Hex bolt M16x160ISO40148.8
14	DF004776	4	NUT, Hex nut M16DIN9858
15	06502806	4	WASHER, Washer R17.5DIN440100HV
16	120143A4	1	SUPPORT, Support
17	120140A2	1	COVER, Cap
18	31337744	1	PLATE, Apron l
19	31337752	1	PLATE, Apron r
20	614-6016	6	BOLT, Hex, M6 x 16, 8.8,
21	895-25005	6	WASHER, M5 x 15 x 1.6, Washer 5,3 DIN9021 140HV
22	31337205	1	SWITCH, Switch
23	31337680	11	DIFFUSER, Diffuser
24	31340104	2	SLIPPER, Rocker
25	03020456	6	SCREW, Hex bolt M5X12-C-ZD1N7500ST

F210(05) CAB- OPERATING AND DISPLAY UNIT, ATTACHING [CF80P]

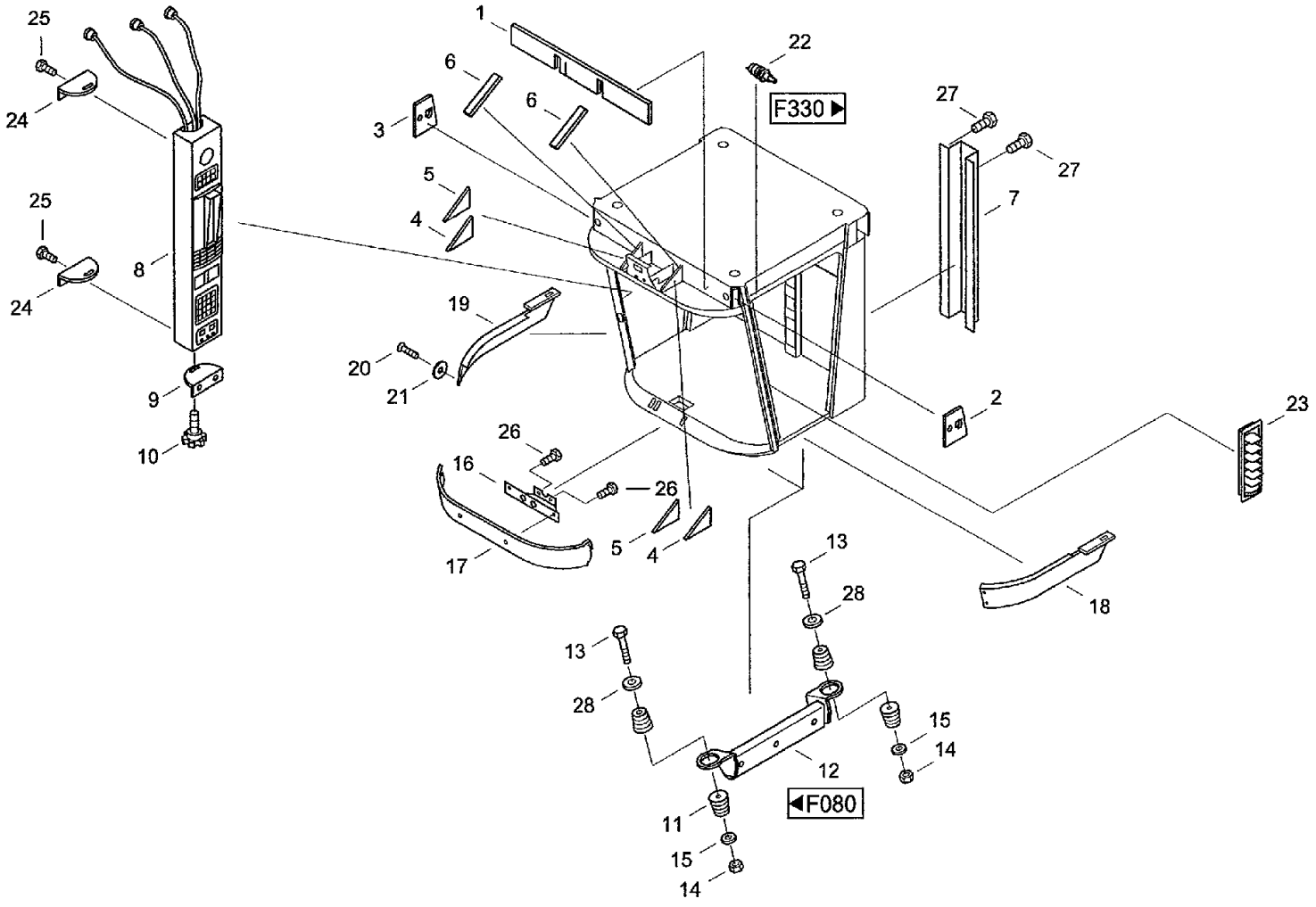

CF80 CASE IH CROSS FLOW COMBINE

F210(05) CAB- OPERATING AND DISPLAY UNIT, ATTACHING [CF80P]

Ref	Part Number	Qty	Description
26	614-8016	2	BOLT, Hex, M8 x 16, 8.8,
27	03020302	22	SCREW, Self-tapping screw ST4,2x13-F-H DIN7981 A3R(SCHW
28	895-11016	4	WASHER, M16 x 30 x 3, Washer 17DIN125ST

F210(06) CAB- OPERATING AND DISPLAY UNIT, ATTACHING [CF80Q]

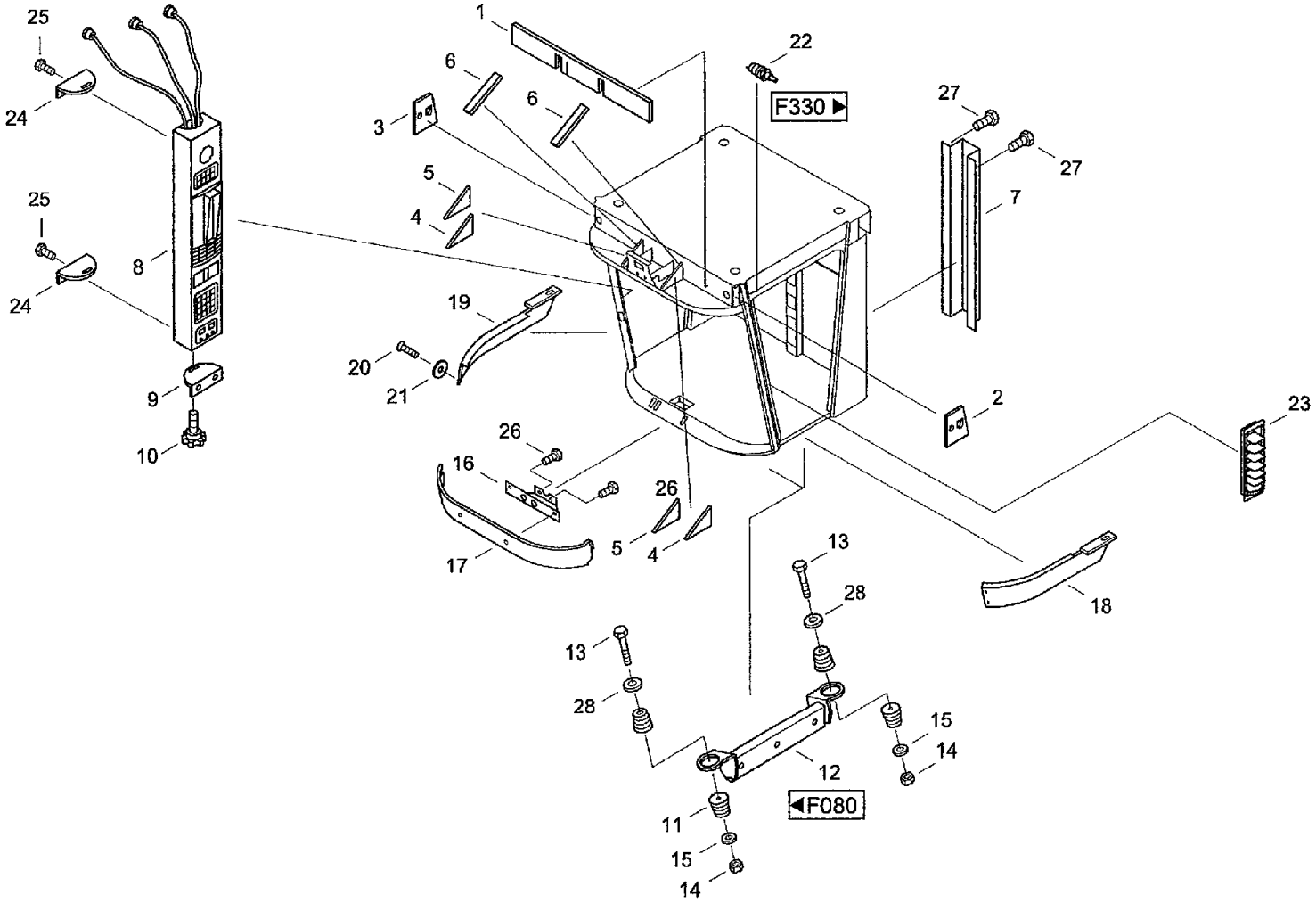

CF80 CASE IH CROSS FLOW COMBINE

F210(06) CAB- OPERATING AND DISPLAY UNIT, ATTACHING [CF80Q]

Ref	Part Number	Qty	Description
1	31337615	1	INSULATOR, RUBBER, Insulator
2	31337592	1	INSULATOR, RUBBER, Insulator
3	31337584	1	INSULATOR, RUBBER, Insulator
4	31337576	2	INSULATOR, RUBBER, Insulator
5	31337568	2	INSULATOR, RUBBER, Insulator
6	31337551	2	INSULATOR, RUBBER, Insulator
7	31337816	1	GROMMET, Cable conduit
8	03221388	1	UNIT, Operating and display unit ELEKTR.HYD.BODENKOP.
9	31337824	1	SLIPPER, Connecting link
10	31337213	1	SET SCREW, Star handle bolt M6x15
11	123566A1	8	ISOLATOR, Rubber bearing
12	31337254	2	HOLDER, Cab carrier
13	814-16160	4	BOLT, Hex, M16 x 160, 8.8, Hex bolt M16x160 ISO4014 8.8
14	DF004776	4	NUT, Hex nut M16DIN9858
15	06502806	4	WASHER, Washer R17.5 DIN440 100HV
16	120143A4	1	SUPPORT, Support
17	120140A2	1	COVER, Cap
18	31337744	1	PLATE, Apron l
19	31337752	1	PLATE, Apron r
20	614-6016	6	BOLT, Hex, M6 x 16, 8.8,
21	895-25005	6	WASHER, M5 x 15 x 1.6, Washer 5,3 DIN9021 140HV
22	31337205	1	SWITCH, Switch
23	31337680	11	DIFFUSER, Diffuser
24	31340104	2	SLIPPER, Rocker
25	03020456	6	SCREW, Hex bolt M5x12-C-ZDIN7500ST

F210(07) CAB- OPERATING AND DISPLAY UNIT, ATTACHING [CF80Q]

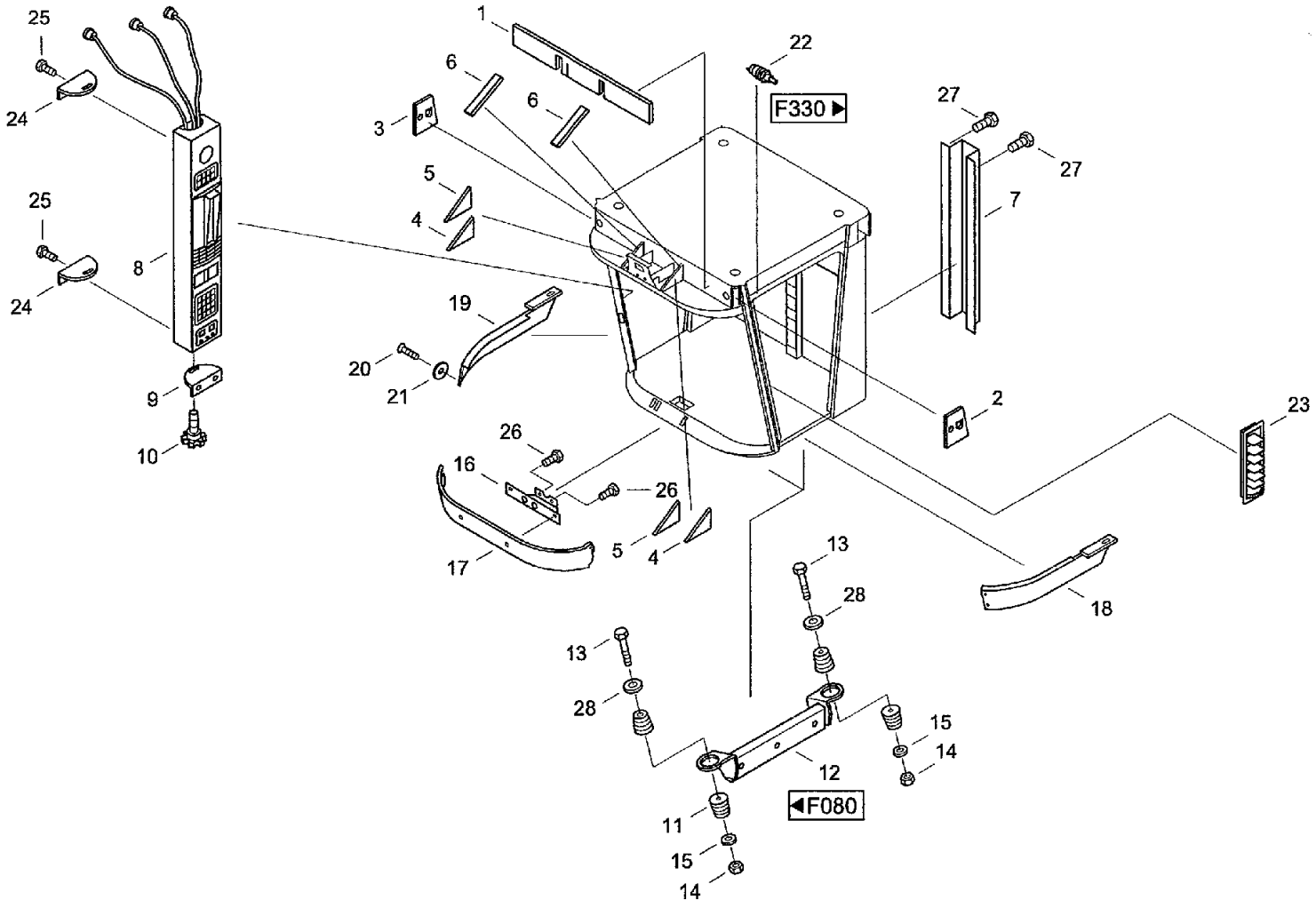

CF80 CASE IH CROSS FLOW COMBINE

F210(07) CAB- OPERATING AND DISPLAY UNIT, ATTACHING [CF80Q]

Ref	Part Number	Qty	Description
26	614-8016	2	BOLT, Hex, M8 x 16, 8.8,
27	03020302	22	SCREW, Self-tapping screw ST4,2x13-F-H DIN7981 A3R(SCHW
28	895-11016	4	WASHER, M16 x 30 x 3, Washer 17DIN125ST

F220(01) CAB- RADIO, RADIOTELEPHONE [CF80K]

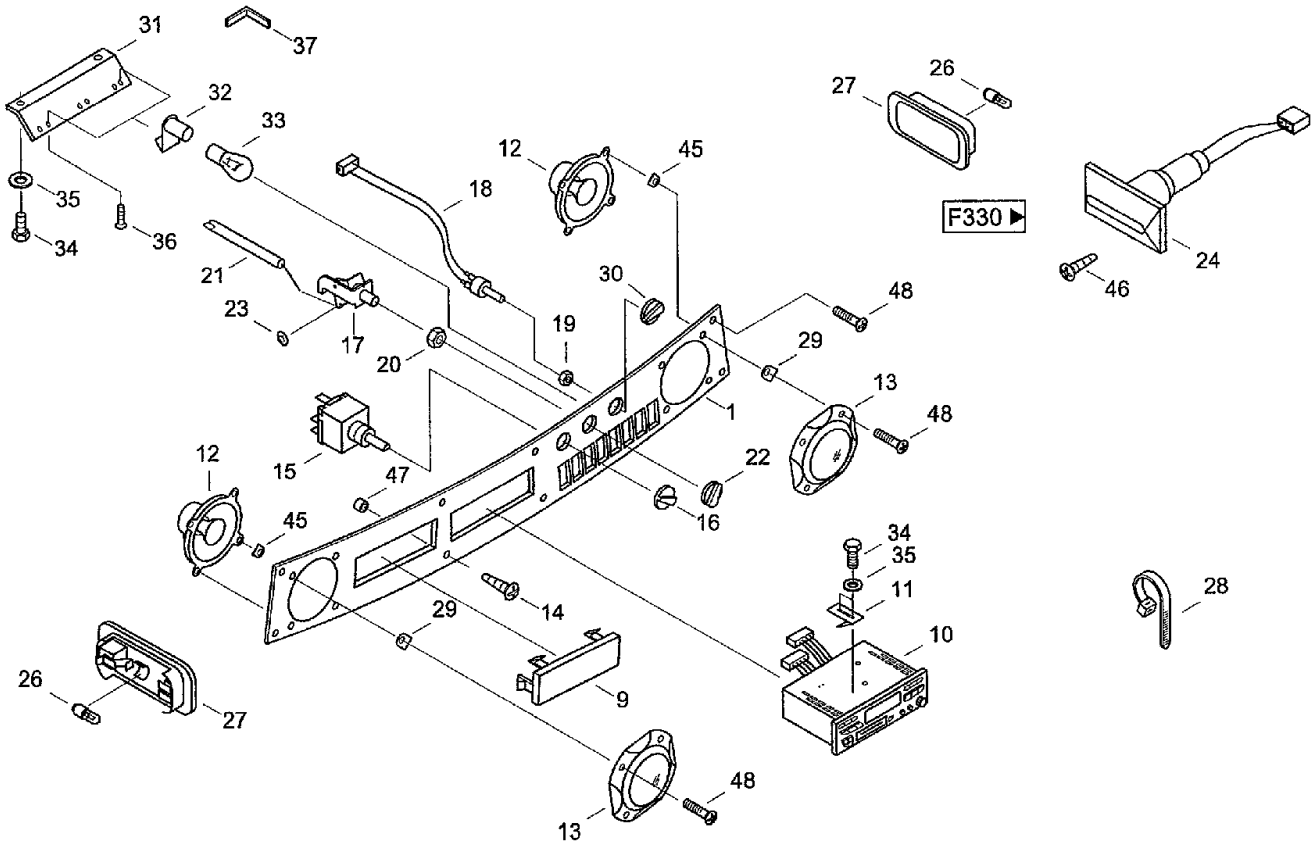

CF80 CASE IH CROSS FLOW COMBINE

F220(01) CAB- RADIO, RADIOTELEPHONE [CF80K]

Ref	Part Number	Qty	Description
1	31337857N1	1	SHEET, Plate
2	31338761	2	PEDESTAL, Frame ENDSTOCK
3	31338778	6	PEDESTAL, Frame MITTELSTUCK
4	03221723	1	CONNECTION, ELECTRIC, Switch
5	31338681	1	SWITCH, Switch
6	31337945	1	SWITCH, Switch
7	31337953	1	SWITCH, Switch
8	31338673	1	SWITCH, Switch
9	31338938	1	COVER, Blind cover
10	31338913	1	RADIO, Radio RC319RDS
11	31337840	1	HOLDER, Support
12	31338921	2	SPEAKER, Loudspeaker IC107
13	31338946	2	SPEAKER, Cover F.LAUTSPRECHER
14	060519368	4	SCREW, Self-tapping screw ST DIN7981 4.2X32-F-H
15	31337920	1	SWITCH, Switch
16	31337367	1	BUTTON, Button
17	31337078	1	SWITCH, Control lever
18	31337086	1	HARNESS, Potentiometer M.KABELSATZ
19	829-4410	1	NUT, Thin, M10 x 1.5, Cl 05, Hex nut M10 IS04035 05
20	03794914	1	Hex nut 7/16ZOLL-14NC
21	31338962	1	BOWDEN CONTROL, Bowden cable
22	31337342	1	BUTTON, Control knob
23	31337898	1	FASTENER, Quick fastener
24	31337270	1	HARNESS, Lighting F.KONSOLE
26	07002555	2	BULB, Filament lamp R5W-12V DIN72601

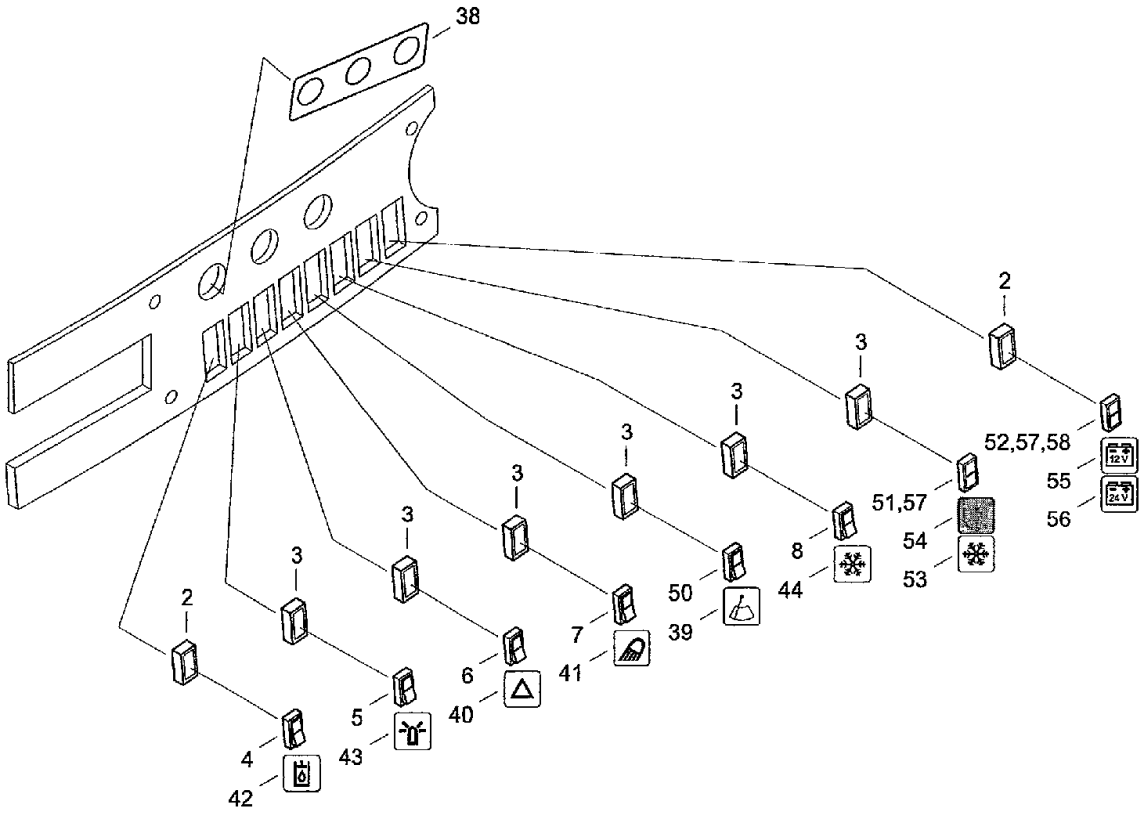
38
2
3
3
3
3
3
3
3
3
2
2
52,57,58
55
56
51,57
54
53
8
44
50
39
7
41
6
40
5
43
4
42

CF80 CASE IH CROSS FLOW COMBINE

F220(02) CAB- RADIO, RADIOTELEPHONE [CF80K]

Ref	Part Number	Qty	Description
27	31338905	2	LIGHT, Lamp INNENRAUM
28	31338800	3	CLAMP, Cable band
29	31337904	8	NUT, Nut
30	31337350	1	BUTTON, Control knob
31	31337785	1	HOLDER, Support
32	31338698	2	PLATE, Head
33	07088011	1	LIGHT, Filament lamp 24V-1.2W/8GP13516
34	614-5010	4	SCREW, Hex, M5 x 10, 8.8, Full Thd, Hex bolt M5x10ISO40178.8
35	06502525	4	WASHER, Washer R5,5DIN440100HV
36	03020407	4	SCREW, Fillister head screw M4x8-H DIN7985 4.8
37	03221323	2	STRIP, PROTECTION, Protective strip
38	31337697	1	TAG, Label Bedienfolie
39	31355682	1	SYMBOLS, Insert
40	31338005	1	SYMBOLS, Insert WARNBLINKANLAGE
41	31337978	1	SYMBOLS, Insert LIGHT
42	31337994	1	SYMBOLS, Insert HYDRAULIKOL
43	31337986	1	SYMBOLS, Insert gn, RUNDUMLEUCHTE
44	31338021	1	SYMBOLS, Insert KLIMAANLAGE
45	31337912	8	NUT, Nut
46	759-14395	2	SCREW, SELF TAPPING, Pan Hd, M4.2 x 9.5, Self-tapping screw ST4,2x9,5-C ISO7049
47	31339617	2	BUSHING, Sleeve
48	760-14316	12	SCREW, SELF TAPPING, Pan Hd, M4.2 x 16, Self-tapping screw ST4,2x16-C-H ISO7049
50	04120737	1	SWITCH, Rocker switch
51	03221381	1	LIGHT, Indicator light 12V2-FACH
52	03221674	1	LIGHT, Indicator light 12V/24V

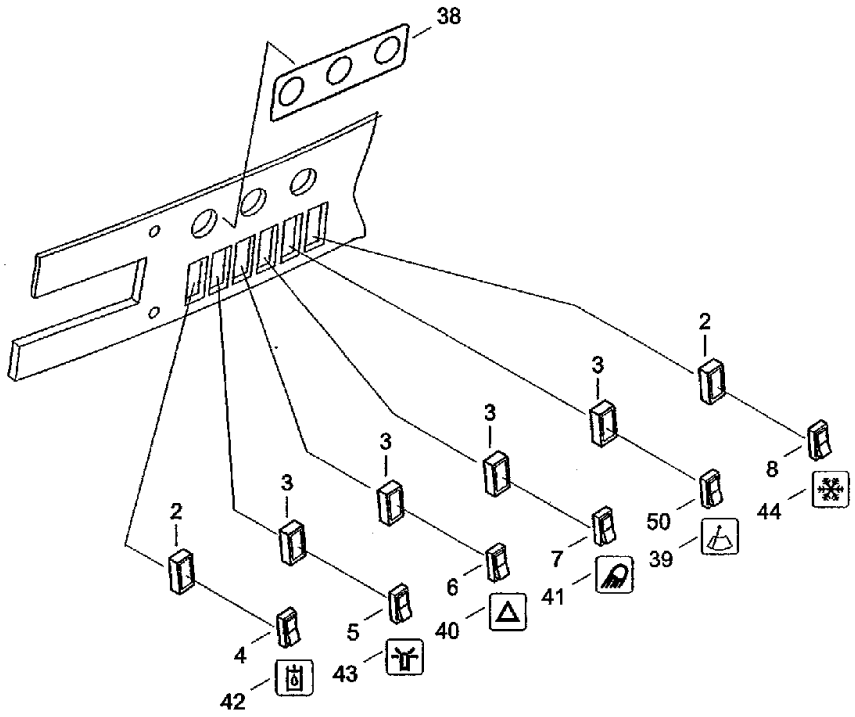
38
2
3
3
3
3
2
3
8
44
50
39
7
41
6
40
5
43
4
42

CF80 CASE IH CROSS FLOW COMBINE

F220(03) CAB- RADIO, RADIOTELEPHONE [CF80K]

Ref	Part Number	Qty	Description
53	03221675	1	INSERT, Insert rt, KLIMAANLAGE
54	07069388	1	INSERT, Insert sw
55	03221676	1	INSERT, Insert BATTERIE 12V
56	03221677	1	INSERT, Insert BATTERIE 24V
57	07070453	2	SOCKET, Socket 12VM.FASSUNG
58	07069363	1	SOCKET, Socket 24V M.FASSUNG

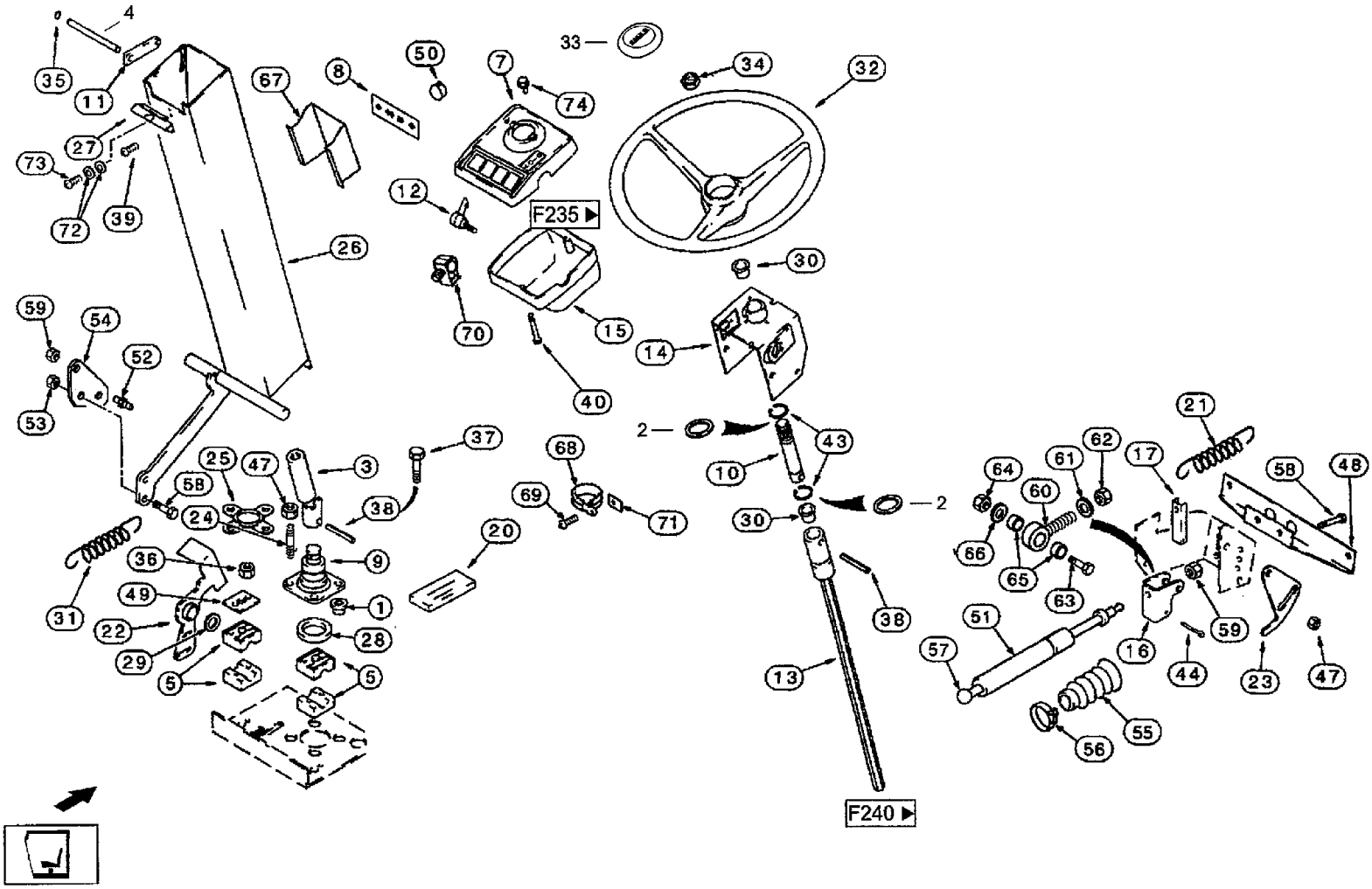
F235
F240
2
4
1
3
5
7
8
9
10
11
12
13
14
15
16
17
20
21
22
23
24
25
26
27
28
29
30
31
32
33
34
35
36
37
38
39
40
43
44
47
48
49
50
51
52
53
54
55
56
57
58
59
60
61
62
63
64
65
66
67
68
69
70
71
72
73
74

CF80 CASE IH CROSS FLOW COMBINE

F230(01) CAB- STEERING COLUMN

Ref	Part Number	Qty	Description
1	104809C1	4	BUSHING, Sleeve
2	495-81051	2	WASHER, 29/32" x 1 1/4" x .060", Washer 0.906ZOLL X1.250ZOLL x 0.060 '
3	119760A1	1	JOINT, UNIVERSAL, Coupling joint
4	119830A1	2	ROD, Rod
5	120326A2	4	BEARING, Block
7	120329A4	1	COVER, Cap
8	120332A1	1	DECAL, Decal
9	120338A2	1	STEERING COLUMN, Flanged bearing F.LENKSAULE
10	124054A3	1	SHAFT, Shaft F.LENKRAD
11	127040A2	1	PLATE, FIXING, Plate
12	129255A1	1	HANDLE, Handle
13	130952A2	1	JOINT, UNIVERSAL, Joint
14	130953A3	1	SUPPORT, Support
15	130956A4	1	CONSOLE, Cap
16	224761A1	1	CLEVIS, Fork
17	130958A1	1	GUIDE, Spout
20	130961A1	1	SEAL, Seal
21	130962A2	1	SPRING, Tension spring
22	136798A1	1	PEDAL, Pedal
23	136800A1	1	SUPPORT, Support
24	136802A1	1	STUD, Pin screw
25	136805A1	1	RETAINER, Support
26	192374A4	1	TUBE, Steering column
27	136919A1	1	COVER, Mounting plate
28	148481C1	1	SEAL, Seal

F230(02) CAB- STEERING COLUMN

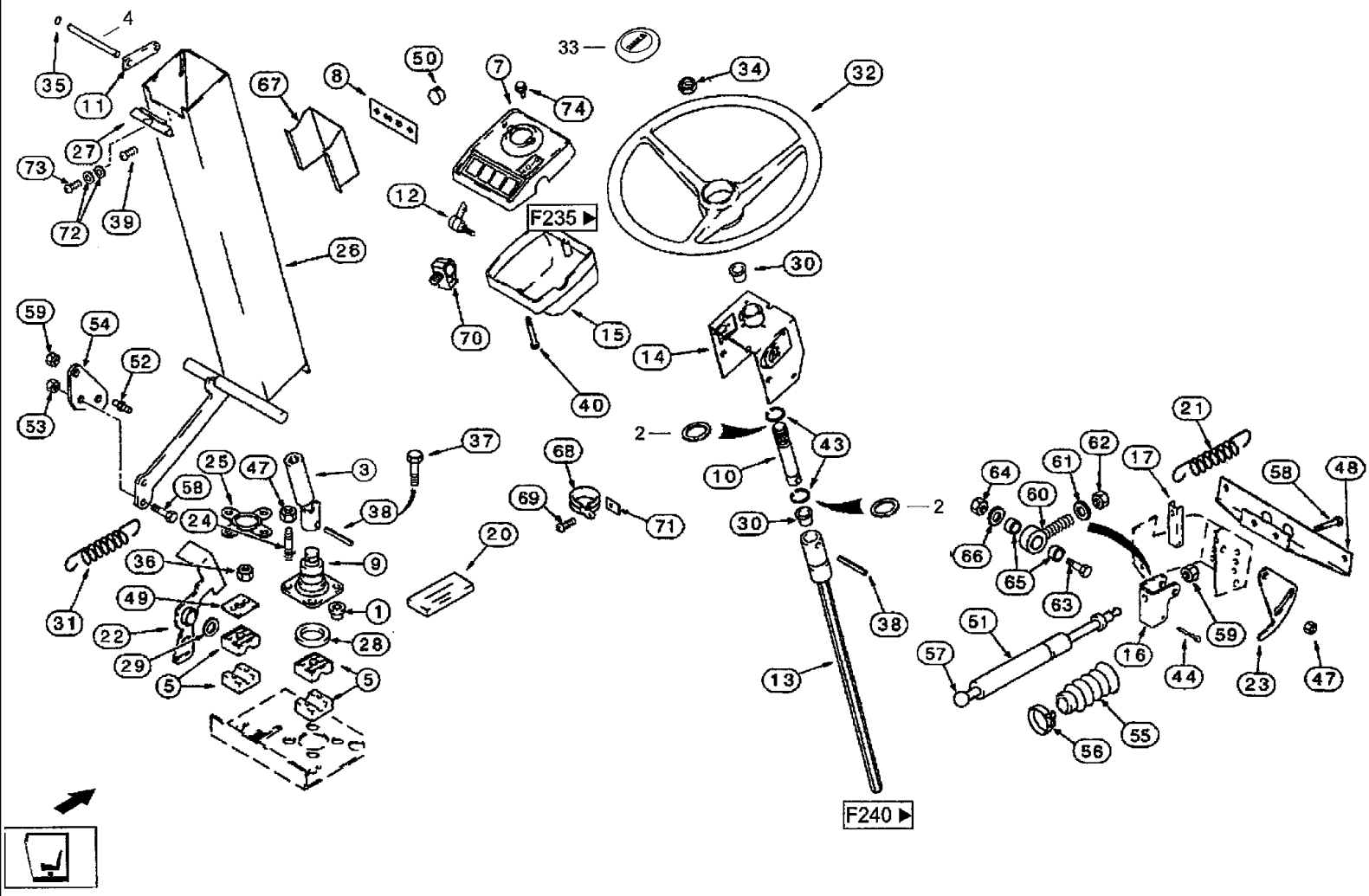

CF80 CASE IH CROSS FLOW COMBINE

F230(02) CAB- STEERING COLUMN

Ref	Part Number	Qty	Description
29	72323	1	BUSHING, Sleeve
30	373445R1	2	BUSHING, Sleeve
31	182652A1	1	SPRING, Tension spring
32	251342A1	1	WHEEL (STEERING), Steering wheel
33	03267251	1	CAP, Cap
34	F19646	1	NUT, Nut F. LENKRAD
35	100-3337	2	RING, LOCKING, #37, .300" Dia, E-Type, #37, .300" Dia, E-Type
36	832-10408	4	NUT, M8 x 1.25, Cl 8, Hex nut M8DIN9828
37	614-10035	3	SCREW, Hex, M10 x 35, 8.8, Full Thd,
38	38-32420	2	PIN, 3/8" x 1 1/4", Coiled, Pin, 3/8" x 1 1/4", Coiled
39	260-14512	2	SCREW, SELF TAPPING, Cross Pan Hd, #10 x 3/4", Self-tapping screw 10-16x0.750ZOLL
40	540-714	2	SCREW, Cross Pan Hd, M3 x 45, Lens-head screw M3x45 DIN85 4.8
43	100-1187	2	RING, SNAP, #87, Ext, 0.810ZOLL x 0.042ZOLL
44	432-828	2	PIN, SPLIT (COTTER), 1/8" x 1 3/4", 1/8" x 1 3/4"
47	825-51410	3	NUT, M10, Flg Ser, Hex nut M10
48	120143A4	1	SUPPORT, Support
49	185268A1	2	PLATE, Plate
50	353-411	1	PLUG, Dome, 1.000" hole, Nylon, Plug 1ZOLLX0.453ZOLL
51	224357A1	1	CYLINDER ASSY., Gas strut
52	142597A1	1	STUD, Ball pivot
53	829-1410	1	NUT, M10, Cl 10, Hex nut M10ISO403210
54	223917A1	1	PLATE, Plate
55	195089A1	1	BOOT, Bellows
56	214-1516	1	CLAMP, #16, .81/1.50 Type F Worm, W/liner, Hose clip AS0.021ZOLL -0.031ZOLL -W2 -1
57	3233348R1	1	CLIP, Clip

F230(03) CAB- STEERING COLUMN

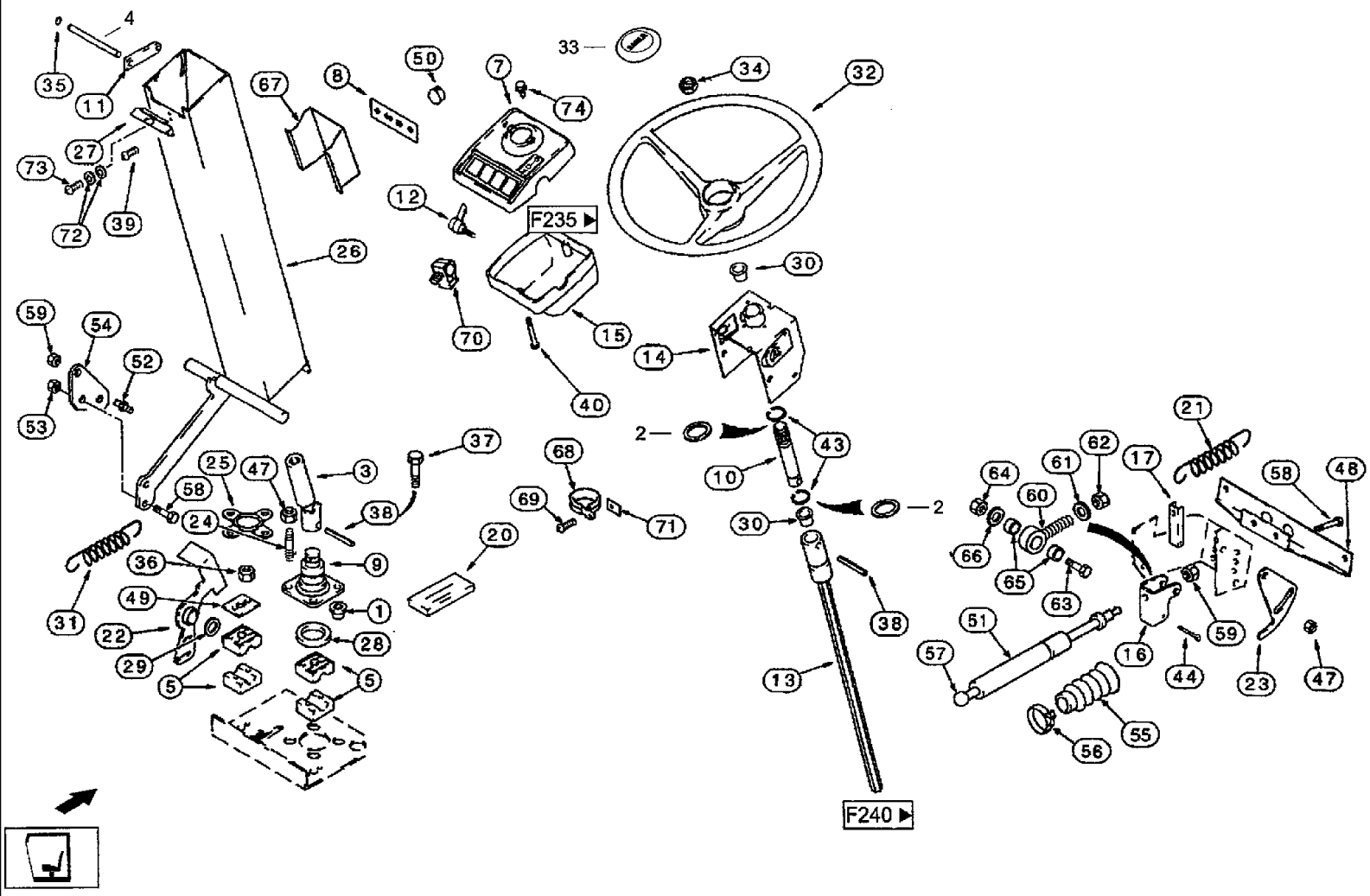

CF80 CASE IH CROSS FLOW COMBINE

F230(03) CAB- STEERING COLUMN

Ref	Part Number	Qty	Description
58	614-8020	4	BOLT, Hex, M8 x 20, 8.8, Hex bolt M8X20 ISO4017 8.8
59	825-5148	4	NUT, M8, Flg Ser,
60	224235A1	1	BALL JOINT, Ball joint
61	496-21034	1	WASHER, 11/32" x 11/16" x 0.89", HDN, Washer 0.344ZOLL X1ZOLL X0.098ZOLL
62	425-115	1	NUT, 5/16"-24, G5, Hex nut 5/12ZOLL-24
63	413-528	1	BOLT, Hex, 5/16"-18 x 1 3/4", G5, Hex bolt 5/16ZOLL.X1.750ZOLL
64	425-105	1	NUT, 5/16"-18, G5, Hex nut 5/16ZOLL-18
65	224089A1	2	SPACER, Spacer 0=14,3x3 L=5,3
66	492-11031	2	WASHER, LOCK, 5/16", ZOLL
67	231985A1	1	GUARD, Shield
68	515-23254	1	CLAMP, 1", Insul, 3/8" Bolt, Pipe clip D=25,4
69	1276119C1	1	SCREW, Screw
70	233185A1	1	CLIP, ELECTRICAL, Clip
71	233186A1	1	CLIP, ELECTRICAL, Nut
72	492-11010	2	WASHER, LOCK, #10,
73	1267247C1	1	SCREW, Screw
74	191216A1	2	SCREW, Screw

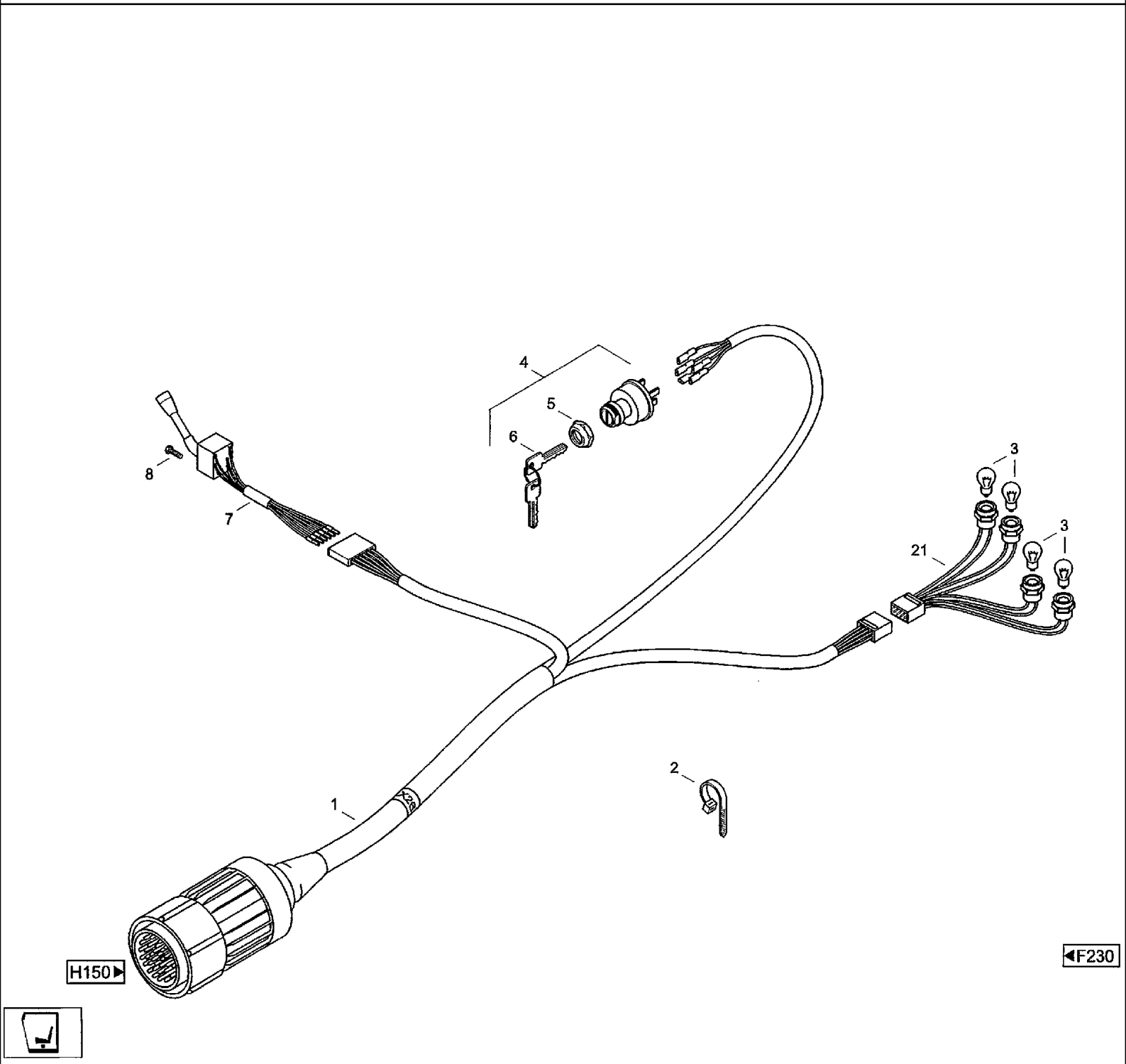
4
5
6
8
7
3
3
21
2
1
H150
F230

CF80 CASE IH CROSS FLOW COMBINE

F235 CAB- STEERING COLUMN, ELECTRICAL EQUIPMENT

Ref	Part Number	Qty	Description
1	03221395	1	HARNESS, Whring loom LENKSAULE
2	060152467	3	CABLE, Cable band PLT-2S-M30 871 1305 4.8X188 MM
3	D71346	4	LAMP, TAIL, Filament lamp NR.168
4	282775A1	1	SWITCH, IGNITION, Ignition lock
5	A77314	1	NUT, Special nut
6	1964831C2	1	SET OF 2 KEYS, Key SATZ F.KABINE
7	1500137C2	1	SWITCH, FLASHER, Switch
8	614-4008	2	BOLT, Hex, M4 x 8, 8.8, Full Thd, Hex bolt M4x8ISO40178.8
21	03221581	1	HARNESS, Whring loom KABELSATZ

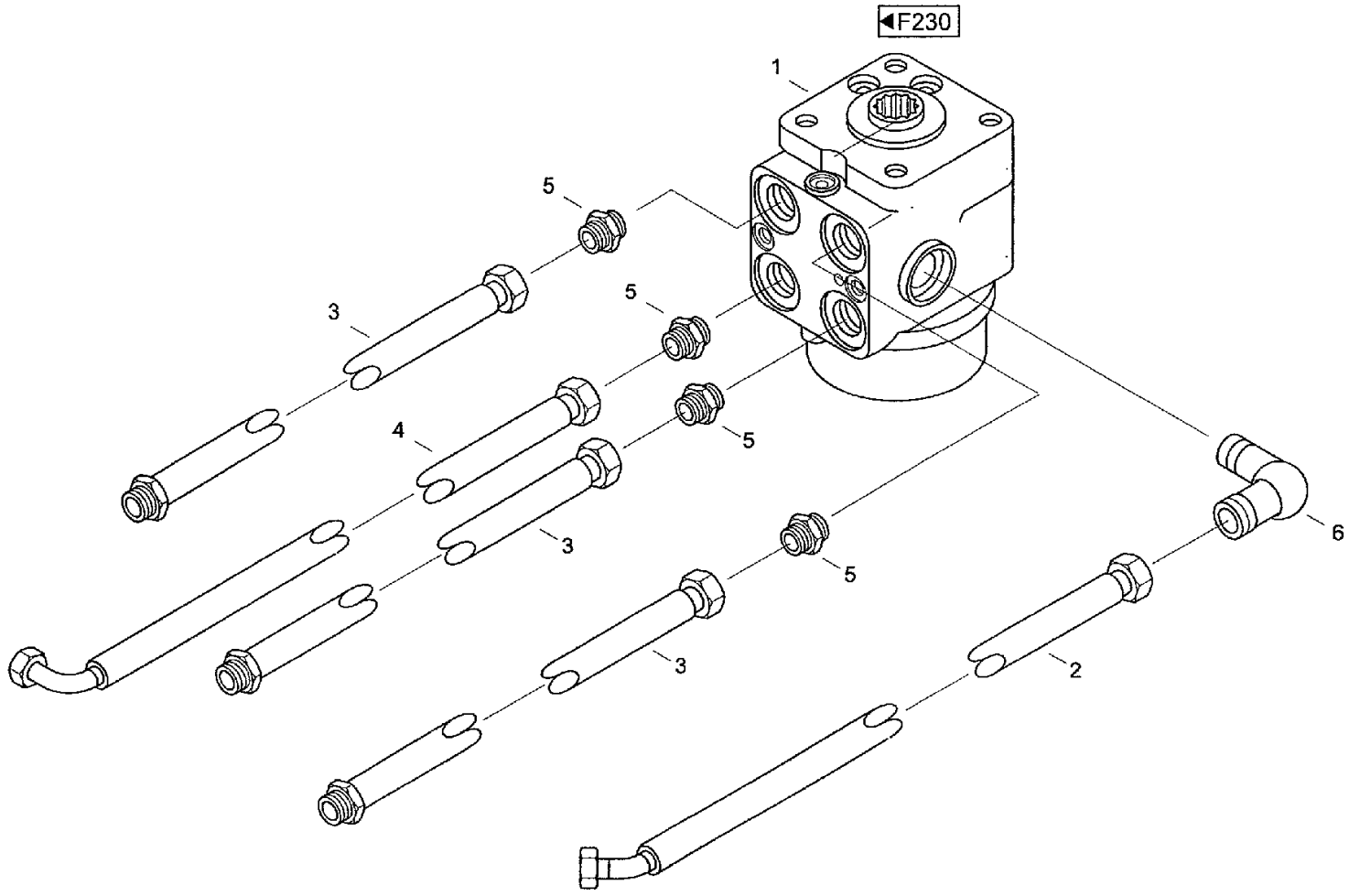
F230
1
5
3
5
4
5
3
5
3
2
6

CF80 CASE IH CROSS FLOW COMBINE

F240 CAB- STEERING UNIT

Ref	Part Number	Qty	Description
1	31338954	1	BOX, STEERING, Steering unit
2	06549537	1	HOSE, Hose line PHD206x2400AOLAOL45
3	06549545	3	HOSE, Hose line PHD213x2650HLAOL
4	06549553	1	HOSE, Hose line PHD21 3X2250AOLAOL90
5	31337221	4	RESTRICTOR, Male connector
6	31337238	1	FITTING, Pivotong joint

F250(01) CAB- DOOR, LEFT

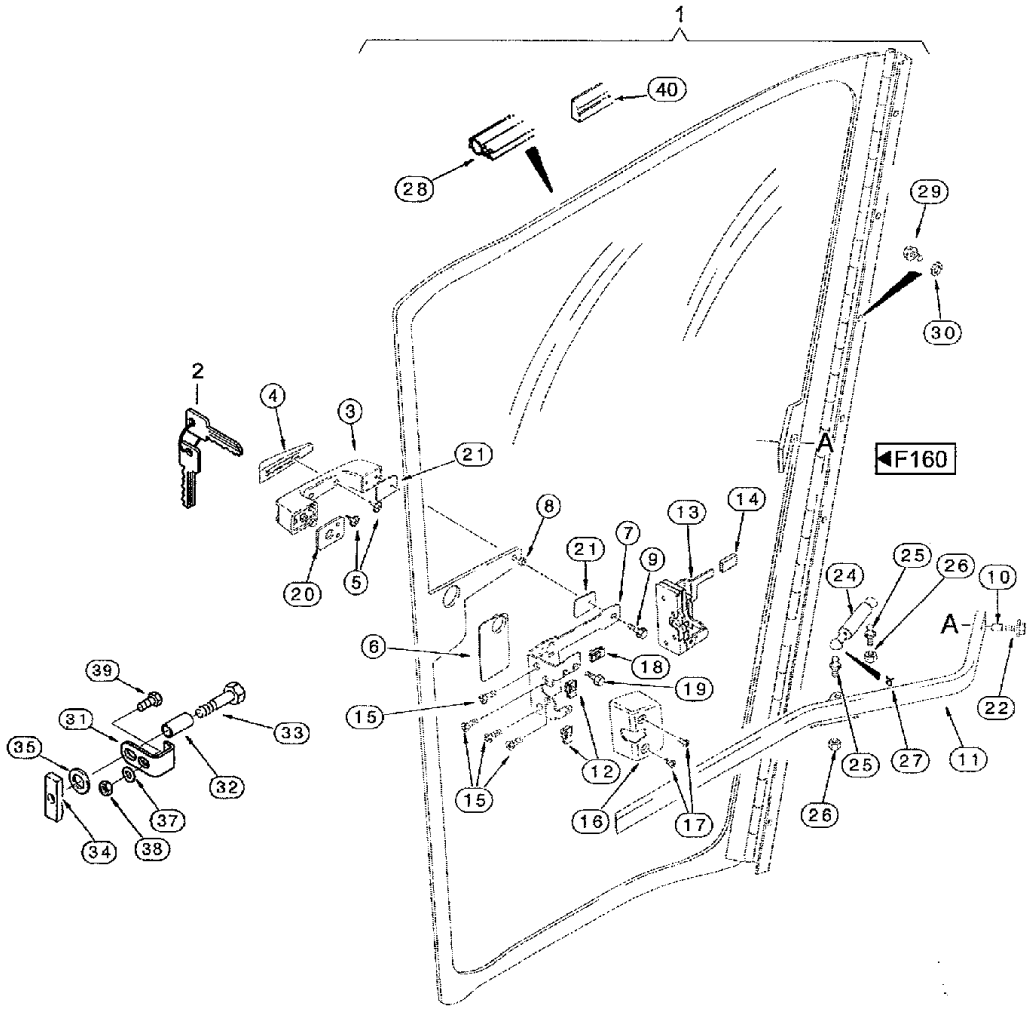

CF80 CASE IH CROSS FLOW COMBINE

F250(01) CAB- DOOR, LEFT

Ref	Part Number	Qty	Description
1	259688A2	1	DOOR, Door k
2	1964831C2	1	SET OF 2 KEYS, Key SATZ F.KABINE
3	117711A1	1	HANDLE, Handle
4	176022A2	1	DAMPER, HITCH, Bumper
5	177092A1	2	SCREW, Self-tapping screw
6	123946A2	1	GASKET, Rubber seal
7	123937A2	1	SUPPORT, Support
8	109171C1	1	BUSHING, Sleeve
9	303888A1	3	SCREW, Flange bolt
10	175578C1	1	INSULATOR, Insert
11	195649A1	1	HANDLE, Handle
12	564791R1	2	NUT, Nut
13	117714A1	1	LATCH, Latch
14	60-6423T1	1	CAP, Cap
15	443-12512	4	SCREW, Cross Flat Hd, 1/4"-20 x 3/4", Countersunk screw 1/4ZOLL -20X3/4ZOLL C-003 CST
16	127498A1	1	COVER, Cover
17	140-111	2	SCREW, Cross Pan Hd, 1/4"-20 x 1/2", Lens-head screw 1/4ZOLL -20x1/2ZOLL C-014 CST
18	131-610	1	NUT, U, Ret, 1/4"-20, Nut D
19	463-3258	1	SCREW, Hex Wash Hd, 1/4"-20 x 1/2", Hex bolt 1/4ZOLL-20X1/2ZOLL
20	194174A1	1	GASKET, Rubber seal
21	194175A1	2	GASKET, Rubber seal
22	458-416	1	BOLT, Hex Flg, 1/4"-20 x 1", G5, Full Thd, Hex bolt 1/4ZOLL-20x1ZOLL
24	31337711	1	SHOCK ABSORBER, Damper assy
25	31337166	2	BALL JOINT, Ball pivot
26	231-1445	2	NUT, LOCK, 5/16"-18, GB, Lock nut 5/16ZOLL-18

F250(02) CAB- DOOR, LEFT

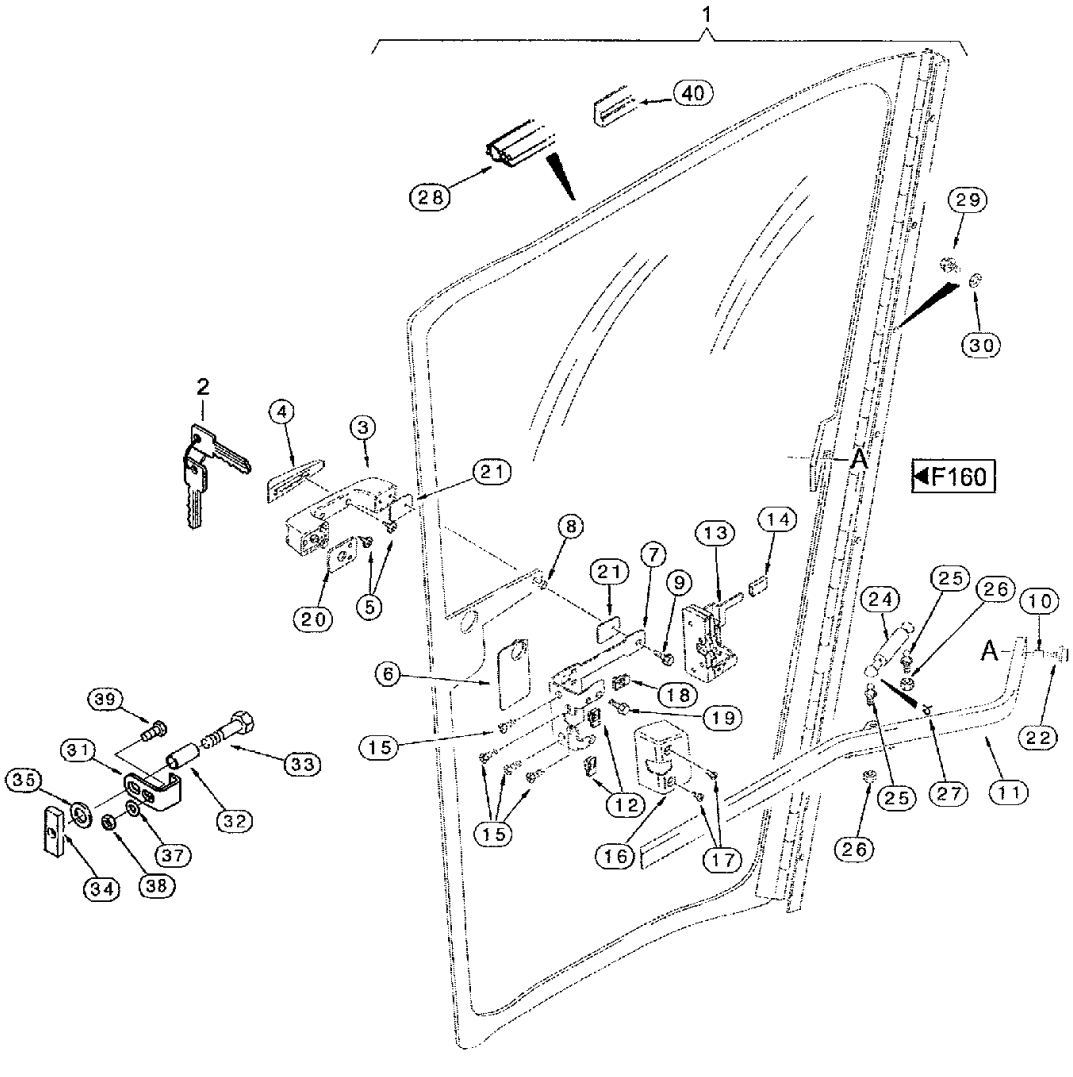

CF80 CASE IH CROSS FLOW COMBINE

F250(02) CAB- DOOR, LEFT

Ref	Part Number	Qty	Description
27	31337703	2	BOW, Securing bow
28	234089A1	1	DOOR SEAL, Seal
29	97007317	8	SCREW, Cheese-head screw M5x16DIN69128.8
30	03020415	8	WASHER, Washer A5,3 DIN125 ST
31	31337865	1	SHEET, Sheet
32	31337777	1	SLEEVE, Sleeve
33	614-12045	1	BOLT, Hex, M12 x 45, 8.8, Hex bolt M12x45ISO40178.8
34	31338890	1	HOLDER, Holder-up
37	895-11008	2	WASHER, M8 x 16 x 1.6, Washer 8.4DIN125ST
38	POS01001	1	SAFETY NUT, Hex nut M8 DIN985 8
39	614-8016	1	BOLT, Hex, M8 x 16, 8.8,
40	232801A1	1	GASKET, Seal

F260 CAB- DOOR, RIGHT

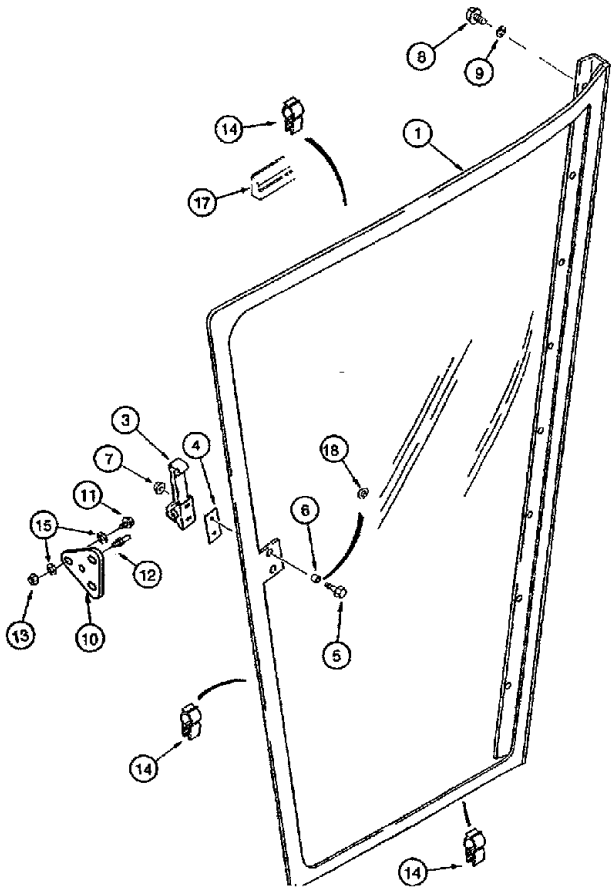

◀F160

CF80 CASE IH CROSS FLOW COMBINE

F260 CAB- DOOR, RIGHT

Ref	Part Number	Qty	Description
1	186390A2	1	DOOR, Door
3	1955184C1	1	LEVER ASSY., Lever
4	194190A2	1	GASKET, Cushion
5	97006C1	2	BOLT, Flange bolt
6	109171C1	2	BUSHING, Sleeve
7	97005C1	2	NUT, Lock nut
8	97007317	8	SCREW, Cheese-head screw M5x16 DIN6912 8.8
9	03020415	8	WASHER, Washer A5.3 DIN125 ST
10	31337158	1	PLATE, Setting plate
11	614-8020	3	BOLT, Hex, M8 x 20, 8.8, Hex bolt M8X20ISO40178.8
12	31338970	1	THREADED ROD, Threaded bolt
13	POS01001	3	SAFETY NUT, Hex nut M8 DIN985 8
14	234089A1	1	DOOR SEAL, Seal
15	895-11008	6	WASHER, M8 x 16 x 1.6, Washer 8.4D1N125ST
17	232801A1	1	GASKET, Seal
18	225913A1	2	WASHER, Washer

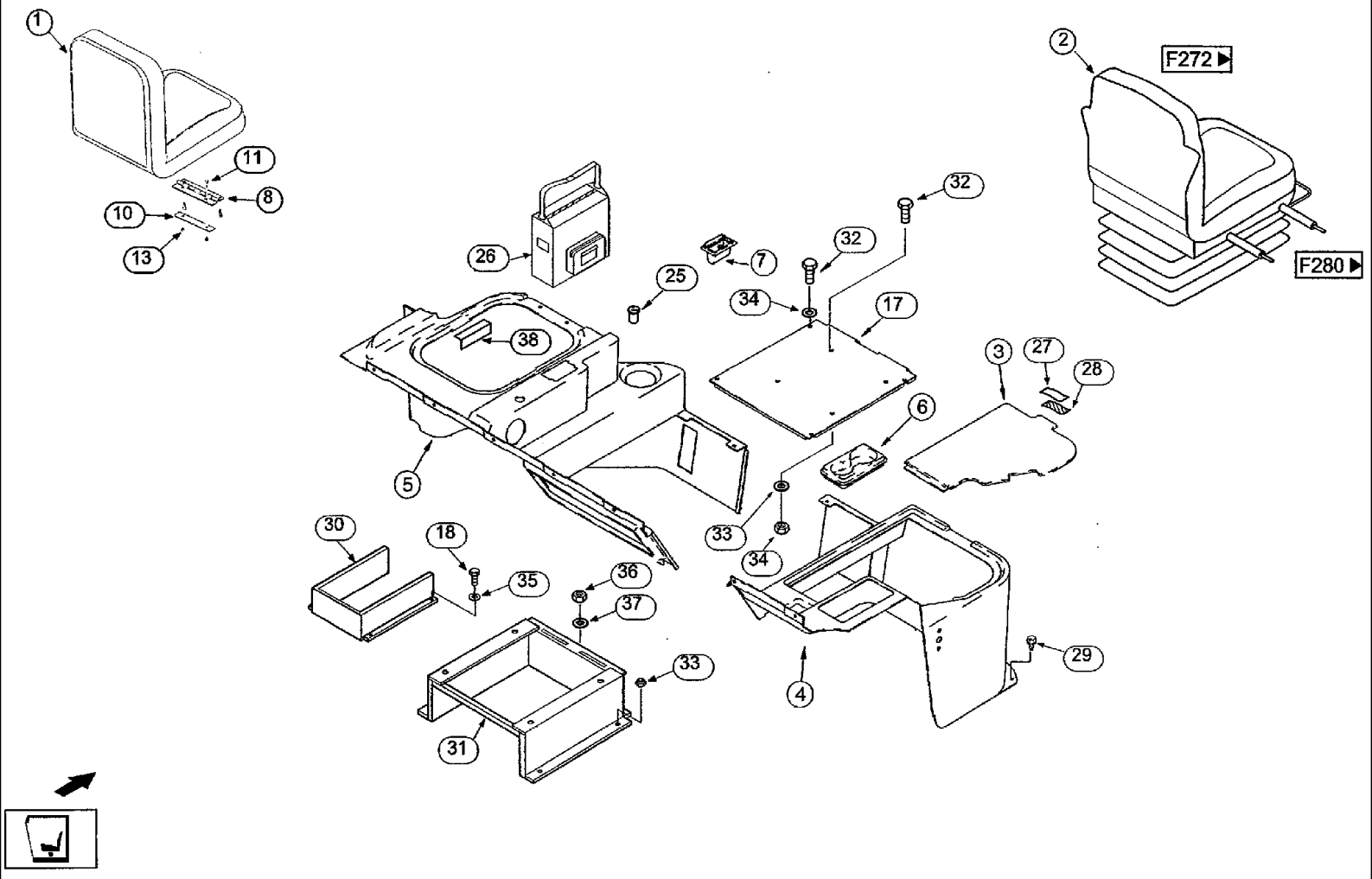
1
11
8
10
13
2
F272
F280
26
25
7
32
32
34
17
38
5
3
27
28
6
30
18
35
36
37
33
34
33
4
29
31

CF80 CASE IH CROSS FLOW COMBINE

F270(01) CAB- SEAT

Ref	Part Number	Qty	Description
1	31338054	1	SEAT, Seat, buddy
2	31338046	1	SEAT, Driver's set M.ADAPTERPLATTE
3	140320A1	1	COVER, Cover
4	140322A2	1	COVER, Cover
5	140321A3	1	COVER, Cover
6	1344244C	1	Tray
7	124234A1	1	TRAY, Ashtray
8	31338183	1	HINGE, Hinge F.BEIFAHRERSITZ
10	31338167	1	PLATE, Backing plate
11	614-8020	4	BOLT, Hex, M8 x 20, 8.8, Hex bolt M8x20 ISO4017 8.8
13	825-1408	2	NUT, M8, Cl 8,
17	31338191	1	COVER ASSY, Cap KOMPLETT
18	614-6016	4	BOLT, Hex, M6 x 16, 8.8,
25	31338038	1	LIGHTER, CIGARETTE, Cigarette lighter 12V
26	31338134	1	COOLER ASSY., Refrigerating box 12V
27	31338070	1	ADHESIVE STRIP, Velcro strap OSEN
28	31338087	1	ADHESIVE STRIP, Velcro strap HAKEN
29	03020456	20	SCREW, Hex bolt M5x12-C-Z DIN7500 ST
30	31338206	1	SUPPORT, Ice box holder
31	31338230	1	FRAME, Frame
32	614-10025	8	BOLT, Hex, M10 x 25, 8.8, Full Thd, Hex bolt M10x25ISO40178.8
33	97012032	4	NUT, Hex nut M10 DIN985 8
35	895-11006	4	WASHER, M6, Washer 6,4 DIN125 ST
36	POS01001	5	SAFETY NUT, Hex nut M8 DIN985 8
34	895-11010	12	WASHER, M10 x 20 x 2, Washer 10.5DIN125ST

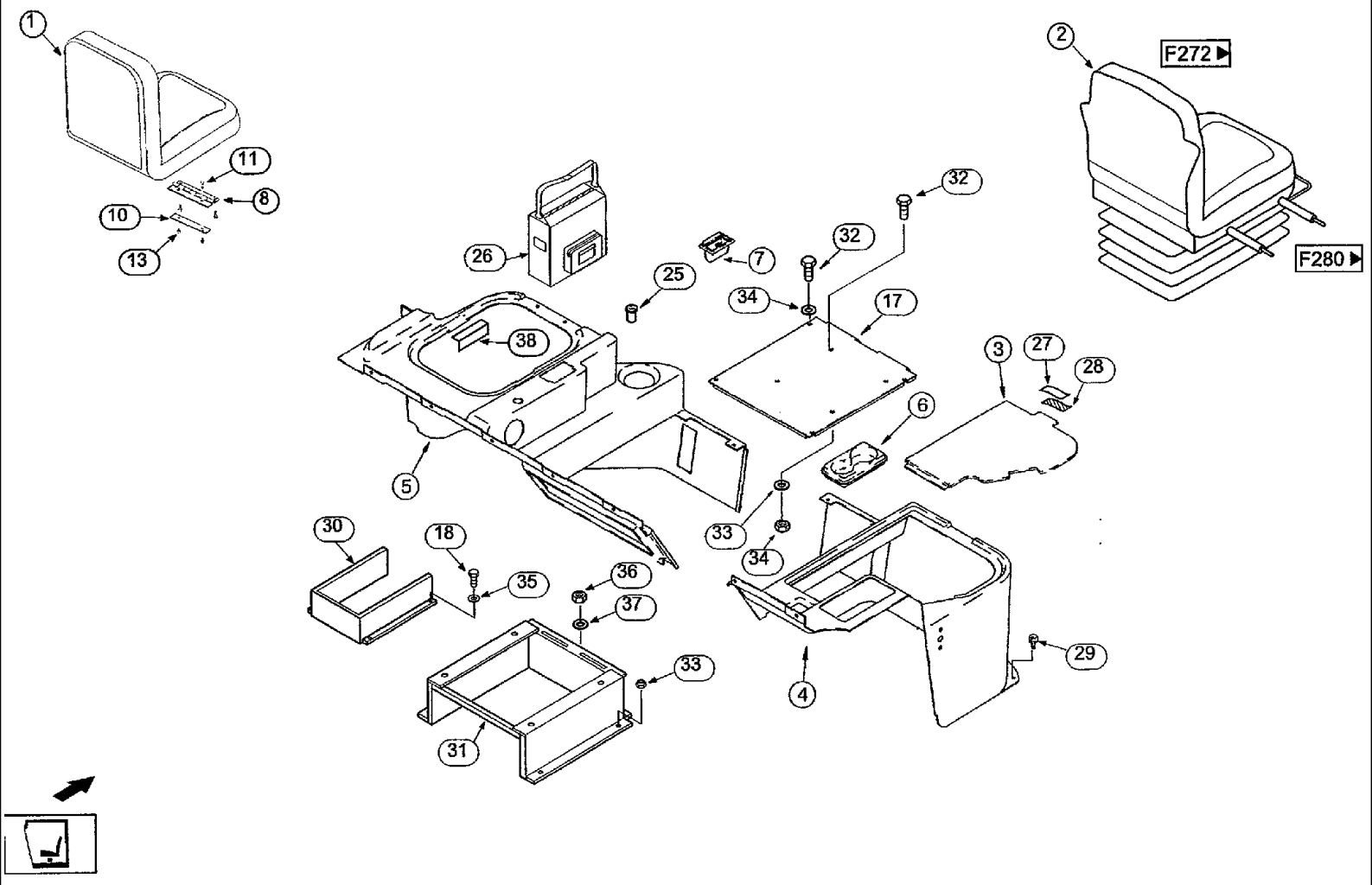
1
11
8
10
13
2
F272
F280
26
25
7
32
32
34
17
38
5
3
27
28
6
33
34
30
18
35
36
37
33
31
4
29

CF80 CASE IH CROSS FLOW COMBINE

F270(02) CAB- SEAT

Ref	Part Number	Qty	Description
37	895-11008	8	WASHER, M8 x 16 x 1.6, Washer 8,4 DIM 25 ST
38	03221323	1	STRIP, PROTECTION, Protective strip

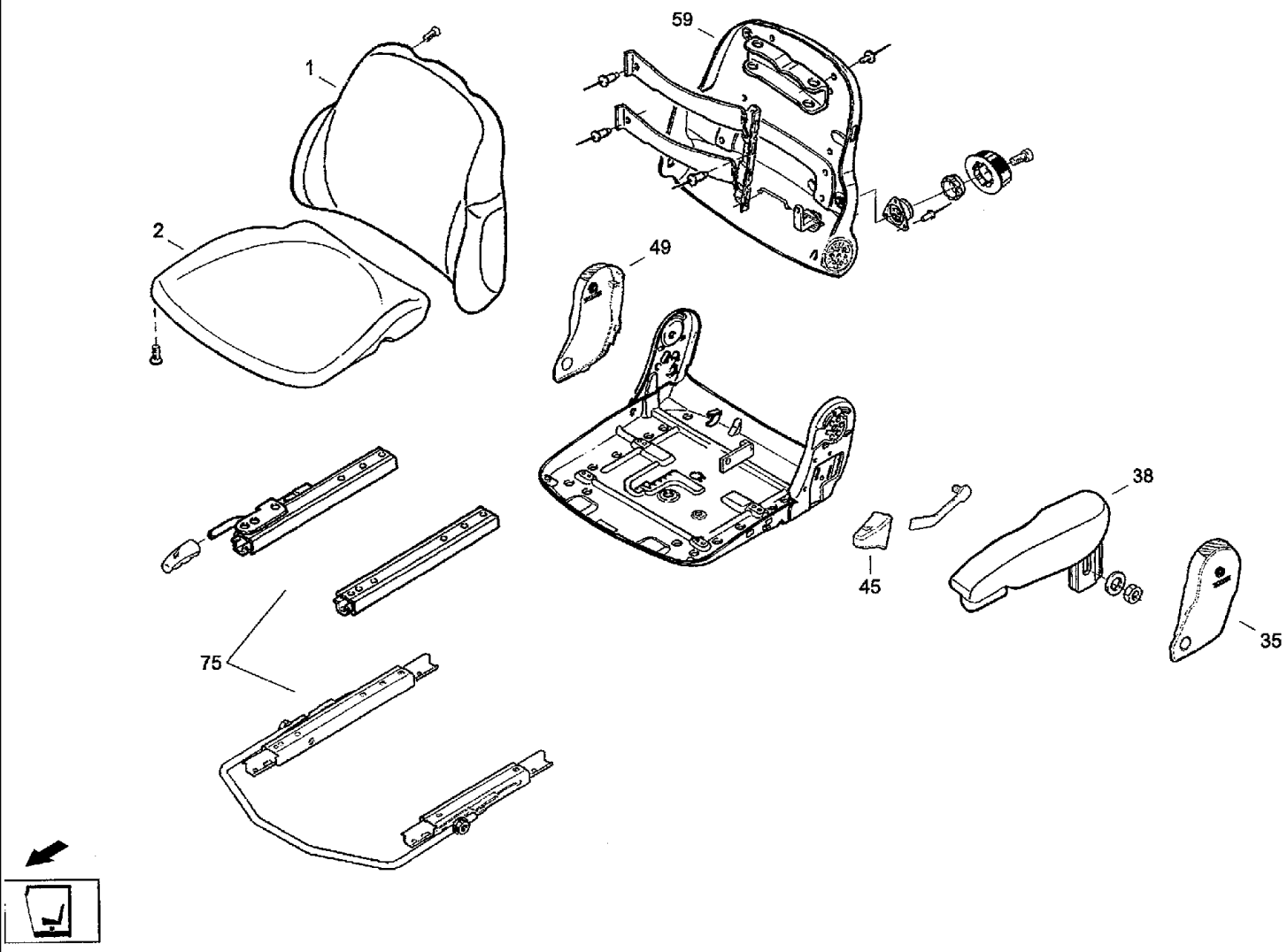
59
1
2
49
38
45
35
75
F270

CF80 CASE IH CROSS FLOW COMBINE

F272(01) CAB- DRIVER'S SET

Ref	Part Number	Qty	Description
1	31346745	1	CUSHION, Cushion ROCKENLEHNE
2	31346753	1	CUSHION, Cushion SITZ
35	31346761	1	COVER, Cover 1
38	31346778	1	ARMREST, Arm rest 1
45	31347207	1	HANDLE, Handle F.VERST.RCICKENL
49	31347215	1	COVER, Cover r
59	31347223	1	SUPPORT, Support F.BANDSCHEIBEN
75	31347231	1	RAIL ASSY., Adjusting bar SATZ
101	31347248	1	ISOLATOR, Suspension HORIZONTAL
111	31347256	25	PLASTIC PLUG, Holding stopper
113	31347264	1	SHOCK ABSORBER, Shock absorber F.FEDERUNG
115	31347272	1	SET OF PARTS, Wearing parts F.FEDERUNG
119	31347280	1	GAUGE, Level indication
121	31347297	1	HANDLE, Handle F.HOHENVERST.
122	31347303	1	LEVER ASSY., Operation F.HOHENVERST.
126	31347311	2	SPRING, Tension spring
129	31347328	1	HANDLE, Handle F.FEDERUNG
131	31347336	1	SHOCK ABSORBER, Shock absorber
134	31347344	1	ARM ASSY., Rocker
135	31347352	2	SET SCREW, Roller F.FEDERUNG
138	31347360	2	BEARING, Fixed bearing
142	31347377	4	ROLL, Roller
143	31347385	1	SPRING, Air spring
154	31347393	1	HOSE, Air tube
155	31347408	1	CABLE, Ground strap

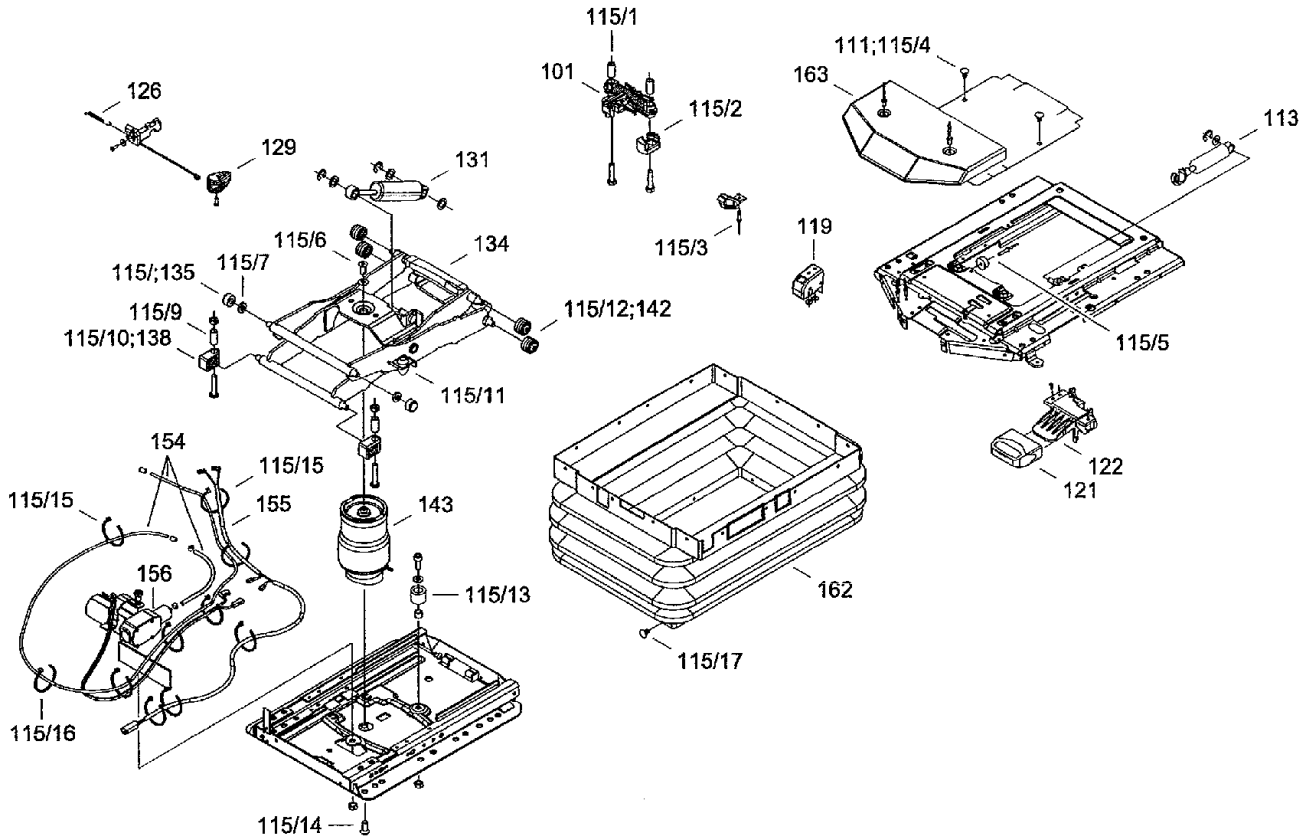
115/1
101
115/2
111;115/4
163
113
126
129
131
115/3
119
115/6
134
115/;135
115/7
115/9
115/10;138
115/12;142
115/5
115/11
154
115/15
115/15
155
143
156
115/13
162
115/17
122
121
115/16
115/14

◀F270

CF80 CASE IH CROSS FLOW COMBINE

F272(02) CAB- DRIVER'S SET

Ref	Part Number	Qty	Description
156	31347416	1	COMPRESSOR, Compressor 12V
162	31347666	1	BELLOWS, Bellows
163	31347674	1	COVER ASSY, Cover

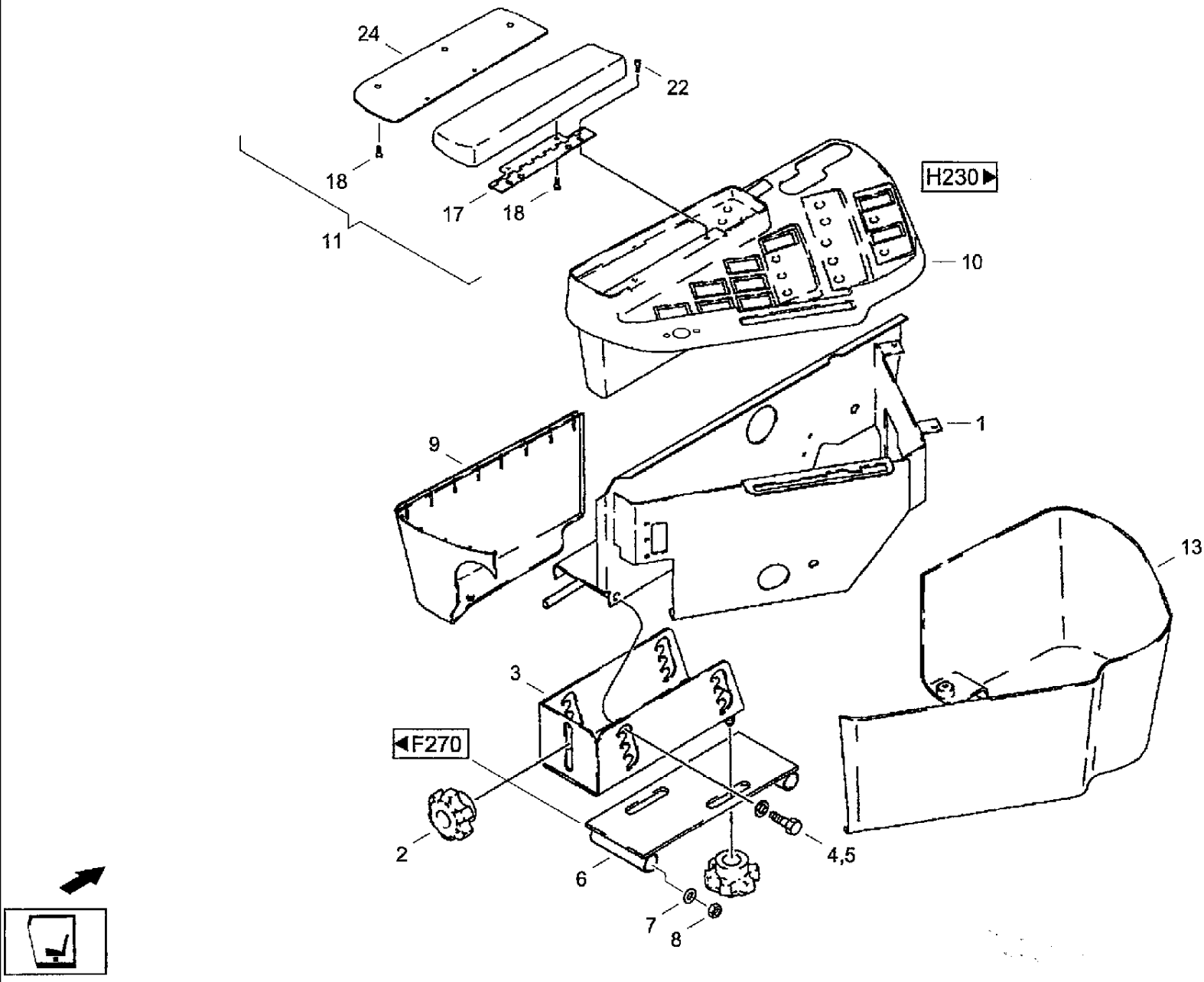
24
22
18
17
18
11
H230
10
1
9
13
3
F270
2
4,5
6
7
8

CF80 CASE IH CROSS FLOW COMBINE

F280(01) CAB- CONTROL PANEL [CF80K]

Ref	Part Number	Qty	Description
1	31338214	1	HOUSING, Housing k
2	31338175	3	NUT, Star handle
3	117107A2	1	SUPPORT, Slide rail
4	814-8035	4	BOLT, Hex, M8 x 35, 8.8, Hex bolt M8x35 ISO4014 8.8
5	06502638	4	WASHER, Washer R9DIN440100HV
6	03221391	1	PLATE, Mounting plate
7	895-11016	2	WASHER, M16 x 30 x 3, Washer 17DIN125ST
8	DF004776	2	NUT, Hex nut M16 DIN985 8
9	130412A1	1	HOUSING, Cover
10	03221678	1	BRACKET, Control panel VAR.K
11	128970A3	1	ARMREST, Support
13	118321A1	1	SKIRT, Cover
17	128849A2	1	HINGE, Hinge
18	185544A1	5	SCREW, Screw
22	841-4410	2	SCREW, Hex Wash Hd, M4 x 10, Hex bolt M.BundM4x10
24	185546A1	1	PLATE, LARGE, Plate

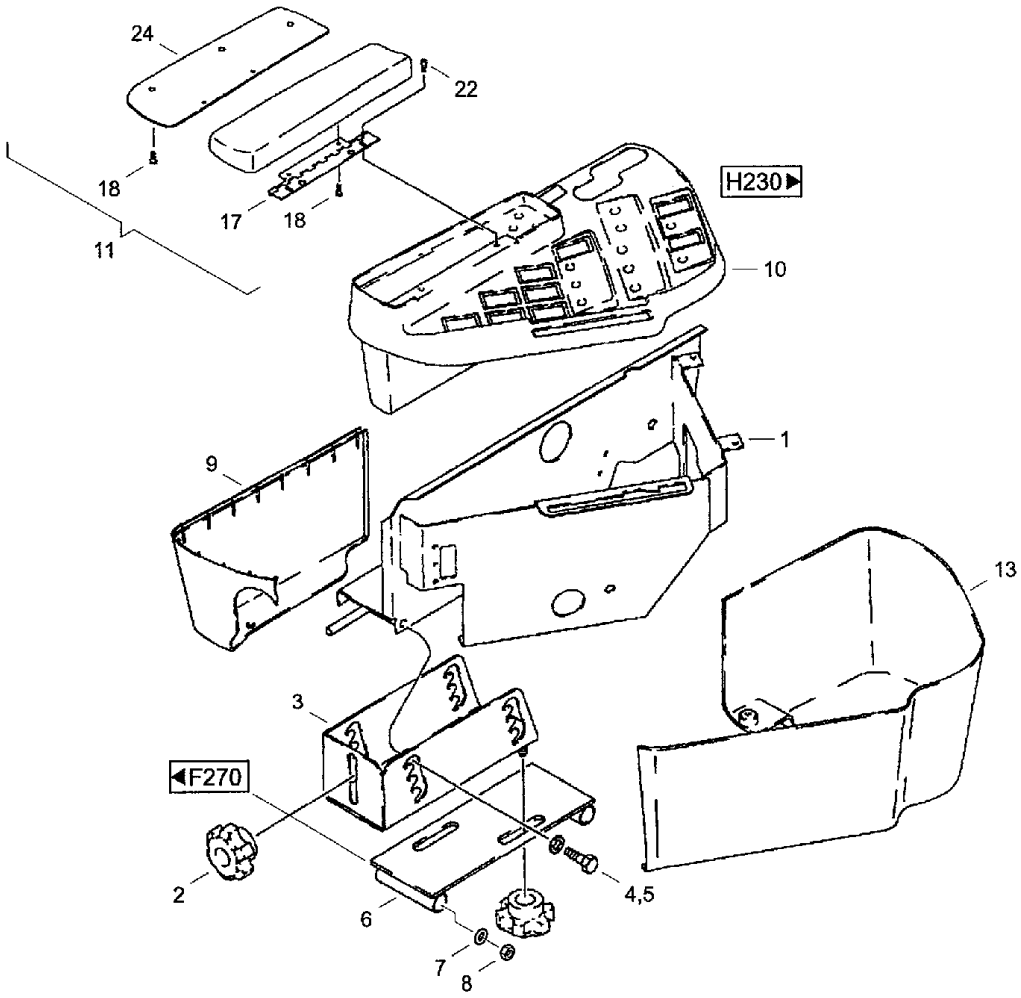
24
22
18
17
18
11
H230
10
1
9
13
3
F270
2
6
4,5
7
8

CF80 CASE IH CROSS FLOW COMBINE

F280(02) CAB- CONTROL PANEL [CF80P]

Ref	Part Number	Qty	Description
1	31338214	1	HOUSING, Housing k
2	31338175	3	NUT, Star handle
3	117107A2	1	SUPPORT, Slide rail
4	814-8035	4	BOLT, Hex, M8 x 35, 8.8, Hex bolt M8x35 IS04014 8.8
5	06502638	4	WASHER, Washer R9 DIN440 100HV
6	03221391	1	PLATE, Mounting plate
7	895-11016	2	WASHER, M16 x 30 x 3, Washer 17DIN125ST
8	DF004776	2	NUT, Hex nut M16DIN9858
9	130412A1	1	HOUSING, Cover
10	31338247	1	PANEL, INSTRUMENTS, Control panel VAR.P
11	128970A3	1	ARMREST, Support
13	118321A1	1	SKIRT, Cover
17	128849A2	1	HINGE, Hinge
18	185544A1	5	SCREW, Screw
22	841-4410	2	SCREW, Hex Wash Hd, M4 x 10, Hex boltM.BundM4x10
24	185546A1	1	PLATE, LARGE, Plate

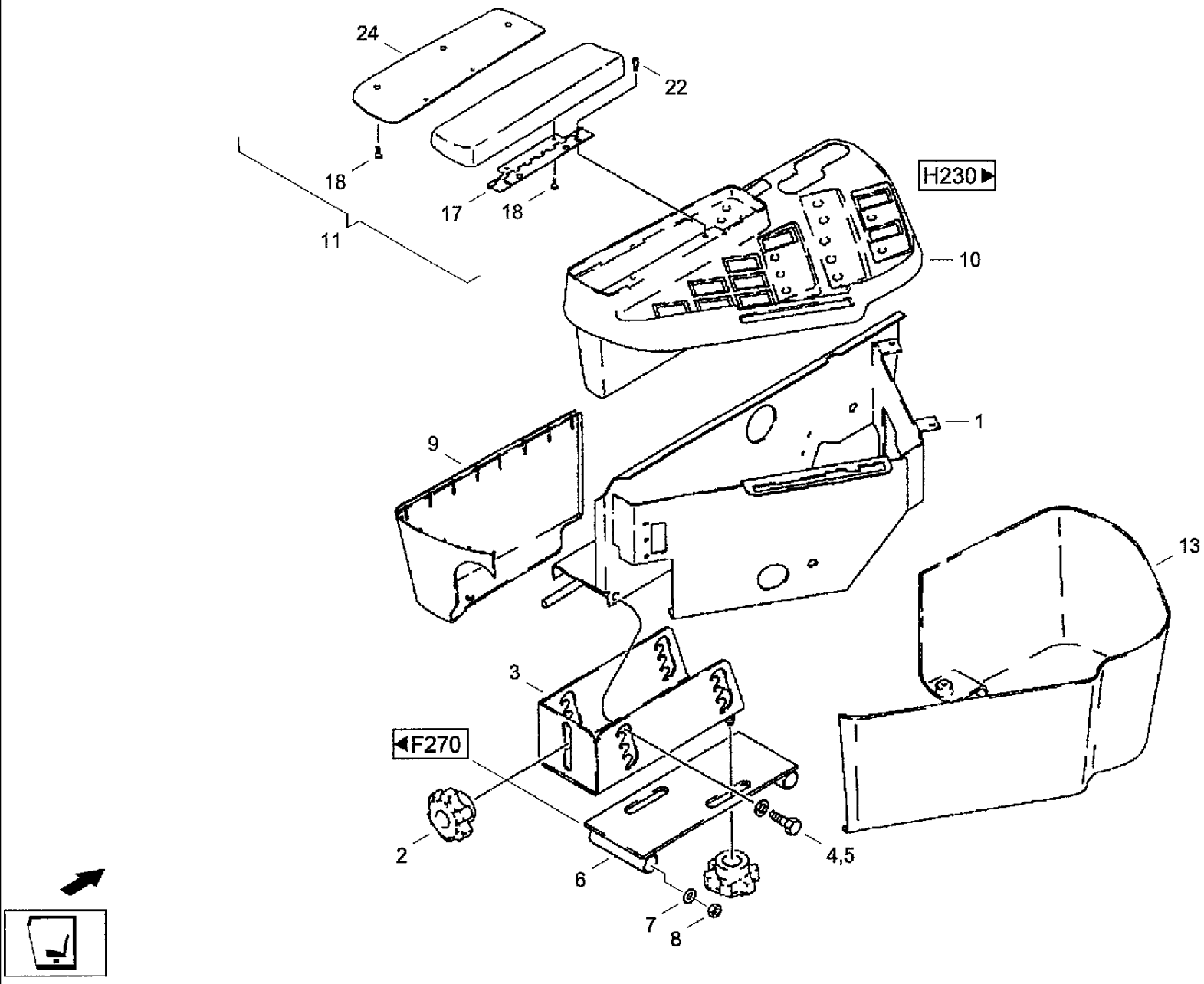
24
22
18
17
18
11
H230
10
1
9
13
3
F270
2
4,5
6
7
8

CF80 CASE IH CROSS FLOW COMBINE

F280(03) CAB- CONTROL PANEL [CF80Q]

Ref	Part Number	Qty	Description
1	31338214	1	HOUSING, Housing k
2	31338175	3	NUT, Star handle
3	117107A2	1	SUPPORT, Slide rail
4	814-8035	4	BOLT, Hex, M8 x 35, 8.8, Hex bolt M8x35 IS04014 8.8
5	06502638	4	WASHER, Washer R9DIN440100HV
6	03221391	1	PLATE, Mounting plate
7	895-11016	2	WASHER, M16 x 30 x 3, Washer 17DIN125ST
8	DF004776	2	NUT, Hex nut M16DIN9858
9	130412A1	1	HOUSING, Cover
10	31339625	1	PANEL, INSTRUMENTS, Control panel VAR.Q
11	128970A3	1	ARMREST, Support
13	118321A1	1	SKIRT, Cover
17	128849A2	1	HINGE, Hinge
18	185544A1	5	SCREW, Screw
22	841-4410	2	SCREW, Hex Wash Hd, M4 x 10, Hex bolt M.BUND M4x10
24	185546A1	1	PLATE, LARGE, Plate

F290(01) CAB- GROUND SPEED CONTROL LEVER [CF80P]

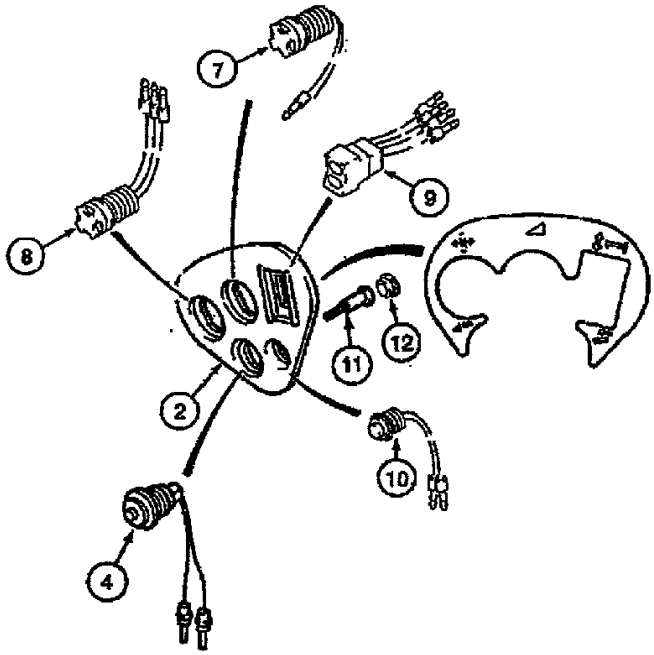

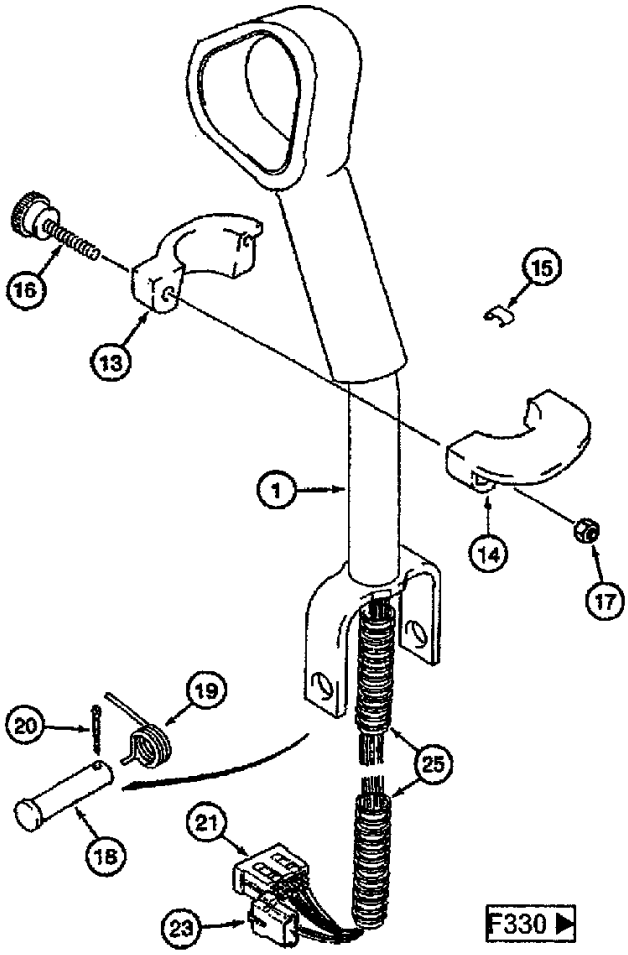



CF80 CASE IH CROSS FLOW COMBINE

F290(01) CAB- GROUND SPEED CONTROL LEVER [CF80P]

Ref	Part Number	Qty	Description
1	113314A2	1	LEVER, CONTROL, Control lever VAR.P
2	142589A1	1	PLATE, LARGE, Plate
3	144111A2	1	DECAL, Decal
4	143114A1	1	SWITCH, Switch
7	132001A1	1	SWITCH, Switch
8	118680A1	1	SWITCH, Switch
9	118683A1	1	SWITCH, Switch
10	127597A1	1	SWITCH, Switch
11	260-54310	1	SCREW, SELF TAPPING, Cross Pan Hd, #6 x 5/8", Self-tapping screw #6-20x5/8 '
12	353-402	1	PLUG, Dome, .375" hole, Nylon, Plug 3/8'
13	116150A1	1	SUPPORT, Support
14	116152A1	1	SUPPORT, Support
15	1343962C1	1	CLIP, ELECTRICAL, Clip
16	96860C1	1	KNOB, Knurled screw
17	425-104	1	NUT, 1/4"-20, G5,
18	27-8343	1	PIN, CLEVIS, 1/2" x 3 7/16"', Shackle bolt 1/2 'x3 7/16""
19	128593A1	1	SPRING, Torsion spring
20	432-816	1	PIN, SPLIT (COTTER), 1/8" x 1",
21	225388C1	1	CONNECTOR, Connector
23	225350C1	1	CONNECTOR, Connector
25	120344C1	1	CONDUIT, Spout

F290(02) CAB- GROUND SPEED CONTROL LEVER [CF80Q]

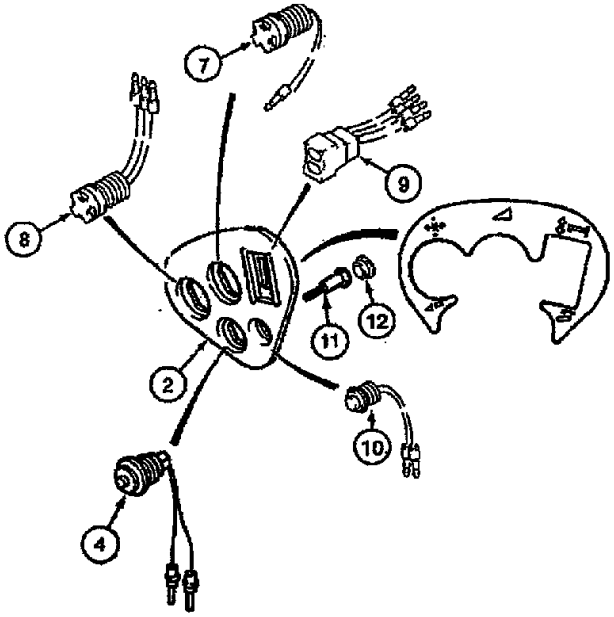

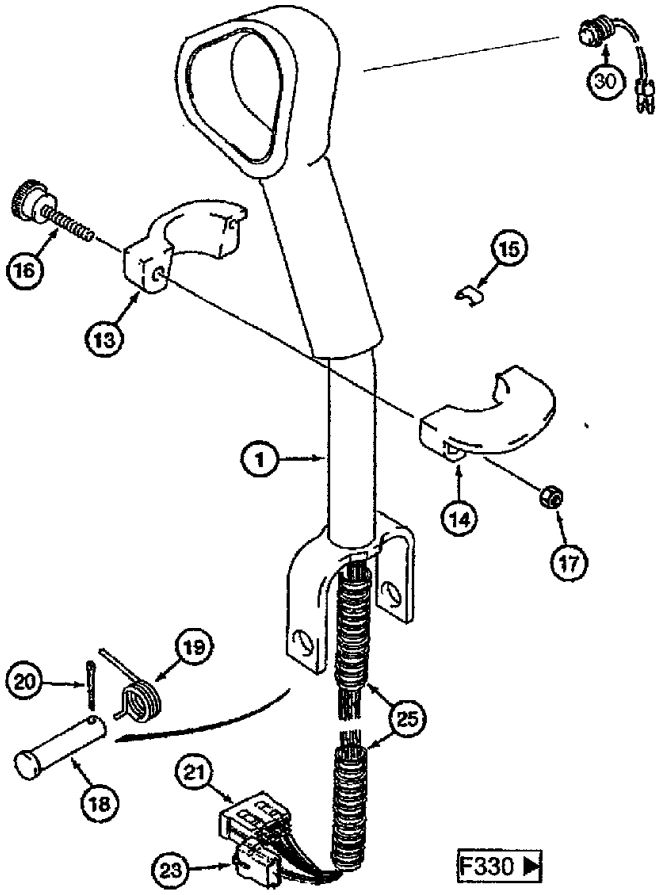



CF80 CASE IH CROSS FLOW COMBINE

F290(02) CAB- GROUND SPEED CONTROL LEVER [CF80Q]

Ref	Part Number	Qty	Description
1	03221355	1	LEVER, CONTROL, Control lever VAR.Q
2	142589A1	1	PLATE, LARGE, Plate
3	144111A2	1	DECAL, Decal
4	143114A1	1	SWITCH, Switch
7	132001A1	1	SWITCH, Switch
8	118680A1	1	SWITCH, Switch
9	118683A1	1	SWITCH, Switch
10	127597A1	1	SWITCH, Switch
11	260-54310	1	SCREW, SELF TAPPING, Cross Pan Hd, #6 x 5/8", Self-tapping screw #6-20x5/8 '
12	353-402	1	PLUG, Dome, .375" hole, Nylon, Plug 3/8'
13	116150A1	1	SUPPORT, Support
14	116152A1	1	SUPPORT, Support
15	1343962C1	1	CLIP, ELECTRICAL, Clip
16	96860C1	1	KNOB, Knurled screw
17	425-104	1	NUT, 1/4"-20, G5,
18	27-8343	1	PIN, CLEVIS, 1/2" x 3 7/16"', Shackle bolt 1/2 \3 7/16""
19	128593A1	1	SPRING, Torsion spring
20	432-816	1	PIN, SPLIT (COTTER), 1/8" x 1",
21	225388C1	1	CONNECTOR, Connector
23	225350C1	1	CONNECTOR, Connector
25	120344C1	1	CONDUIT, Spout
30	31340112	1	SWITCH, Key sw, F.FAHRHEBEL

F300 CAB- GROUND SPEED CONTROL LEVER, VARIOUS COMPONENTS

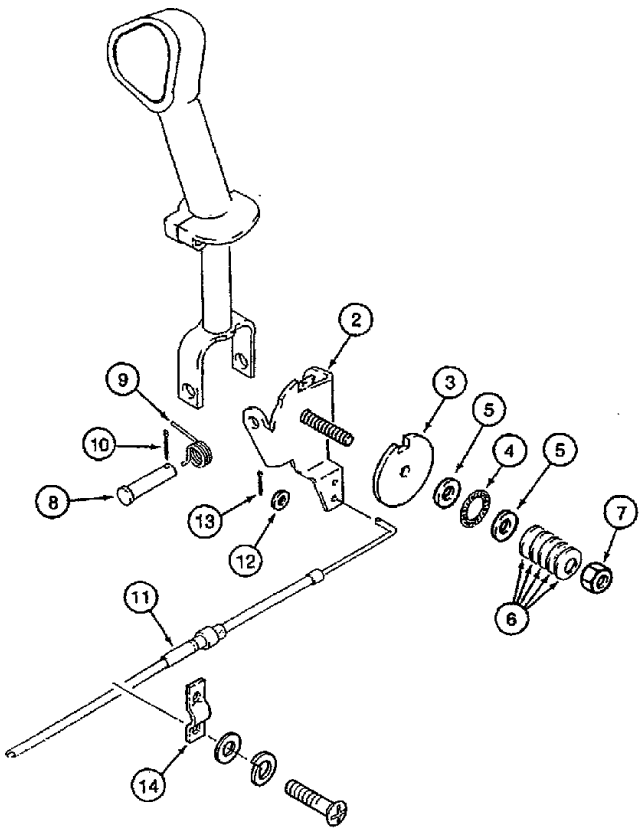

◀F290

CF80 CASE IH CROSS FLOW COMBINE

F300 CAB- GROUND SPEED CONTROL LEVER, VARIOUS COMPONENTS

Ref	Part Number	Qty	Description
2	113318A2	1	SUPPORT, Support
3	31338126	1	DISC, Washer
4	159688R91	1	BEARING, Bearing
5	496-81010	2	WASHER, Washer 15/32'x1""
6	97022151	6	WASHER, SPRING, Wave washer spring B12 DIN137 FST
7	06116235	1	NUT, Hex nut M12 DIN985 8
8	27-8343	1	PIN, CLEVIS, 1/2" x 3 7/16"', Shackle bolt 1/2'x37/16""
9	128593A1	1	SPRING, Torsion spring
10	733-3232	1	PIN, SPLIT (COTTER), M3.2 x 32, Splint pin 3,2x32 DIN94 ST
11	31338095	1	BOWDEN CONTROL, Bowden cable F.FAHRHEBEL
12	895-11005	2	WASHER, M5 x 10 x 1, Washer 5.3DIN125ST
13	03307324	1	PIN, SPLIT (COTTER), Splint pin 1,6x16DIN94ST
14	A75815	1	CLAMP, Rubber lug
15	614-4010	2	BOLT, Hex, M4 x 10, 8.8, Full Thd, Hex bolt M4x10 ISO4017 8.8
30	892-11004	2	WASHER, LOCK, M4, Spring washer A4 DIN127 FST
31	895-11004	2	WASHER, M4, Washer 4,3 DIN125 ST

CF80 CASE IH CROSS FLOW COMBINE

F310 CAB- THROTTLE LEVER

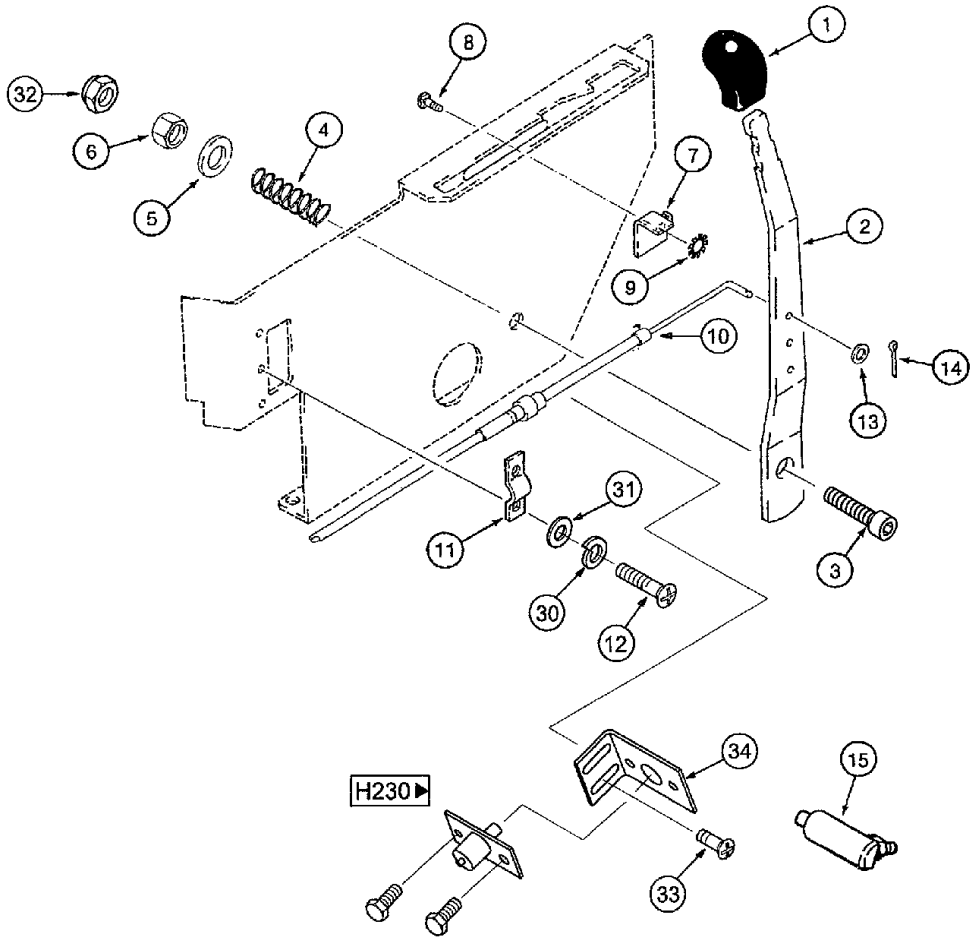

CF80 CASE IH CROSS FLOW COMBINE

F310 CAB- THROTTLE LEVER

Ref	Part Number	Qty	Description
1	134071A1	1	KNOB, Knob
2	116434A1	1	LEVER, Lever
3	06224985	1	SCREW, Cheese-head screw M10x70 DIN6912 8.8
4	31338118	1	COMPRESSION SPRING, Pressure spring
6	825-1410	1	NUT, M10, Cl 8,
7	116433A2	1	STOP, Angle
8	07751242	1	Flat-round-head screw M6x16DIN6038.8
9	893-11006	1	WASHER, Ext Tooth, M6, Toothed washer A6.4 DIN6797 FST
10	115396A1	1	CABLE, Bowden cable
11	A75815	1	CLAMP, Rubber lug
12	614-4010	8	BOLT, Hex, M4 x 10, 8.8, Full Thd, Hex bolt M4X10ISO40178.8
13	895-11005	8	WASHER, M5 x 10 x 1, Washer 5,3 DIN125 ST
14	03307324	1	PIN, SPLIT (COTTER), Splint pin 1,6x16 DIN94 ST
15	1977009C4	1	BALL JOINT, Ball joint
30	892-11004	6	WASHER, LOCK, M4, Spring washer A4 DIN127 FST
31	895-11004	9	WASHER, M4, Washer 4,3 DIN125 ST
32	06224993	1	NUT, Hex nut M10 ISO4032 8
33	06382653	2	SCREW, Self-tapping screw ST4,8x19-F-H DIN7981
34	31338150	1	HOLDER, Support F.MOTORABSTELLER
5	895-15010	1	WASHER, M11 x 24 x 2, Washer 11

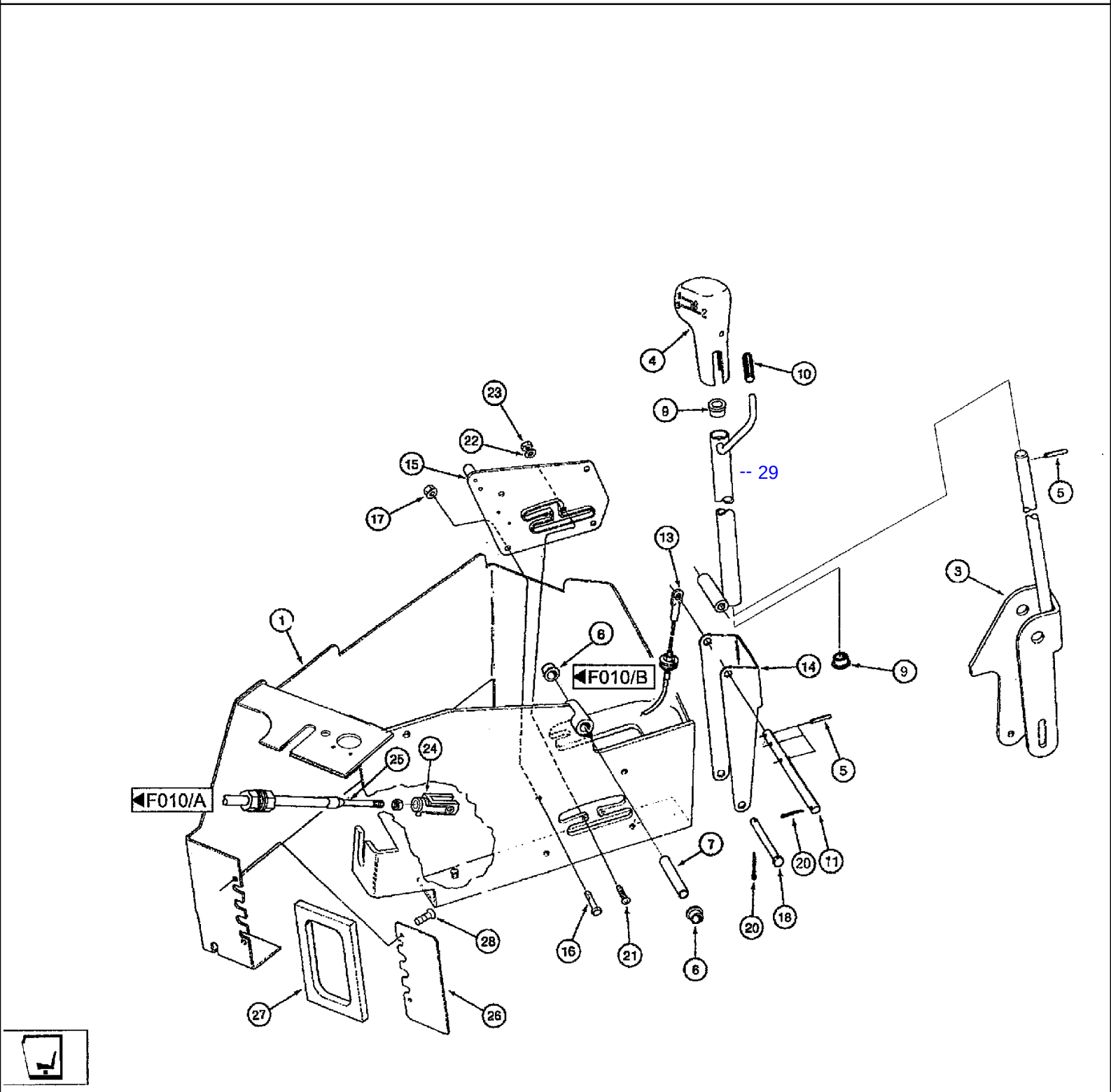
-- 29
F010/A
F010/B

CF80 CASE IH CROSS FLOW COMBINE

F320 CAB- TRANSMISSION- GEAR SHIFT CONTROLS

Ref	Part Number	Qty	Description
1	31338222	1	HOUSING, Housing F.GETRIEBESCHALTUNG Ф032-01.02.000 КРОНШТЕЙН ОПОРНЫЙ
3	122751A3	1	STEM, Lever
4	31338142	1	KNOB, Button F.SCHALTHEBEL Ф032-01.01.006 РУКОЯТКА
5	06200481	3	PIN, Roll pin 4x28 DIN1481 Ф032-01.01.010 РЫЧАГ
6	S115001	2	BEARING, Sleeve Ф032-01.01.003 ВТУЛКА
7	122199A1	1	PIN, PIVOT, Pin Ф032-01.01.004 ОСЬ
9	31338263	2	GROMMET, Grommet F.DURCHFtlHRUNG
10	125803A1	1	SLEEVE, Cap
11	122197A2	1	SPLIT PIN/SAFETY PIN, Pin Ф032-01.01.002 ОСЬ
13	115398A1	1	CABLE, Bowden cable
14	124714A2	1	PLATE, LARGE, Link k Ф032-01.01.001 КРОНШТЕЙН
15	122757A3	1	GUIDE, Spool Ф032-01.01.001 ЗАДВИЖКА
16	614-6020	4	BOLT, Hex, M6 x 20, 8.8, Hex bolt M6x20ISO40178.8
17	060527480	4	NUT, Hex nut M6 DIN985 8
18	427-6325	1	PIN, CLEVIS, 3/8" x 3 1/4", Shackle bolt 3/8ZOLL x3 1/4ZOLL Ф032-01.01.005 ПАЛЕЦ
20	06400544	2	PIN, SPLIT (COTTER), Splint pin 2,5x18 DIN94ST
21	614-4020	2	BOLT, Hex, M4 x 20, 8.8, Full Thd,
22	895-11004	2	WASHER, M4, Washer 4.3DIN125ST
23	06267136	2	Hex nut M4 DIN985 8
24	31338062	2	FORK, SHIFTER, Yoke M.FEDERKLAPPBOLZEN ф032-00.00.002 ВИЛКА
25	31338101	1	CABLE, Cable
26	122750A1	1	PLATE, Plate
27	122758A1	1	GASKET, Seal
28	03020456	2	SCREW, Hex bolt M5x12-C-Z DIN7500 ST
29		1	РЫЧАГ Ф032-01.01.020

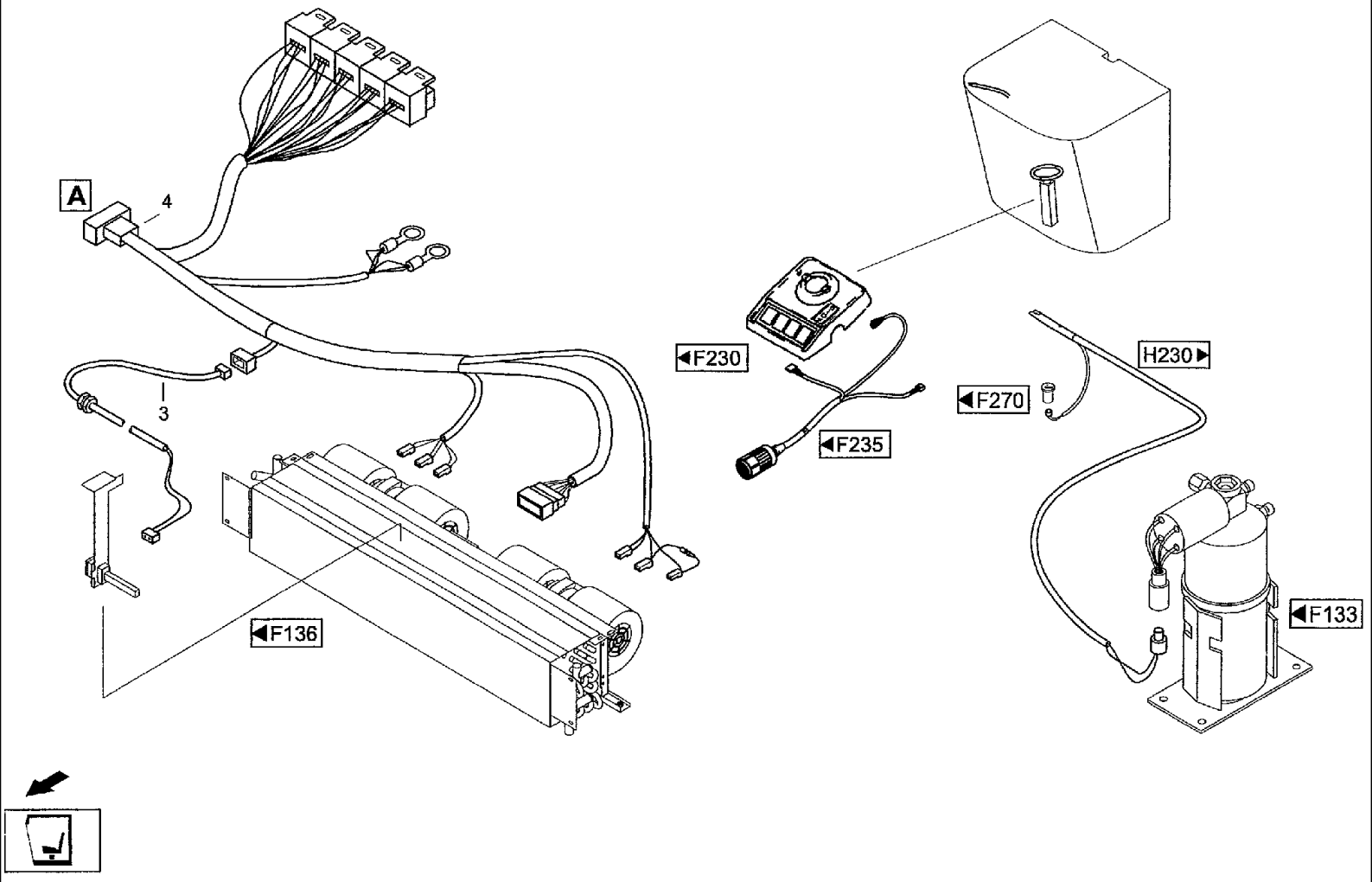
A
4
3
F136
F230
F235
F270
H230
F133

CF80 CASE IH CROSS FLOW COMBINE

F330(01) CAB- ELECTRICAL EQUIPMENT [CF80K]

Ref	Part Number	Qty	Description
3	31337496	1	HARNESS, Whring loom KLIMAFOHLER
4	31337502	1	HARNESS, Whring loom KLIMA
5	03221679	1	HARNESS, Whring loom KABINE
6	31337527	1	HARNESS, Whring loom SPIEGELVERSTELLUNG
7	072001482	1	CABLE, Cable rd, UMLEUCHTE
8	03221680	1	RESISTOR, Resistor 68 OHM
9	03221682	1	RESISTOR, Resistor 470 OHM
10	03221683	1	SUPPORT, Holding plate
11	614-5010	1	SCREW, Hex, M5 x 10, 8.8, Full Thd, Hex bolt M5X10IS040178.8
12	03221684	4	SCREW, Fillister head screw M2,5x14-H D1N7985 5.8
13	03221685	4	WASHER, LOCK, Toothed washer A2.5 DIN6797 FST
14	03221686	4	NUT, Hex nut M2.5 IS04032 6

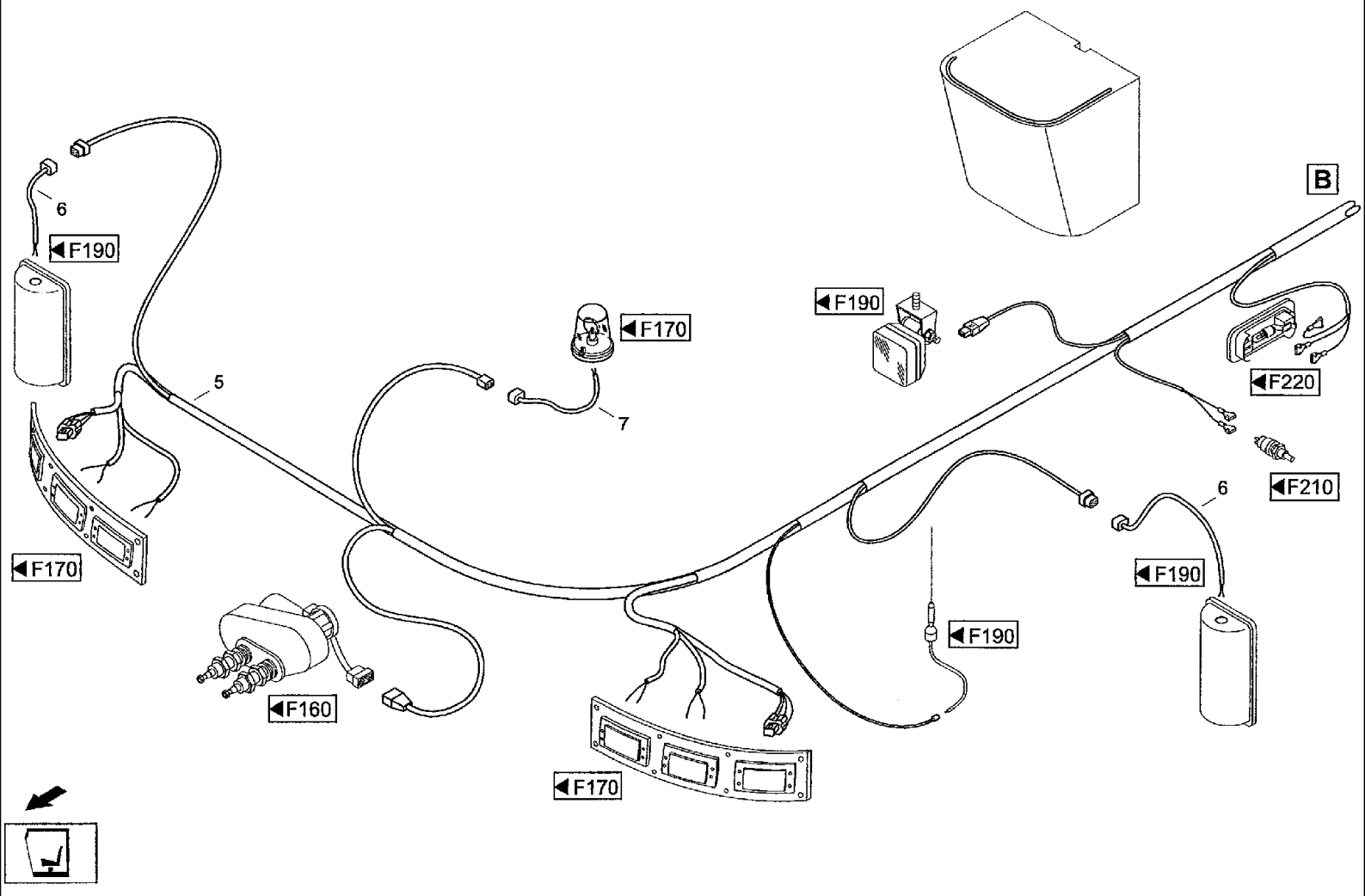
6
F190
5
F170
F170
7
F160
F170
F190
F190
B
F220
F210
6
F190

CF80 CASE IH CROSS FLOW COMBINE

F330(02) CAB- ELECTRICAL EQUIPMENT [CF80P/CF80Q]

Ref	Part Number	Qty	Description
3	31337496	1	HARNESS, Whring loom KLIMAFUHLER
4	31337502	1	HARNESS, Whring loom KLIMA
5	03221582	1	HARNESS, Whring loom KABINE
6	31337527	1	HARNESS, Whring loom SPIEGELVERSTELLUNG
7	072001482	1	CABLE, Cable RUNDUMLEUCHTE

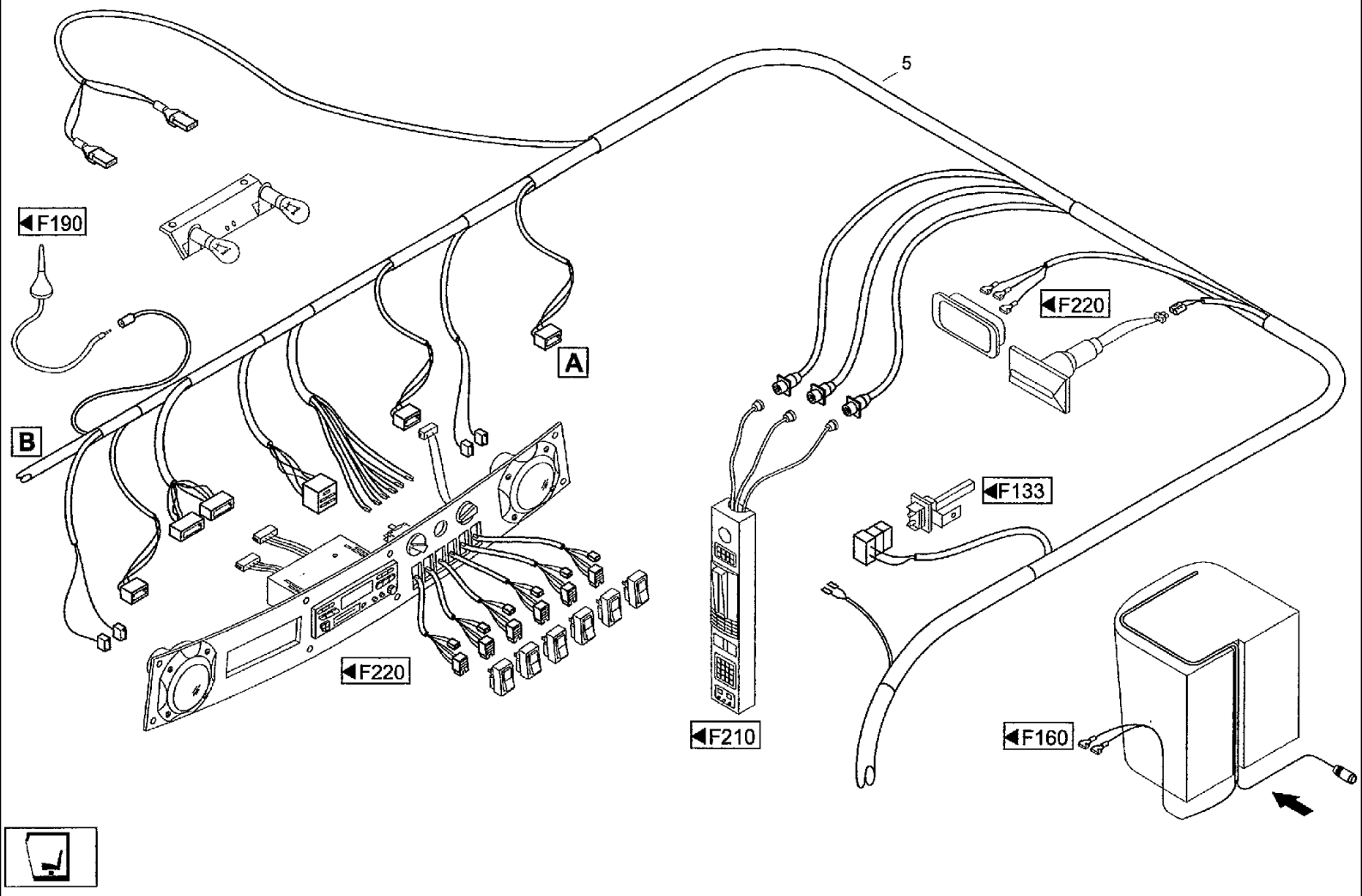
5
F190
A
B
F220
F210
F220
F133
F160

CF80 CASE IH CROSS FLOW COMBINE

F330(03) CAB- ELECTRICAL EQUIPMENT [CF80P/CF80Q]

Ref	Part Number	Qty	Description
3	31337496	1	HARNESS, Whring loom KLIMAFOHLER
4	31337502	1	HARNESS, Whring loom KLIMA
5	03221582	1	HARNESS, Whring loom KABINE
6	31337527	1	HARNESS, Whring loom SPIEGELVERSTELLUNG
7	072001482	1	CABLE, Cable RUNDUMLEUCHTE

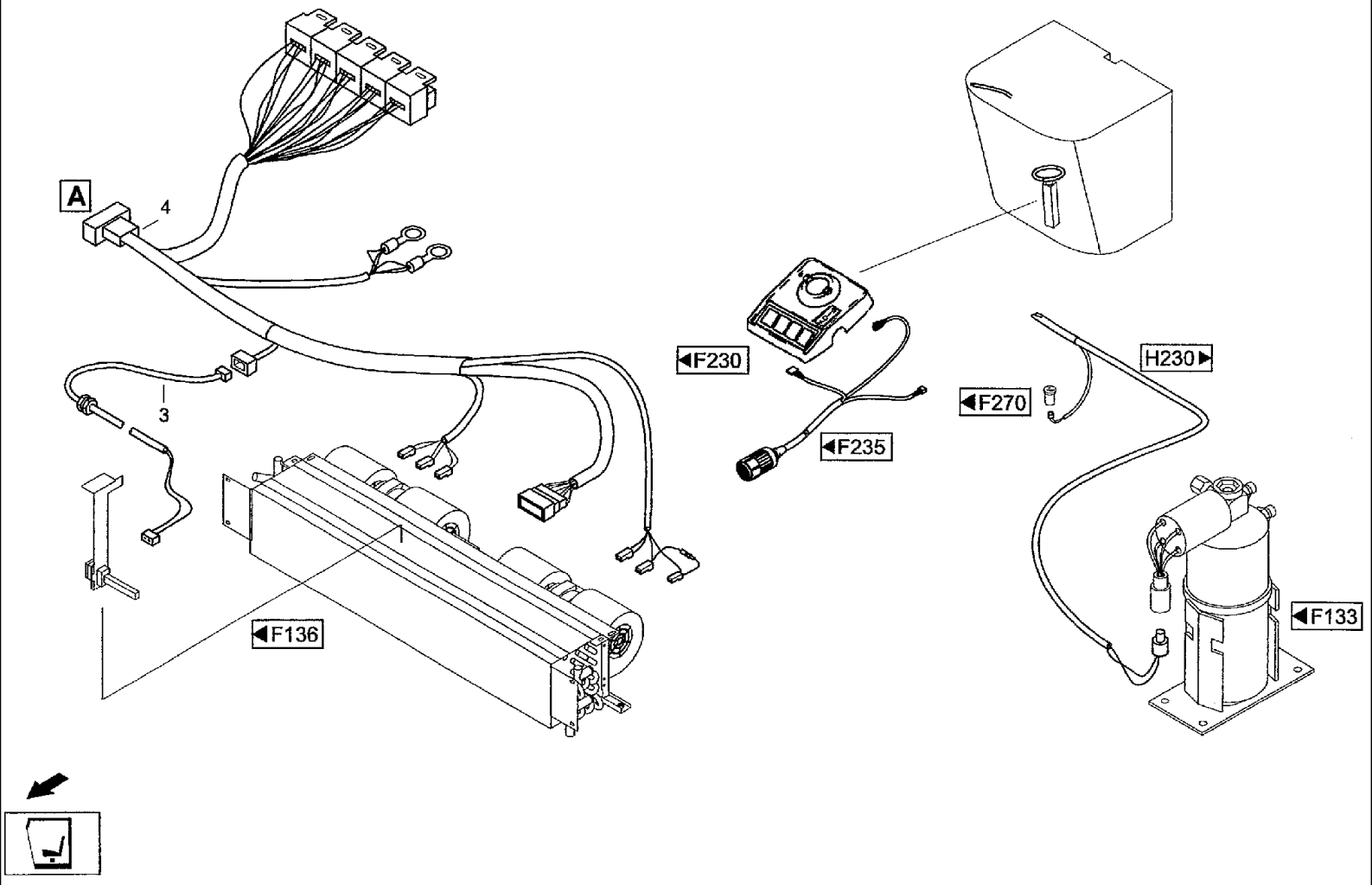
A
4
3
F136
F230
F235
F270
H230
F133

CF80 CASE IH CROSS FLOW COMBINE

F330(04) CAB- ELECTRICAL EQUIPMENT [CF80P/CF80Q]

Ref	Part Number	Qty	Description
3	31337496	1	HARNESS, Whring loom KLIMAFOHLER
4	31337502	1	HARNESS, Whring loom KLIMA
5	03221582	1	HARNESS, Whring loom KABINE
6	31337527	1	HARNESS, Whring loom SPIEGELVERSTELLUNG
7	072001482	1	CABLE, Cable RUNDUMLEUCHTE

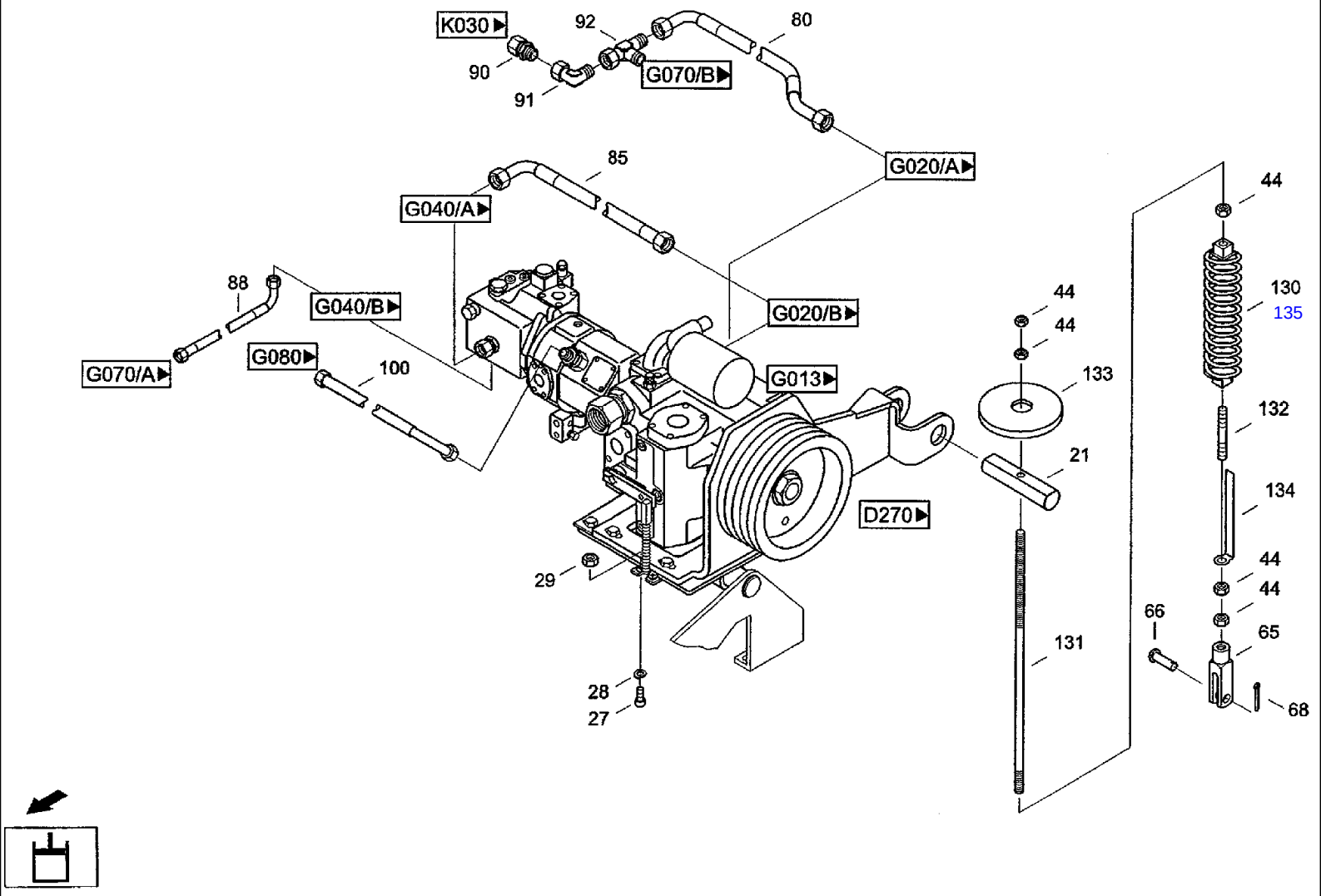
K030
92
80
90
G070/B
91
G020/A
85
G040/A
44
88
G040/B
G020/B
130
135
44
G070/A
G080
100
G013
133
132
21
134
D270
44
44
29
66
65
131
28
27
68

CF80 CASE IH CROSS FLOW COMBINE

G010 HYDRAULIC SYSTEM- PUMP SYSTEM, VARIOUS COMPONENTS

Ref	Part Number	Qty	Description
21	061068277	1	PIN, LARGE, Tens, bolt Hy528 Г000-20.00.004 ПАЛЕЦ
27	864-5016	2	SCREW, Hex Soc Hd, M5 x 16, 8.8, Cheese-head screw M5X16DIN9128.8
28	892-11005	2	WASHER, LOCK, M5, Spring washer A5 DIN127 FST
29	825-1405	2	NUT, M5, Cl 8, Hex nut M5 IS04032 8
44	825-1416	5	NUT, M16, Cl 8,
65	97058015	1	CRADLE, Yoke G 16x32 DIN71752 9S20K Г000-20.00.001 ВИЛКА
66	728-1640	1	PIN, CLEVIS, M16 x 40, Bolt B16H1 1x40x34 DIN1444ST Г000-20.00.005 ПАЛЕЦ
68	06401520	1	PIN, SPLIT (COTTER), Splint pin 4x25 DIN94 ST
80	06545898	1	HOSE, Hose line 1SN25DKOL90DKOL90- 2100
85	06549860	1	HOSE, Hose line 1 SN20DKOLDKOL90-450
88	06549418	1	HOSE, Hose line PHD113x500AOLAOL45
90	03440064	1	FITTING, Male connector EGE28-LM-ED
91	03433530	1	Threaded elbow joint EW28-L/OMD/A3C
92	03433828	1	Fitting XTR28/18/28-L
100	06545873	1	HOSE, Hose line 1SN16DKOLDKOL90-950
130	06707143	1	SPRING, TENSION, Tension spring C9x45x16D Г00-20.40.000 ПРУЖИНА
131	31301766	1	THREADED ROD, Threaded pin 245x16
132	31301774	1	THREADED ROD, Threaded pin 100x16 Г000-20.00.011 ШПИЛЬКА
133	31301782	1	ANCHOR, Spacer Г000-20.00.006 ПЛАСТИНА
134	31301790	1	PLATE, Meas. panel Г000-20.00.007 ПЛАСТИНА КОНТРОЛЬНАЯ
135		2	Г000-20.40.002 ВВЕРТЫШ

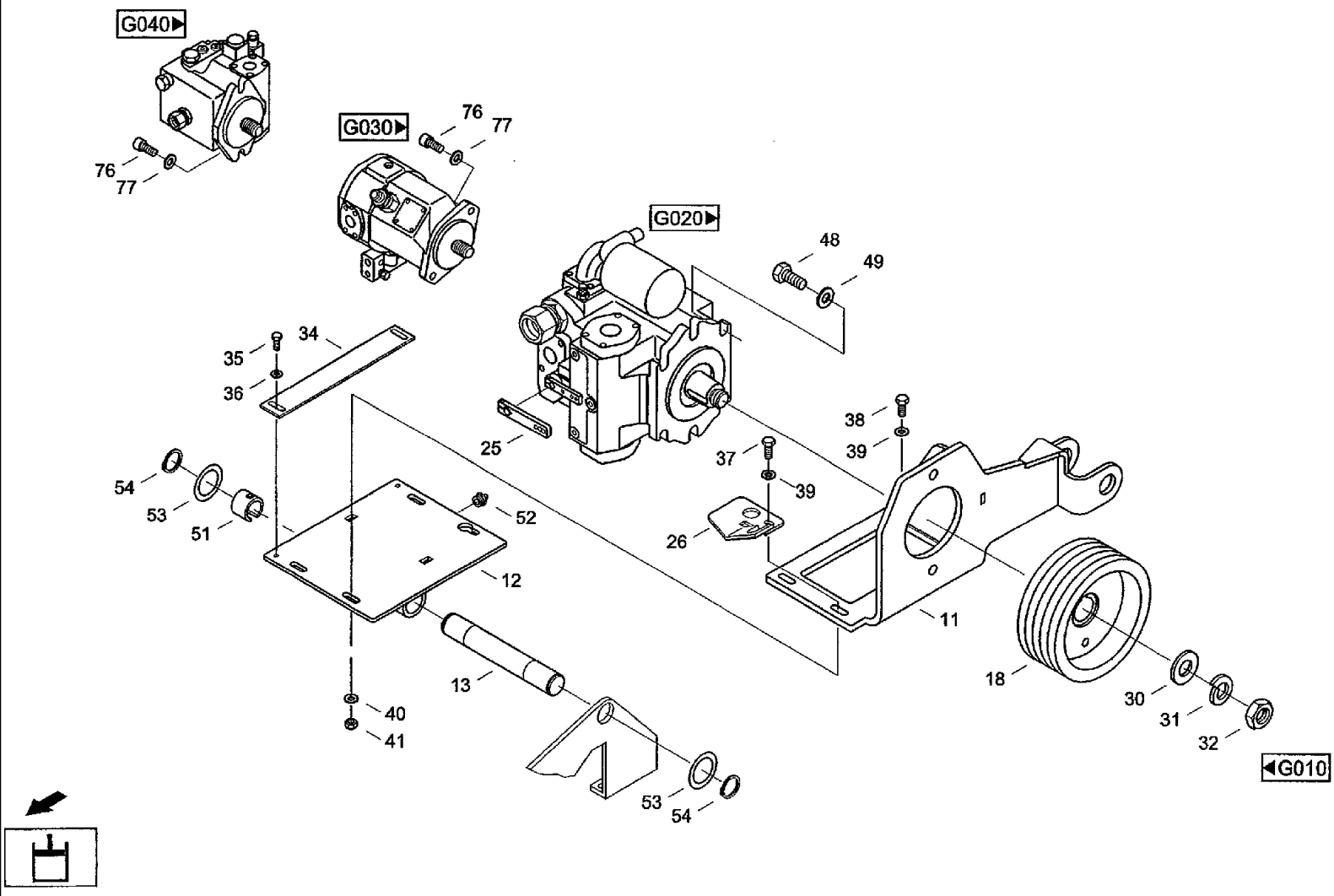
G040
G030
G020
G010
76
77
48
49
34
35
36
38
39
37
25
26
54
53
51
52
12
13
40
41
11
18
30
31
32

CF80 CASE IH CROSS FLOW COMBINE

G013 HYDRAULIC SYSTEM- PUMP SYSTEM

Ref	Part Number	Qty	Description
11	061068156	1	SUPPORT, Pump frame Г000-20.14.000 РАМА НАСОСА
12	061068211	1	SUPPORT, Swivel console Г000-20.50.000 ОПОРА НАСОСА
13	072010153	1	PIPE, Axle tube Г000-20.00.003 ПАЛЕЦ
18	061068252	1	PULLEY, Pulley HY528 Г000-20.10.001 ШКИВ
25	31286105	1	LEVER, CONTROL, Control lever A4Vg
26	061068180	1	SHEET, Connecting plate
30	060522396	1	WASHER, Washer 36 DIN126 Г000-20.10.002 ШАЙБА
31	060522402	1	WASHER, LOCK, Spring washer B36 DIN127 FST
32	060522410	1	NUT, Hex nut M36x3 DIN936 Г000-20.10.003 ГАЙКА М36*3
34	060099813	1	STOP, Stop Г000-20.00.002 ПЛАСТИНА
35	614-8016	2	BOLT, Hex, M8 x 16, 8.8,
36	06577028	2	WASHER, SPECIAL, Locking washer M8
37	614-12050	2	BOLT, Hex, M12 x 50, 8.8, Full Thd, Hex bolt M12x50 ISO4017 8.8
38	614-12040	2	BOLT, Hex, M12 x 40, 8.8, Full Thd,
39	06577060	4	WASHER, Locking washer B12
40	06562038	4	WASHER, Washer 13DIN7349ST
41	825-1412	4	NUT, M12, Cl 8, Hex nut M12 ISO4032 8
48	614-20040	2	BOLT, Hex, M20 x 40, 8.8, Hex bolt M20X40ISO40178.8
49	31285981	2	DISC, Washer 21x36x6
51	020464544	2	BUSHING, Bushing GLEITBUCHSE 04/10123 ВТУЛКА СКОЛЬЖЕНИЯ
52	03640754	1	NIPPLE, LUBE, Grease nippel CM8x1 DIN71412
53	021422792	2	DISC, Washer MDW-N14510-42x60x 3-RST
54	800-1140	2	RING, SNAP, M40, Ext, Snap ring 40x1,75DIN471 FST
76	864-12030	4	SCREW, Hex Soc Hd, M12 x 30, 8.8, Cheese-head screw M12x30 DIN912 8.8
77	895-11012	4	WASHER, M12 x 24 x 2.5, Washer 13DIN125ST

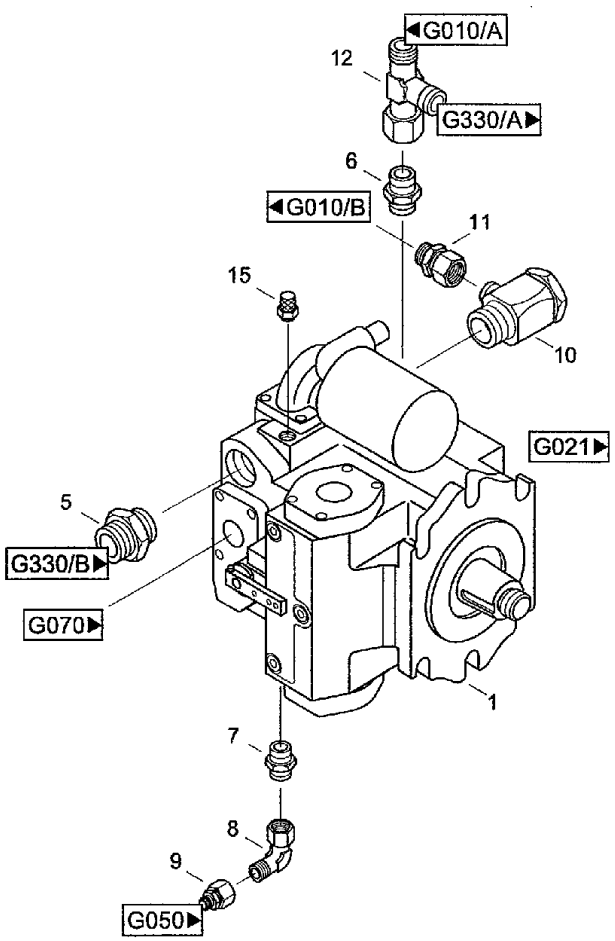
G010/A
12
G330/A
6
G010/B
11
15
10
G021
5
G330/B
G070
1
7
8
9
G050
G013

CF80 CASE IH CROSS FLOW COMBINE

G020 HYDRAULIC SYSTEM- PUMP [1-A4VG125]

Ref	Part Number	Qty	Description
1	061068107	1	PUMP, HYDRAULIC, Actuating pump A4VG1 25HWDL/32L-NxF
5	060516910	1	ADAPTER, Male connector GE42-LM-ED/OMD
6	03434990	1	ADAPTER, Male connector GE28-LM-ED/OMD
7	03433233	1	ADAPTER, Male connector GE12-L/M22x1,5-ED/ OMD/
8	03609111	1	NO DESCRIPTION, Threaded elbow joint EW12-L/OMD/A3C
9	03432400	1	CONE, Adapter flow reduc. RED12/10-L/OMD
10	03435018	1	TEE, Pivotong joint WH28-LM-KDS/OMD
11	03402452	1	CONE, Adapter flow reduc. RED28/22-UOMD
12	03435268	1	FITTING, Right-angle screwing EL28-L/OMD
15	060522435	1	FITTING, Screwing EMA3/12x1,5-ED

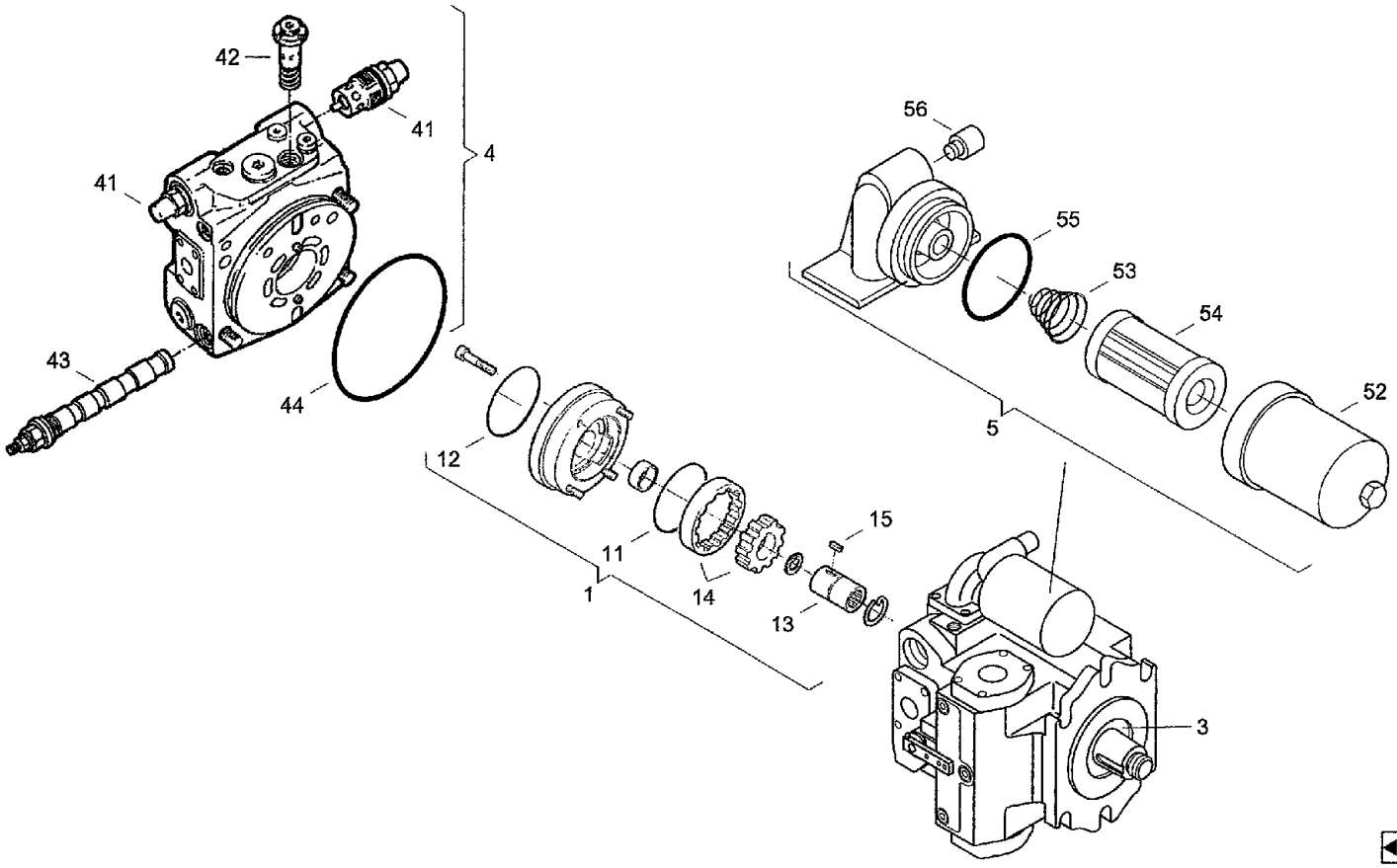
42
41
41
4
43
44
12
11
14
1
15
13
56
55
53
54
52
5
3
G020

CF80 CASE IH CROSS FLOW COMBINE

G021(01) HYDRAULIC SYSTEM- PUMP [2-A4VG125]

Ref	Part Number	Qty	Description
1	03001742	1	PUMP, HYDRAULIC, Internal gear pump A4VG125
2	03001437	1	BUTTON, Control unit HW-A4VG
3	03001750	1	SEALRING, Shaft seal A4VG125KON.
4	03001767	1	JUNCTION BLOCK, Plate A4VG125
5	03001775	1	FILTER ASSY., Filter k, A4VG125
6	03001373	1	SWITCH, Switch NI-A4VG
11	03001871	1	O-RING, O-ring 1 20,37x1, 78-S-NBR70
12	03001888	1	O-RING, O-ring 101,27x2,62-S-NBR70
13	03001896	1	SHAFT, DRIVE, Driving shaft
14	03002036	1	GEAR-SET, Wheelset
15	03002044	1	KEY, BUCKET TOOTHRT, Flat key
21	03002085	1	O-RING, O-ring 29,87x1, 78-S-NBR90
22	03002093	2	O-RING, O-ring 12,42x1 .78-S-NBR90
23	03002727	1	O-RING, O-ring 17,12x2,62-S-NBR90
24	03002735	1	O-RING, O-ring 21,95x1,78-S-NBR90
25	03002831	1	O-RING, O-ring 6,07x1, 78-S-NBR90
26	03002872	3	O-RING, O-ring 9,25x1, 78-S-NBR90
41	03001783	2	PRESSURE LIMITER, Pressure valve MHDBN32K2-20/420VHN
42	03001791	1	PRESSURE LIMITER, Pressure valve A4VG125-ND
43	03001814	1	VALVE, PRESSURE RELIEF, Shut-off valve A4VG125
44	03001863	1	O-RING, O-ring 158,42x2,62-S-NBR90
52	03001486	1	COVER, FILTER, Filter housing A4VG71
53	03001638	1	SPRING, Spring F.FILTERA4VG71
54	03001500	1	FILTER, ELEMENT, Filter element 62.0125H20SL-JOO-0-V
55	03001654	1	O-RING, O-ring 78,97x3,53-S-FKM70

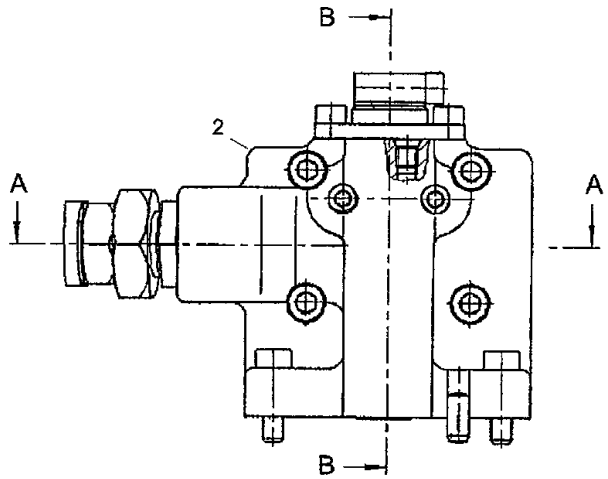

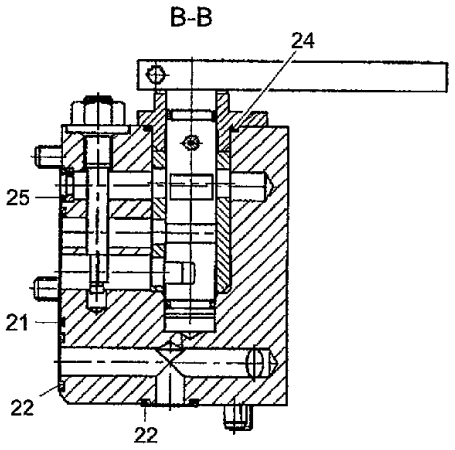

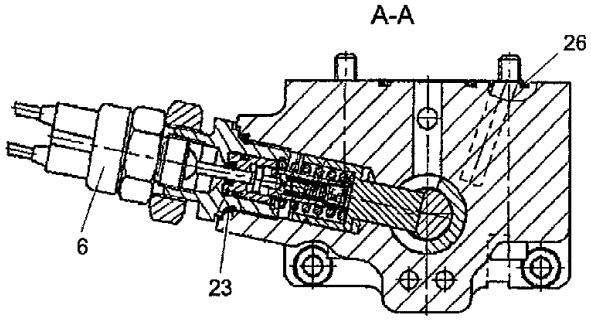

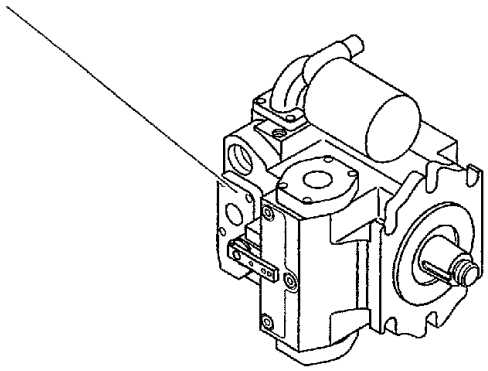

◀G020

CF80 CASE IH CROSS FLOW COMBINE

G021(02) HYDRAULIC SYSTEM- PUMP [2-A4VG125]

Ref	Part Number	Qty	Description
56	03001734	1	INDICATOR, Display FILTER-A4VG125

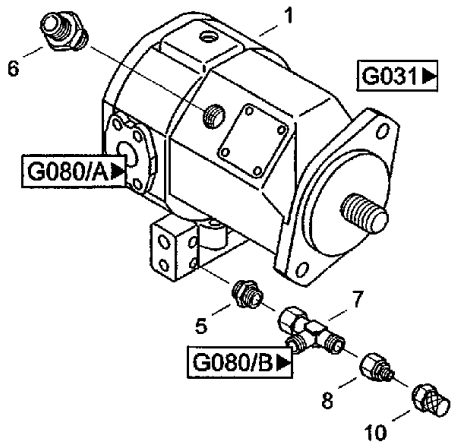

◀G013

CF80 CASE IH CROSS FLOW COMBINE

G030 HYDRAULIC SYSTEM- PUMP [1-A10VO45]

Ref	Part Number	Qty	Description
1	03001172	1	PUMP, Actuating pump A10V045DFR1/31L- PSC12K02
5	03434958	1	ADAPTER, Male connector GE10-LM-ED/OMD
6	03433932	1	ADAPTER, Male connector GE18-LM-ED/OMD
7	03402083	1	SCREW, Screw connection ET10-L/OMD
8	03435758	1	CONE, Adapter flow reduc. RED10/8-L/OMD
10	03435001	1	FITTING, Gauge connector VKA3/10-L

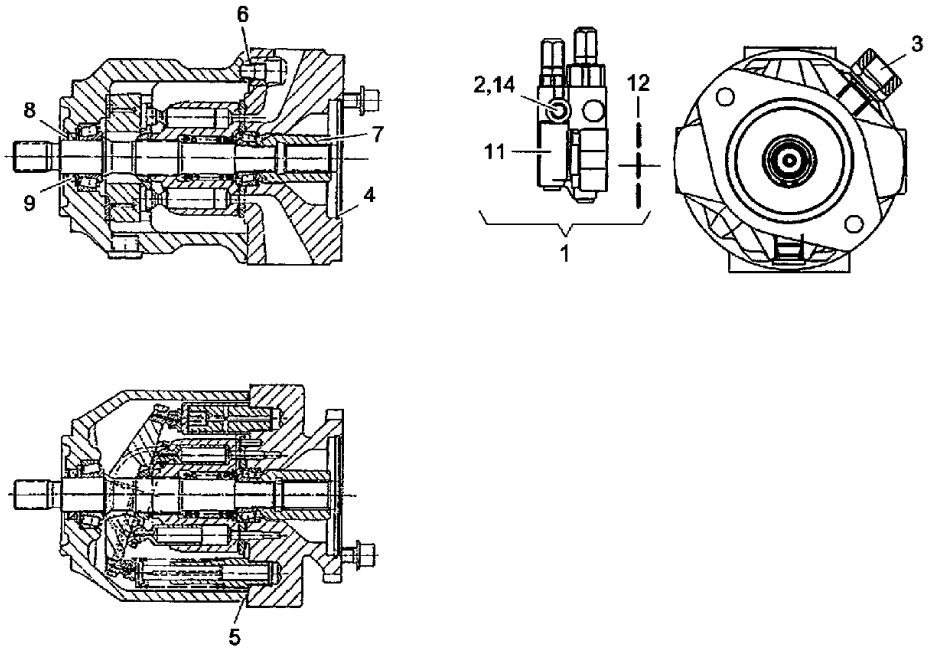

◄G030

CF80 CASE IH CROSS FLOW COMBINE

G031 HYDRAULIC SYSTEM- PUMP [2-A10VO45]

Ref	Part Number	Qty	Description
1	03001420	1	GOVERNOR, Controller A10VO
2	03002928	1	JUNCTION BOX, Adapter 7/16-20UNF2A/M14x1,5
3	03002930	1	JUNCTION BOX, Adapter 7/8-14UNF2B/M22x1,5
4	03002960	1	O-RING, O-ring 103X2-N-NBR80
5	03002977	1	O-RING, O-ring 167x2,5-N-NBR80
6	03003012	4	O-RING, O-ring 15x2-N-NBR80
7	03003061	1	HUB, Pinion A10V45/7/8Zoll
8	03003455	1	O-RING, Seeger circlip ring J40x1,75V
9	03003463	1	SEAL, SHAFT, Shaft seal BAB2SLO, 5-28x40x6
11	03003078	1	VALVE, CONTROL, Control valve DFR1
12	03003086	3	O-RING, O-ring 7,65x1 .78-NBR90PRP011
14	03003213	1	SET SCREW, Locking screw 7/16-20UNF2A-NBR

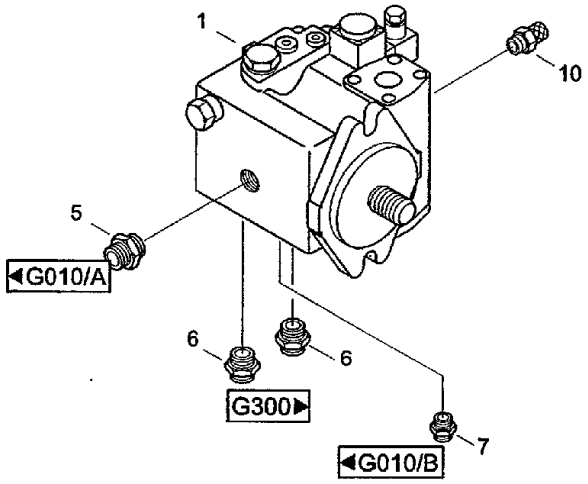

◀G013

CF80 CASE IH CROSS FLOW COMBINE

G040 HYDRAULIC SYSTEM- PUMP [1-A10VG18]

Ref	Part Number	Qty	Description
1	03001068	1	PUMP, HYDRAULIC, Actuating pump A10VG18NOO
5	03436035	1	ADAPTER, Male connector GE22-LM-ED/OMD
6	03437462	2	FITTING, Male connector GE20-SM-ED/OMD
7	03433024	1	ADAPTER, Male connector GE15-LM-ED/OMD
10	060522435	1	FITTING, Screwing EMA3/12x1,5-ED

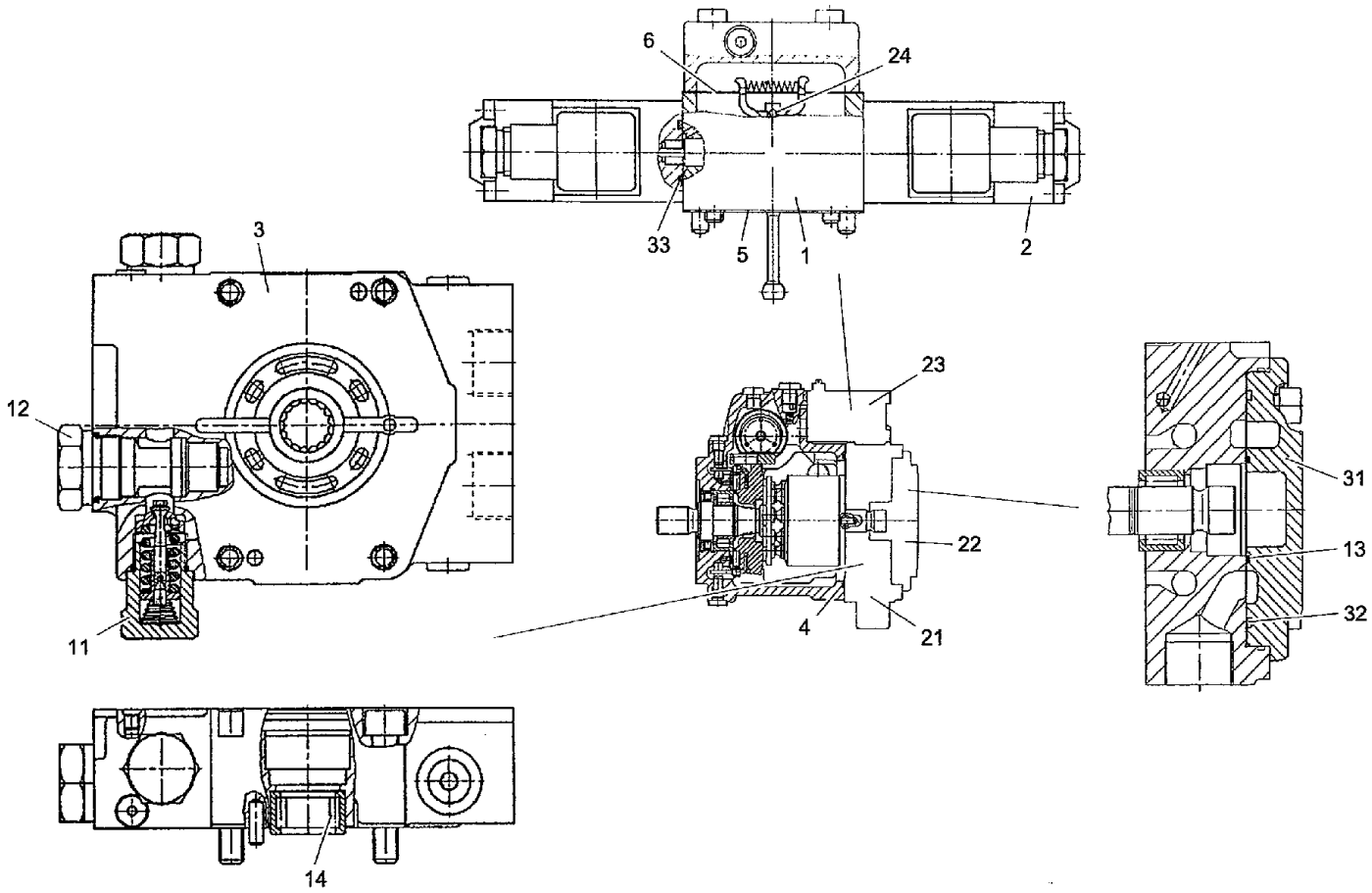

◀G040

CF80 CASE IH CROSS FLOW COMBINE

G041 HYDRAULIC SYSTEM- PUMP [2-A10VG18]

Ref	Part Number	Qty	Description
1	03001365	1	POPPET, VALVE, Control unit A10VG
2	03001357	2	SOLENOID, Prop magnet A10VG
3	03221454	1	PLATE, SPACER, Plate A10VG18
4	03001888	1	O-RING, O-ring 101,27x2,62-S-NBR70
5	03221463	1	GASKET, Seal A10VG-42622.0111
6	03221465	1	GASKET, Seal A10VG-42722.0120
11	03001404	2	VALVE, Valve HD-A10VG
12	03221453	1	LOCK, STOP, Lock kit A10VG18-ND1.6
13	03221459	1	O-RING, O-ring 34,65x1, 78-S-NBR90
14	03221455	1	BEARING, ROLLER, Cylindrical roller bearing A10VG18-RNU
21	03221452	1	PLATE, SPACER, Plate k, A10VG18
22	03221457	1	SUPPORT, Pump support A10VG18
23	03221461	1	CONTROL BLOCK, Control unit k, A10VG18
24	03221462	1	O-RING, O-ring 7,59x2,62-S-NBR90
31	03221460	1	COVER, Pump cover A10VG18
32	03221458	1	O-RING, O-ring 82,22x2,62-S-NBR70
33	03221466	2	O-RING, O-ring 1 8,77x1 .78-S-NBR90

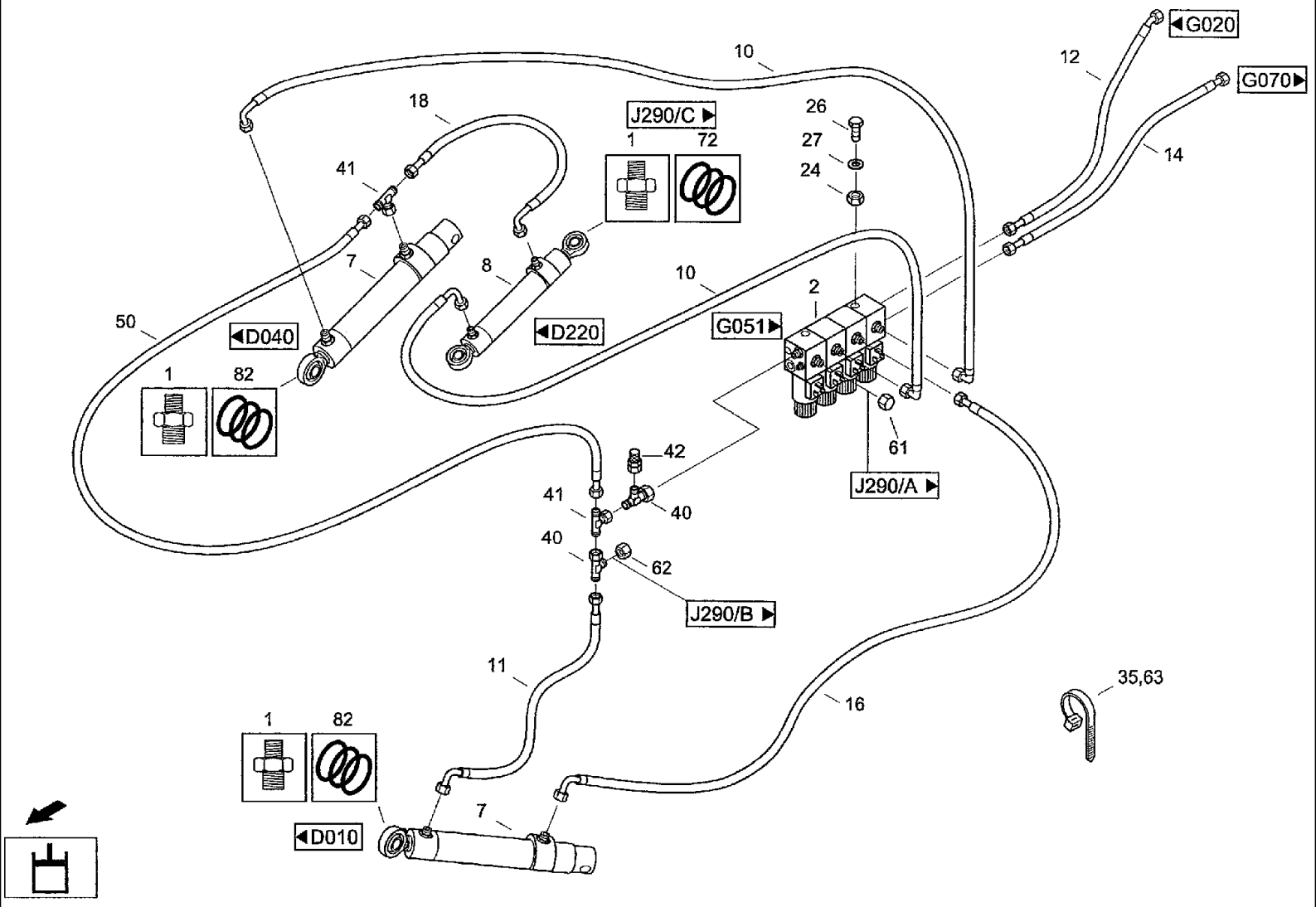
G020
G070
J290/C
J290/A
J290/B
G051
D040
D220
D010
10
12
18
26
27
24
14
41
7
8
10
2
50
1
82
42
61
41
40
40
62
11
16
35,63
1
82
7

CF80 CASE IH CROSS FLOW COMBINE

G050 HYDRAULIC SYSTEM- LOW-PRESSURE HYDRAULIC EQUIPMENT [1]

Ref	Part Number	Qty	Description
1	03437534	8	FITTING, Male connector GEO8-L/M14x1 ,5/OMD/ A3C
2	03128852	1	VALVE, CONTROL, Low-pressure valve 4x 088063.0
7	03128844	2	CYLINDER ASSY., Cylinder 55/45x160 089124.0
8	03129347	1	CYLINDER ASSY., Cylinder 40/30x125089155.0
10	06549457	2	HOSE, Hose line PHD106x1350AOL90 AOL90-270GR
11	06549465	1	HOSE, Hose line PHD106X1350AOLAOL90
12	060529546	1	HOSE, Hose line PHD 108x1000 AOLAOL45
14	06549836	1	HOSE, Hose line 1SN10DKOLDKOL08:10
16	06549811	1	HOSE, Hose line 1SN6DKOL90DKOL90
18	06545857	1	HOSE, Hose line 1SN6DKOLDKOL90-650
24	825-1406	2	NUT, M6, Cl 8,
26	614-6035	2	BOLT, Hex, M6 x 35, 8.8, Full Thd, Bolt, Hex, M6 x 35, 8.8, Full Thd, ISO4017
27	06577036	2	WASHER, SPECIAL, Locking washer M6
35	03791317	10	Cable band PLT-4I-30
40	03436357	2	FITTING, Right-angle screwing EL8-L/OMD
41	03435895	2	SCREW, Screw connection ET8-L/OMD
42	03436654	1	FITTING, Gauge connector VKA3/8-L
50	060524308	1	HOSE, Hose line PHD106x1200AOLAOL90
61	03435862	2	VANEUM GAUGE, Closing cone VKA8
62	03601186	2	NUT, TUBE, Tube connection nut M8-L/A3C
63	1309625	10	ANGLE, Cable band 188x4,8 PLT2S-MO
72	03129371	3	KIT, GASKET, Seal kit
82	03129388	1	KIT, GASKET, Seal kit

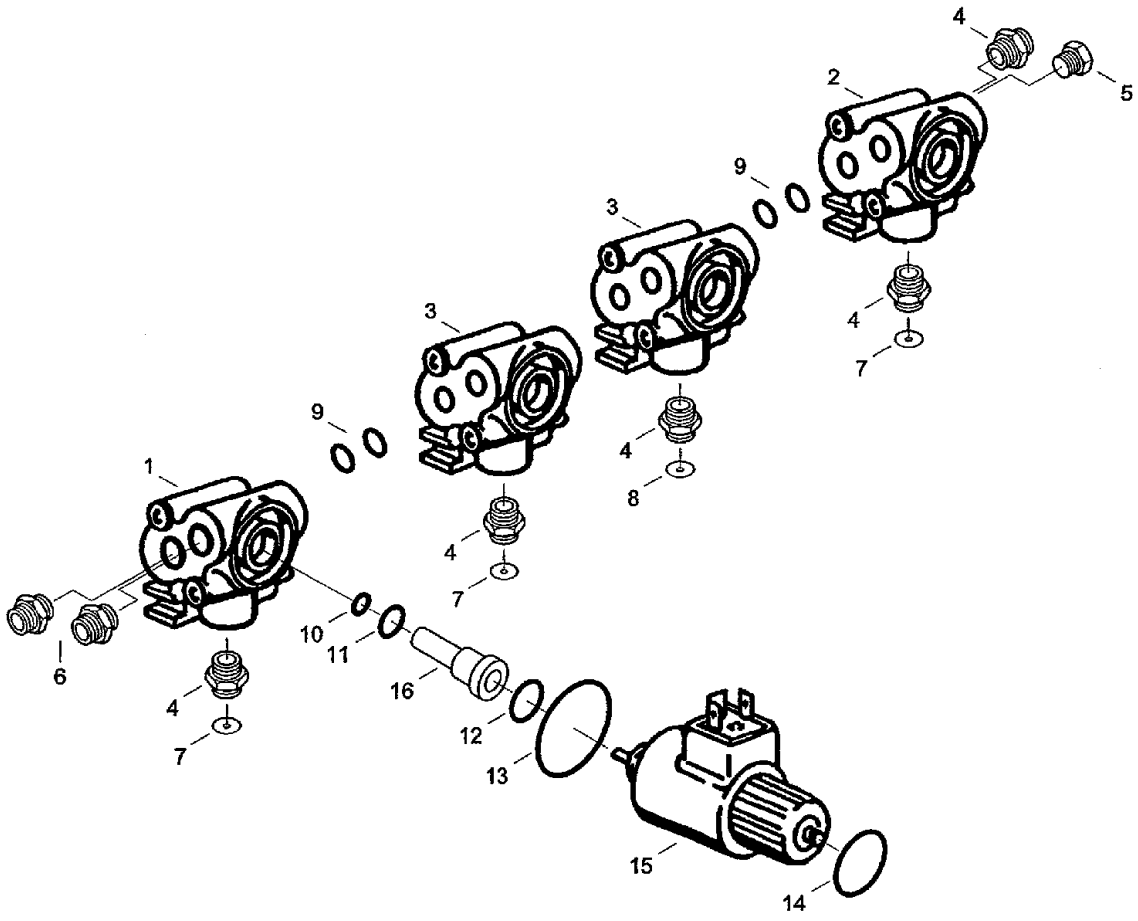

◀G050

CF80 CASE IH CROSS FLOW COMBINE

G051 HYDRAULIC SYSTEM- LOW- PRESSURE HYDRAULIC EQUIPMENT [2]

Ref	Part Number	Qty	Description
1	03129146	1	VALVE, CONTROL, ND entry block L/24V-VERSION
2	03129187	1	VALVE, CONTROL, ND entry block R/24V-VERSION
3	03129195	2	VALVE, CONTROL, ND intermediate block 24V-VERSION
4	03793987	5	Male connector GEO8-LM/OMD
5	03437567	1	FITTING, Locking screw VSTIM12x1,5-OR
6	03258564	2	FITTING, Male connector GEO10-L/M12x1,5/OMD/
7	060194685	3	ORIFICE, Restrictor 8-2
8	060055972	1	ORIFICE, Restrictor 8-7
9	03003326	6	O-RING, 0-ring 8,3x2,4-N DIN3771 NBR70
10	03003375	4	O-RING, 0-ring 6,07x1,78-N DIN3771 NBR70
11	03003447	4	O-RING, O-ring 10x1 ,5-N DIN3771 NBR70
12	01137277	4	O-RING, O-ring 13x2-NBR70 DIN3770
13	212570N0	4	O-RING, O-ring
14	218193N0	4	O-RING, O-ring
15	083320N2	4	SOLENOID, Solenoid
16	083315N0	4	FITTING, Valve insert 2,5-3,0

G070(01) HYDRAULIC SYSTEM- TRAVEL GEAR HYDRAULIC EQUIPMENT

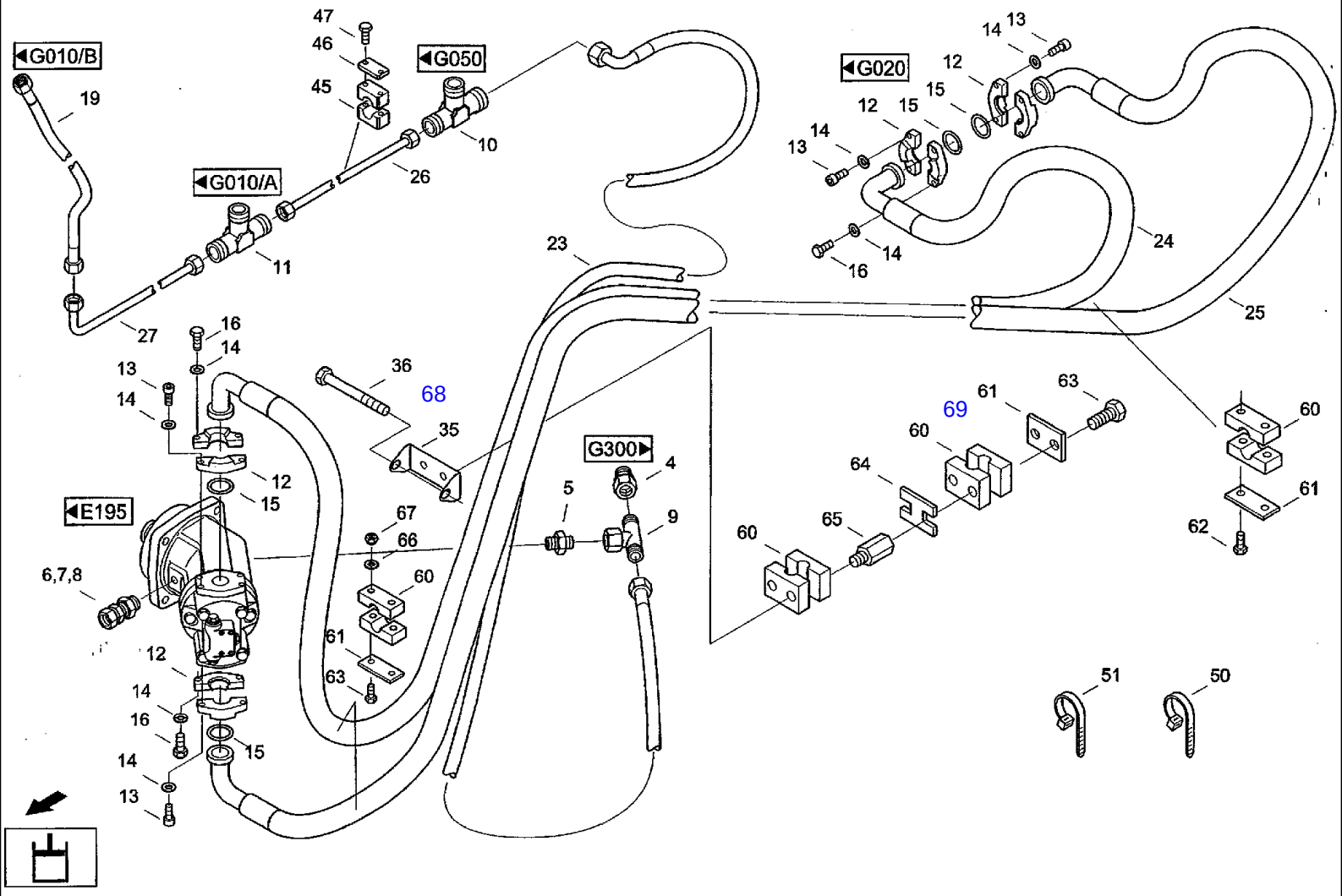

CF80 CASE IH CROSS FLOW COMBINE

G070(01) HYDRAULIC SYSTEM- TRAVEL GEAR HYDRAULIC EQUIPMENT

Ref	Part Number	Qty	Description
4	03435565	1	RESTRICTOR, Adapter flow reduc. RED18/08-L/OMD
5	03435774	1	ADAPTER, Male connector GE18-L/M18x1,5/OMD
6	03793497	1	Valve check RHZ15-LM-ED/OMD/
7	03793511	1	Closing cone VKA15
8	03793503	1	Tube connection nut M15-L
9	03435122	1	SCREW, Screw connection ET18-L/OMD/A3C
10	03433852	1	RESTRICTOR, Fitting XTR18/12/18-L
11	03435026	1	RESTRICTOR, Fitting XTR18/15/18-L
12	060518270	8	FLANGE ASSY, Half-flange SFH6 32
13	862-14050	12	SCREW, Hex Soc Hd, M14 x 50, 12.9, Cheese-head screw M14X50DIN91212.9
14	060519327	16	WASHER, LOCK, Spring washer B14-FST-A3CDIN127
15	060516445	4	GASKET, Seal 1 1/4"" PART-NO 4422000 HYTHAN
16	97106302	4	SCREW, Hex bolt M14X50ISO401710.9
19	06545865	1	HOSE, Hose line 1SN16CELDKOL-1100
23	06550042	1	HOSE, Hose line 1SN16DKOLDKOL45-4200
24	06550034	1	HOSE, Hose line PHD732x4950SF690 SF690
25	06545904	1	HOSE, Hose line PHD732x5100SF690-
26	02818684	1	TUBE ASSY., Cpl. pipe FH-L1
27	02818692	1	TUBE ASSY., Cpl. pipe FH-L2
35	31319002	1	SUPPORT, Support Fh-7 Г000-20.60.000 ОПОРА
36	06307057	2	SCREW, Hex bolt M10x160 ISO4014 10.9
45	06648156	2	SHIN, Clamping halves L-KP-2-R-18DIN3015PP Г000-20.00.206 КОРПУС ХОМУТА 218РР
46	06647540	2	COVER, Cover plate L-DP-2DIN3015W1 006646275 ПЛАСТИНА ПОКРОВНАЯ DP2
47	814-6035	4	BOLT, Hex, M6 x 35, 8.8, Bolt, Hex, M6 x 35, 8.8, ISO 4014
50	07070992	15	CABLE, Cable band 288x4,8 TSL-290-S

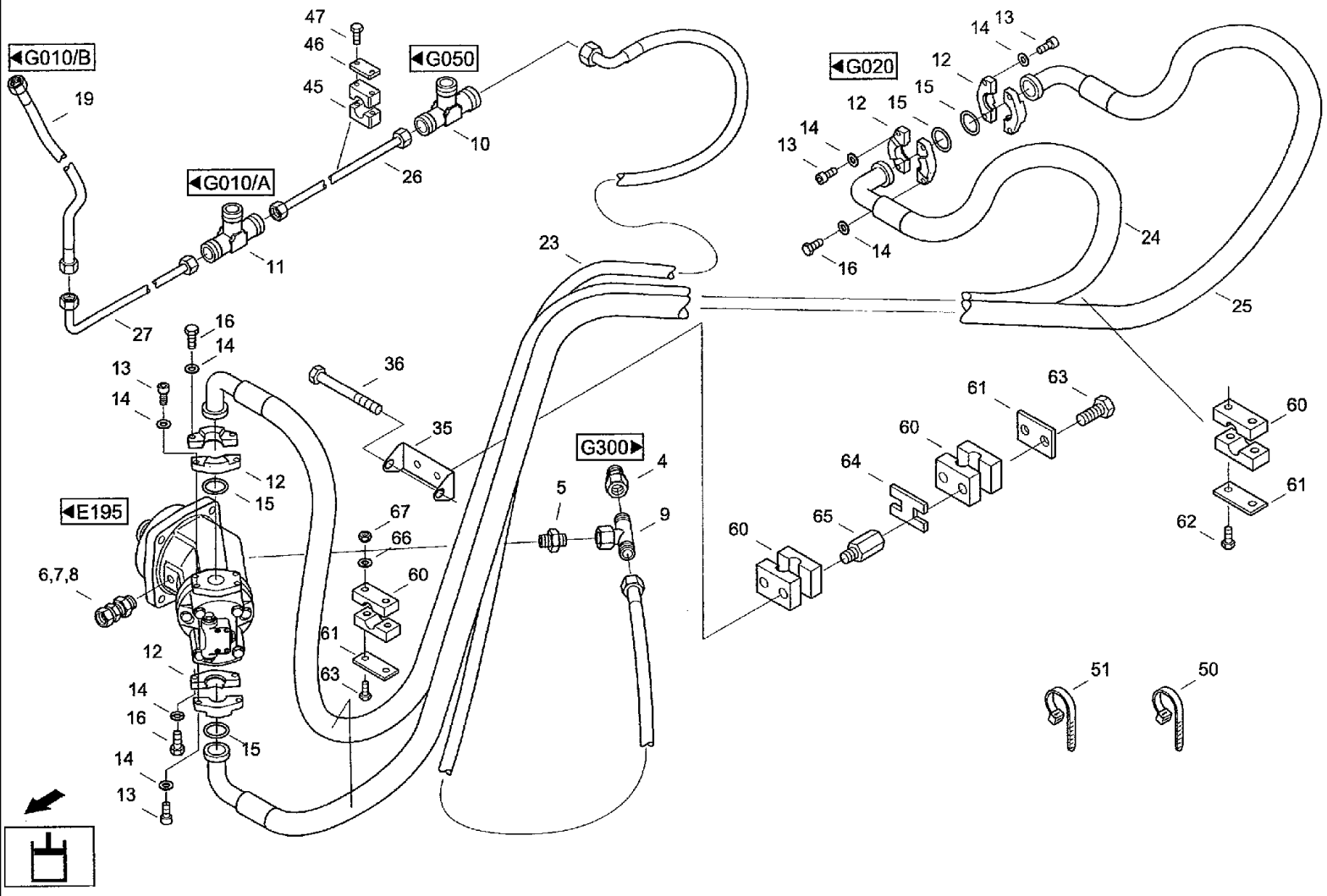
G010/B
G010/A
G050
G020
G300
E195
19
47
46
45
10
26
11
27
16
14
13
14
36
35
12
15
67
66
60
61
63
6,7,8
12
14
16
14
13
15
23
24
25
14
13
12
15
15
12
13
14
16
14
4
5
9
60
64
65
61
63
60
60
61
62
51
50

CF80 CASE IH CROSS FLOW COMBINE

G070(02) HYDRAULIC SYSTEM- TRAVEL GEAR HYDRAULIC EQUIPMENT

Ref	Part Number	Qty	Description
51	07074658	10	CABLE, Cable band 525x8,8TSL-530HD
60	06648332	6	FIXING BRACKET, Clamping halves S-KP-4-E-48.3 DIN3015 PP Г000-20.00.201 КОРПУС ХОМУТА
61	06648340	5	HOLDER, Cover plate S-DP-A-4DIN3015W1-ZN Г000-20.00.203 ПЛАСТИНА DPC4X
62	614-12100	6	BOLT, Hex, M12 x 100, 8.8, Full Thd, Hex bolt M12x100 ISO4017 8.8
63	814-12120	4	BOLT, Hex, M12 x 120, 8.8, Hex bolt M12x120ISO40148.8
64	06648373	1	PLATE, SPACER, Locking against pivoting S-VS-4DIN3015W1ZN Г000-20.00.204 ПЛАСТИНА SPC4X
65	06648381	2	SCREW, Screw S-AS-4DIN3015W1ZN Г000-20.00.205 ВИНТ ASC4X
66	06577060	4	WASHER, Locking washer B12
67	825-1412	4	NUT, M12, Cl 8, Hex nut M12 IS04032 8
68		1	Г000-20.00.010 ТРУБА
69		6	Г000-20.00.202 КОЛЬЦО (РЕЗИНОВОЕ)

G080(01) HYDRAULIC SYSTEM- WORKING HYDRAULICS [CF80K/CF80Q]

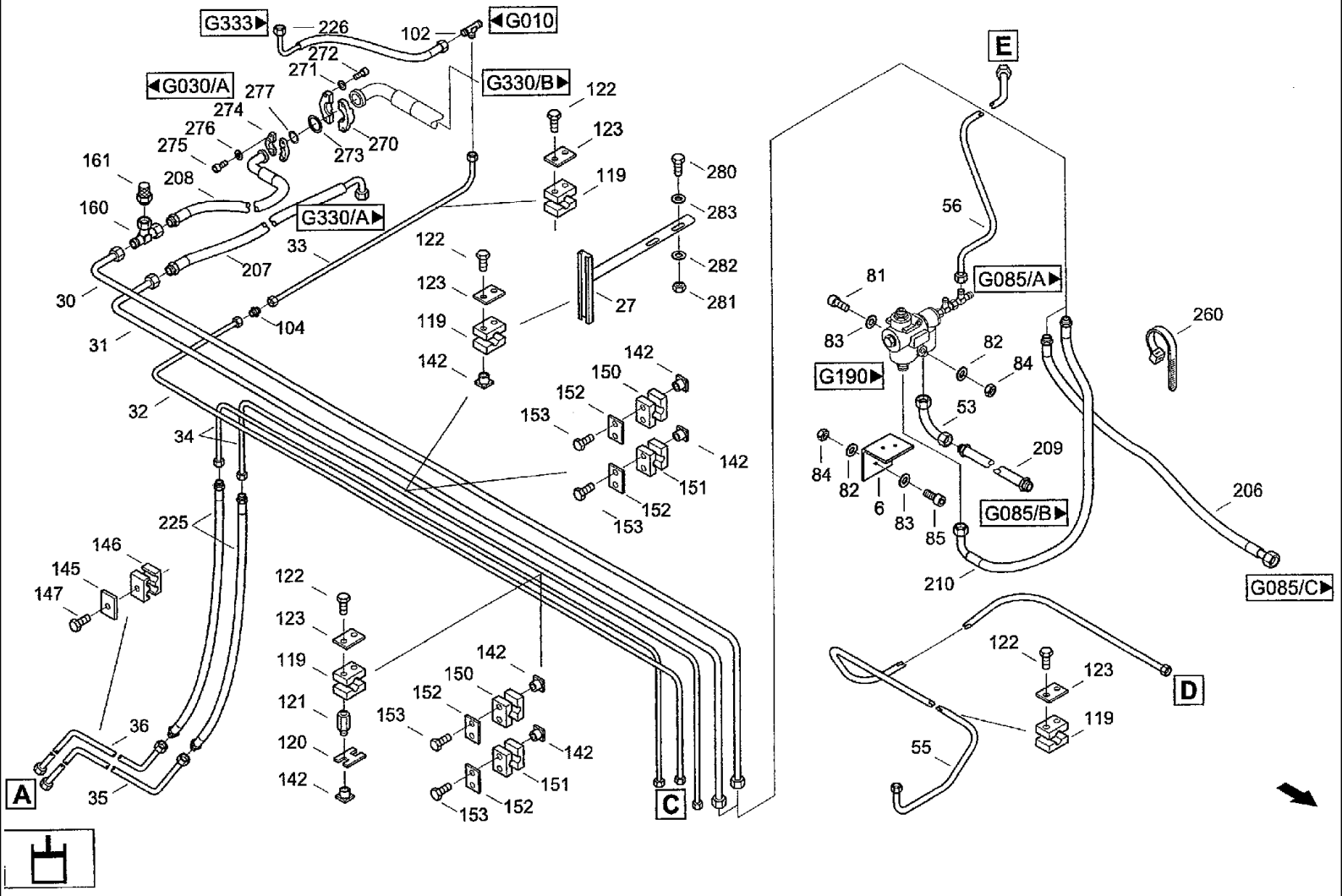

CF80 CASE IH CROSS FLOW COMBINE

G080(01) HYDRAULIC SYSTEM- WORKING HYDRAULICS [CF80K/CF80Q]

Ref	Part Number	Qty	Description
1	03129402	1	KIT, GASKET, Seal kit
2	03129427	1	KIT, GASKET, Seal kit
6	31344768	1	SUPPORT, Valve support
20	03129355	2	CYLINDER ASSY., Cylinder 60x505
21	03129242	1	CYLINDER ASSY., Cylinder 50/25x480ED 0891 34.0
25	03129363	1	POINTER, Pressure sensor 250 014208.0
26	31290296	1	SUPPORT, Support Ah-1
27	31290288	2	SUPPORT, Support AH-2
30	02818916	1	TUBE ASSY., Cpl. pipe P-AH-25
31	02818651	1	TUBE ASSY., Cpl. pipe T-AH
32	02818627	1	TUBE ASSY., Cpl. pipe LT1
33	02818635	1	TUBE ASSY., Cpl. pipe LT2
34	02818450	2	TUBE ASSY., Cpl. pipe LL1
35	02818467	1	TUBE ASSY., Cpl. pipe LL2
36	02818602	1	TUBE ASSY., Cpl. pipe LR2
37	02818610	2	TUBE ASSY., Cpl. pipe LV1
38	02818258	1	TUBE ASSY., Cpl. pipe SH-3
45	31318934	1	FITTING, Adapter M16-M14-OR
46	03436638	1	ADAPTER, Male connector GEO12-LM/OMD
47	060523485	1	UNION, Fitting GZ12-L
48	03432554	1	FITTING, Right-angle screwing EL12-L/OMD
53	31319010	1	ELBOW, Pipe bend 20-S
55	31318171	1	TUBE ASSY., Cpl. pipe SH-1
56	31344751	1	TUBE ASSY., Cpl. pipe LS-2
81	864-8070	2	SCREW, Hex Soc Hd, M8 x 70, 8.8, Cheese-head screw M8x70DIN9128.8

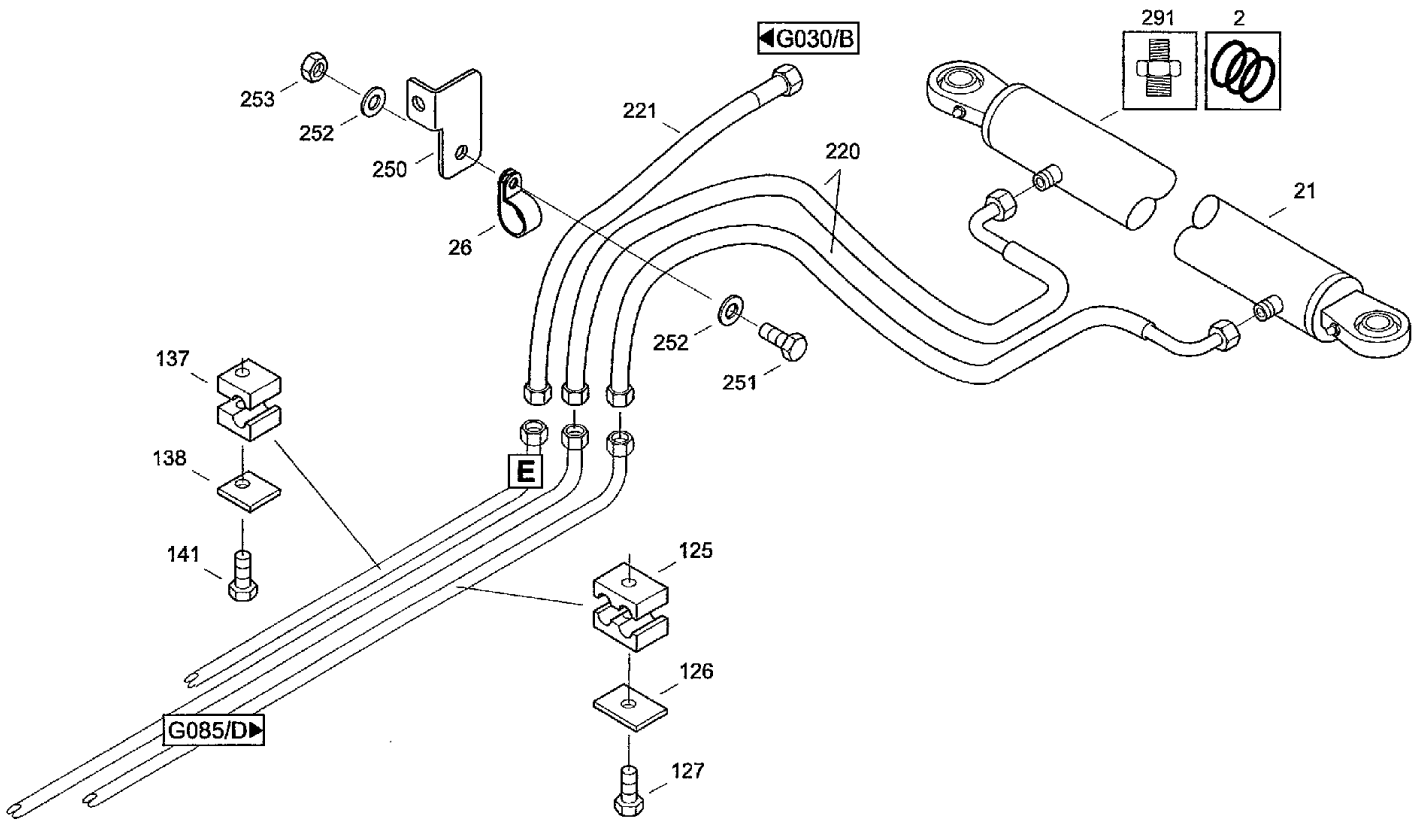
291
2
◀G030/B
253
252
250
221
220
21
26
252
251
137
138
141
E
125
126
127
G085/D▶

Ref	Part Number	Qty	Description
82	06577028	4	WASHER, SPECIAL, Locking washer M8
83	895-11008	4	WASHER, M8 x 16 x 1.6, Washer 8.4DIN125ST
84	825-1408	4	NUT, M8, Cl 8,
85	864-8025	2	SCREW, Hex Soc Hd, M8 x 25, 8.8, Cheese-head screw M8x25 DIN912 8.8
86	03432714	2	ADAPTER, Male connector GE12-LR-ED/OMD BEST-NR.
90	31290464	2	PIN, LARGE, Bolt 36x138
91	31290472	4	BUSHING, Spacer bushing
92	06404250	4	PIN, SPLIT (COTTER), Splint pin 8x63 DIN94 ST
101	060518213	1	UNION, Fitting xTR 15/1 2/1 2-L
102	03435026	1	RESTRICTOR, Fitting xTR 18/1 5/1 8-L
103	03435540	2	RESTRICTOR, Fitting xTR 15/1 0/1 0-L
104	060517550	1	UNION, Fitting xG 15-L/A3C
119	06647620	14	SHIN, Clamping halves L-KP-2-R-15DIN3015PP
120	06646201	5	Lock plate SIG2
121	06646154	10	Screw AF2
122	814-6035	20	BOLT, Hex, M6 x 35, 8.8, Bolt, Hex, M6 x 35, 8.8, ISO 4014
123	06646275	10	Cover plate DP2
125	06647813	3	SHIN, Clamping halves Z-KP-1-R-8-8DIN3015PP
126	06647524	3	COVER, Cover plate Z-DP-1 DIN3015W1
127	814-6035	3	BOLT, Hex, M6 x 35, 8.8, Bolt, Hex, M6 x 35, 8.8, ISO 4014
135	06645692	4	SHIN, Clamping halves L-KP-0-R-10DIN3015PP
136	06646363	2	SHIN, Clamping halves L-KP-0-R-12DIN3015PP
137	06645676	3	SHIN, Clamping halves L-KP-0-R-8DIN3015PP
138	06645684	7	COVER, Cover plate L-DP-ODIN3015W1
139	06646195	2	Lock plate SIG1

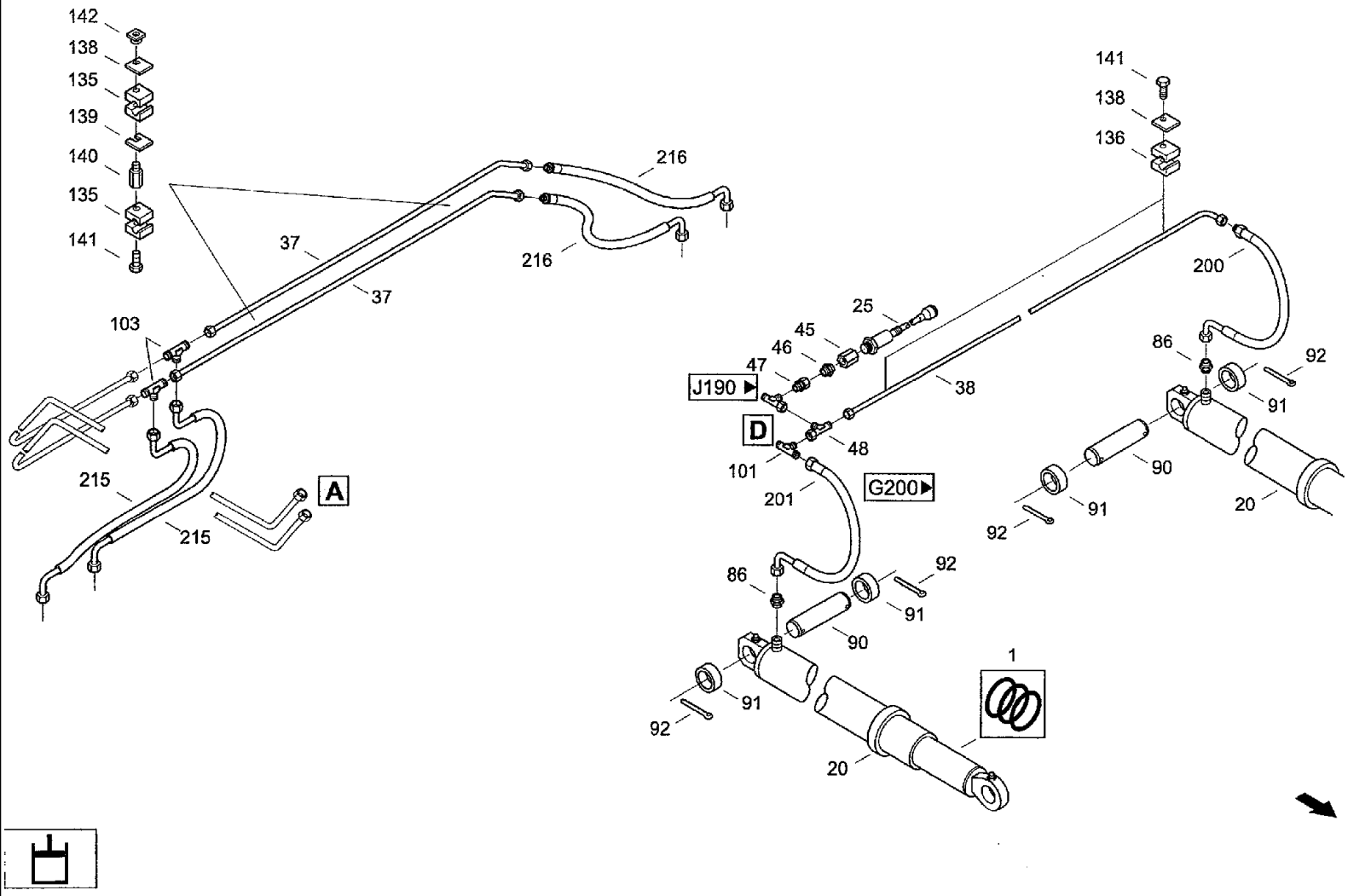
142
138
135
139
140
135
141
216
37
216
37
103
215
215
A
141
138
136
200
25
45
46
47
J190 ▶
D
48
38
101
201
G200 ▶
86
92
91
90
91
92
86
92
91
90
91
92
1
20
20

CF80 CASE IH CROSS FLOW COMBINE

G080(03) HYDRAULIC SYSTEM- WORKING HYDRAULICS [CF80K/CF80Q]

Ref	Part Number	Qty	Description
140	06646146	2	Screw AF1
141	814-6030	7	BOLT, Hex, M6 x 30, 8.8, Hex bolt M6x30ISO40148.8
142	06646138	28	Nut SM6
145	06647565	2	COVER, Cover plate Z-DP-2DIN3015W1
146	06647604	2	SHIN, Clamping halves Z-KP-2-R-15-15 DIN3015 PP
147	614-8035	2	BOLT, Hex, M8 x 35, 8.8, Hex bolt M8x35ISO40178.8
150	06647926	4	SHIN, Clamping halves L-KP-3-R-22DIN3015PP
151	06648365	4	SHIN, Clamping halves L-KP-3-R-25DIN3015PP
152	98039750	8	NO DESCRIPTION, Cover plate GR.III DP
153	614-6040	16	BOLT, Hex, M6 x 40, 8.8, Full Thd, Hex, M6 x 40, 8.8, Full Thd, ISO4017
160	03437382	1	RESTRICTOR, Fitting XTR25/16/25-S/OMD
161	03432650	1	FITTING, Gauge connector VKA3/16-S-PK
200	03793737	1	Hose line PHD210x800HLAOL90
201	060525438	1	HOSE, Hose line PHD210x750AOLAOL90
206	06550026	1	HOSE, Hose line 1SN20CELDKOL-1150
207	060529931	1	HOSE, Hose line PHD120x1600HLAOL90
208	06546087	1	HOSE, Hose line 4SP20DKOSSFL390-1 650
209	06545945	1	HOSE, Hose line 4SP16CESCES-450
210	31344792	1	HOSE, Hose line 4SP20 CES DKOS90-530
215	06549600	2	HOSE, Hose line PHD208x600AOL90AOL90
216	06549617	2	HOSE, Hose line PHD208x500HLAOL90
220	06549625	2	HOSE, Hose line PHD206x2300HLAOL90
221	06549633	1	HOSE, Hose line PHD206x4200HLAOL
225	06549666	2	HOSE, Hose line PHD213x1200HLHL
226	06545881	1	HOSE, Hose line 1SN16DKOL90DKOL90- 900

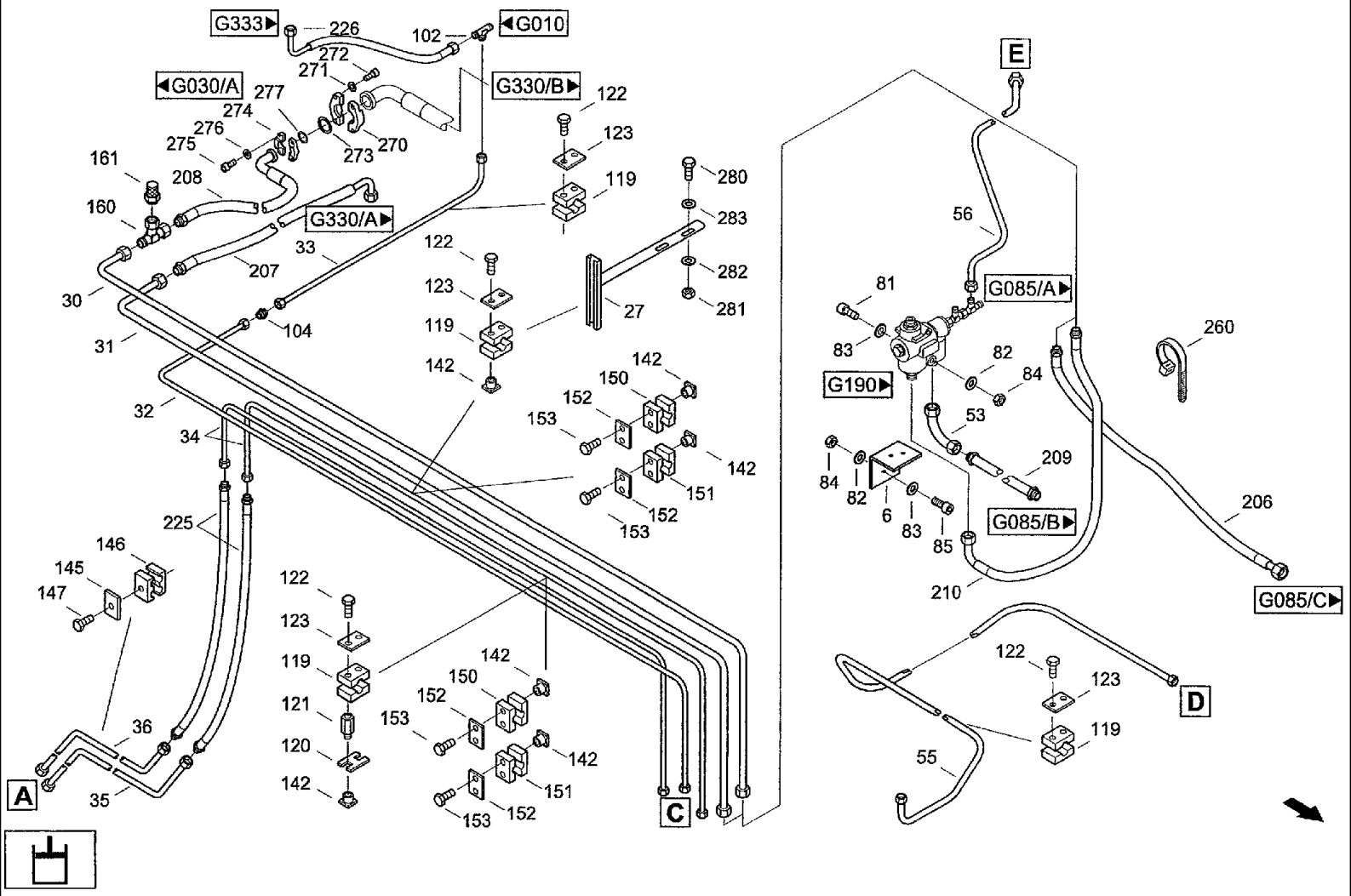
G333
226
102
G010
272
271
G030/A
277
G330/B
122
274
123
276
275
273
270
119
161
208
280
160
G330/A
283
56
33
122
207
123
282
81
G085/A
30
119
27
281
260
104
31
142
83
82
G190
142
150
84
32
152
53
153
34
142
209
84
82
6
83
85
G085/B
206
225
151
152
153
146
145
147
210
G085/C
122
123
119
121
120
142
150
152
153
142
151
152
153
122
123
119
55
D
36
35
A
C
E

CF80 CASE IH CROSS FLOW COMBINE

G080(04) HYDRAULIC SYSTEM- WORKING HYDRAULICS [CF80K/CF80Q]

Ref	Part Number	Qty	Description
250	02885508	1	CLAMP, Pipe clip D1-30x15W1-1 DIN3016
251	614-6020	1	BOLT, Hex, M6 x 20, 8.8, Hex bolt M6x20ISO40178.8
252	895-11006	2	WASHER, M6, Washer 6.4DIN125ST
253	825-1406	1	NUT, M6, Cl 8,
260	1309625	10	ANGLE, Cable band 1 88x4,8 PLT2S-MO
270	060529827	2	SHIN, Half-flange SFH40
271	864-12040	4	SCREW, Hex Soc Hd, M12 x 40, 8.8, Cheese-head screw M12x40 DIN912 8.8
272	892-11012	4	WASHER, LOCK, M12, Spring washer A12 DIN127 FST
273	060529835	1	BACK-UP RING, Seal 1 1/2ZOLL
274	060522900	2	FLANGE ASSY, Half-flange SFH25
275	962-10030	4	SCREW, Hex Soc Hd, M10 x 30, 10.9, Cheese-head screw M10x30DIN91210.9
276	892-11010	4	WASHER, LOCK, M10, Spring washer A10DIN127FST
277	060516437	1	GASKET, Seal 1ZOLL
280	614-10025	4	BOLT, Hex, M10 x 25, 8.8, Full Thd, Hex bolt M10x25ISO40178.8
281	825-1410	4	NUT, M10, Cl 8,
282	06577052	4	WASHER, SPECIAL, Locking washer B10
291	03437534	2	FITTING, Male connector GEO8-L/M14x1 ,5/OMD/ A3C
283	895-11010	4	WASHER, M10 x 20 x 2, Washer 10.5DIN125ST

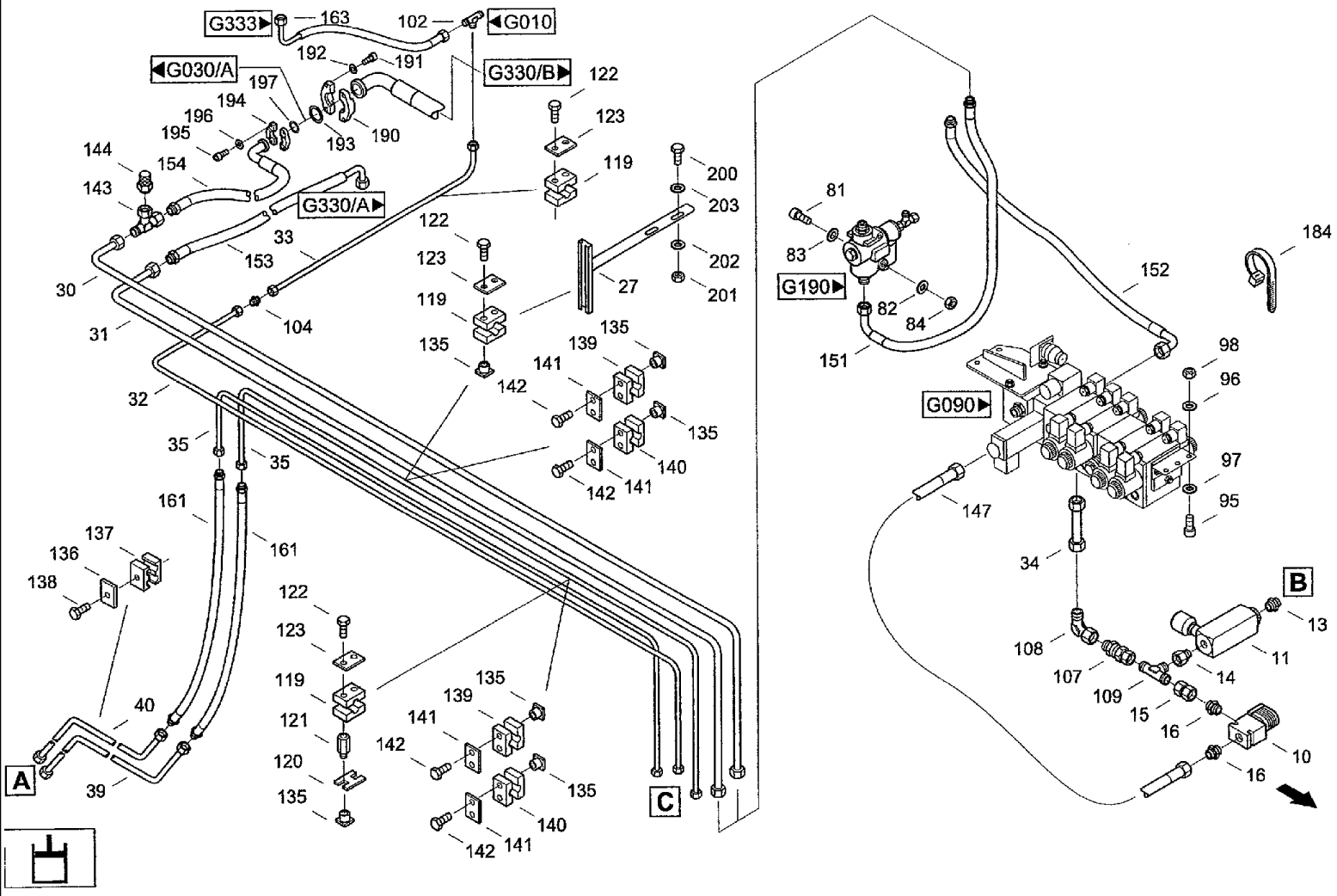
G333
163
102
G010
G030/A
192
191
G330/B
122
197
194
196
195
193
190
123
144
154
143
G330/A
119
200
203
81
33
153
122
123
119
27
202
201
83
G190
82
84
184
152
30
104
135
139
135
141
142
98
96
31
151
G090
32
135
140
142
141
97
95
35
35
147
161
161
137
136
138
34
B
122
123
119
121
120
135
135
139
141
142
135
140
142
141
108
107
109
15
16
14
11
13
10
16
40
39
A
C

CF80 CASE IH CROSS FLOW COMBINE

G080(05) HYDRAULIC SYSTEM- WORKING HYDRAULICS [CF80P]

Ref	Part Number	Qty	Description
1	03129402	1	KIT, GASKET, Seal kit
2	03129427	1	KIT, GASKET, Seal kit
8	03211872	1	COUPLING, QUICK, MALE, Clutch FH
10	072052267	1	VALVE, Check valve 508-3 B
11	061068010	1	VALVE, Flow control valve SRVR 12
13	03434218	1	ADAPTER, Male connector GE15-LR-ED/OMD
14	060531813	1	FITTING, Male connector EGE15-LR-ED/OMD/
15	060523508	1	UNION, Fitting GZ15-L
16	03433467	2	ADAPTER, Male connector GE15-L/R3/8-ED/OMD/
20	061067870	2	CYLINDER ASSY., Cylinder 60x465
21	03129242	1	CYLINDER ASSY., Cylinder 50/25x480ED 0891 34.0
26	31290296	1	SUPPORT, Support Ah-1
27	31290288	2	SUPPORT, Support AH-2
30	02818916	1	TUBE ASSY., Cpl. pipe P-AH-25
31	02818651	1	TUBE ASSY., Cpl. pipe T-AH
32	02818627	1	TUBE ASSY., Cpl. pipe LT1
33	02818635	1	TUBE ASSY., Cpl. pipe LT2
34	02818274	1	TUBE ASSY., Cpl. pipe SH-5
35	02818450	2	TUBE ASSY., Cpl. pipe LL1
36	02818282	1	TUBE ASSY., Cpl. pipe AH-P
37	31344735	1	TUBE ASSY., Cpl. pipe SH-M
39	02818467	1	TUBE ASSY., Cpl. pipe LL2
40	02818602	1	TUBE ASSY., Cpl. pipe LR2
41	02818610	2	TUBE ASSY., Cpl. pipe LV1
42	02818258	1	TUBE ASSY., Cpl. pipe SH-3

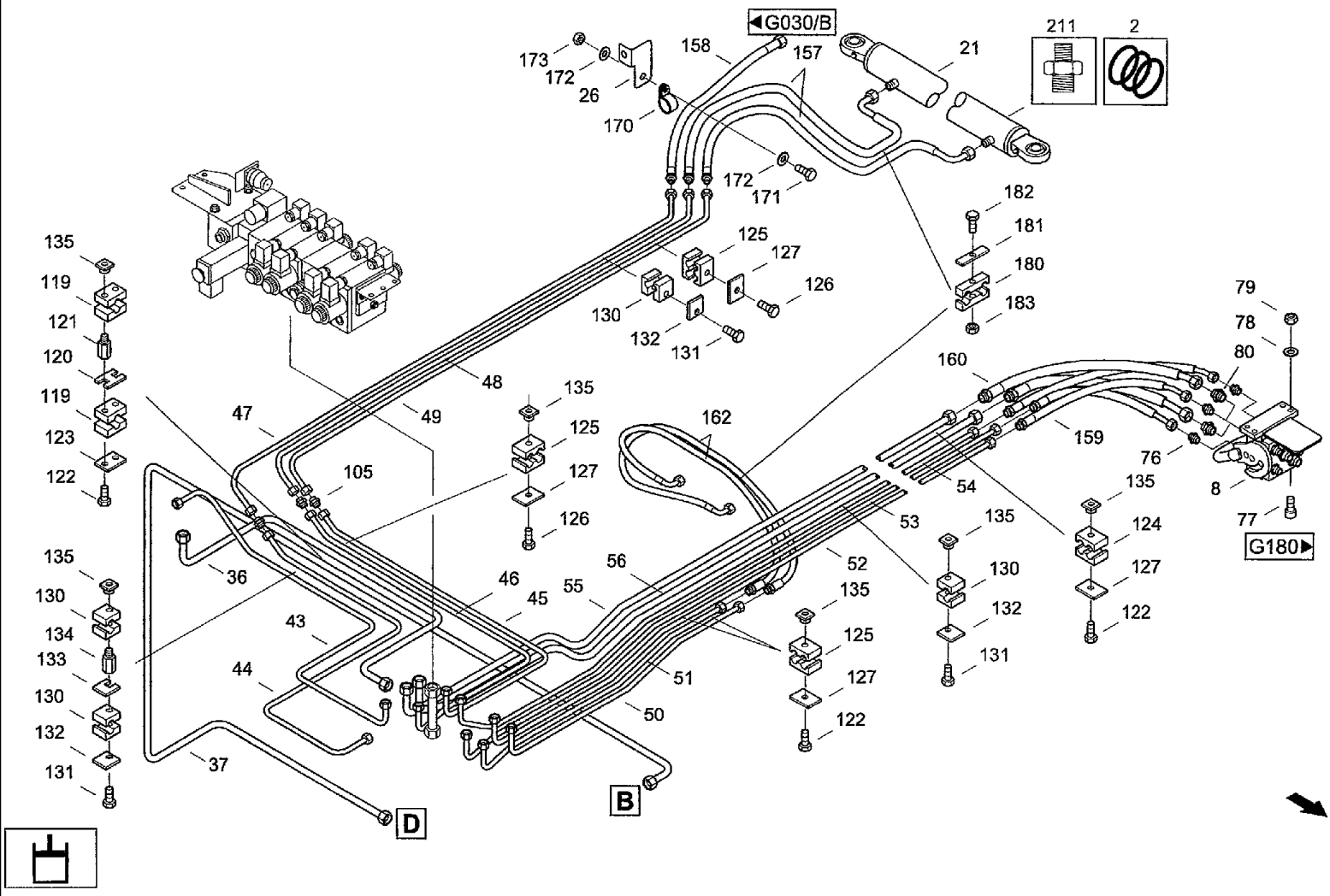
◀G030/B
211
2
173
172
26
158
157
21
170
172
171
182
181
180
183
125
127
126
130
132
131
135
119
121
120
119
123
122
48
49
47
105
135
125
127
126
162
160
159
79
78
80
76
8
77
G180▶
54
53
52
135
124
127
122
135
130
132
131
135
125
127
122
135
130
134
133
130
132
131
36
46
45
55
56
43
44
51
50
37
D
B

CF80 CASE IH CROSS FLOW COMBINE

G080(06) HYDRAULIC SYSTEM- WORKING HYDRAULICS [CF80P]

Ref	Part Number	Qty	Description
43	02818290	1	TUBE ASSY., Cpl. pipe LS-L
44	02818305	1	TUBE ASSY., Cpl. pipe LS-AH1
45	02818387	1	TUBE ASSY., Cpl. pipe AZ-B1
46	02818362	1	TUBE ASSY., Cpl. pipe AZ-A1
47	02818313	1	TUBE ASSY., Cpl. pipe LS-AH2
48	02818370	1	TUBE ASSY., Cpl. pipe AZ-A2
49	02818395	1	TUBE ASSY., Cpl. pipe AZ-B2
50	02818161	1	TUBE ASSY., Cpl. pipe SV-B
51	02818153	1	TUBE ASSY., Cpl. pipe SV-A
52	02818186	1	TUBE ASSY., Cpl. pipe HH-B
53	02818178	1	TUBE ASSY., Cpl. pipe HH-A
54	02818194	1	TUBE ASSY., Cpl. pipe HV
55	02818225	1	TUBE ASSY., Cpl. pipe HA-B
56	02818217	1	TUBE ASSY., Cpl. pipe HA-A
76	03432722	3	ADAPTER, Male connector GE8-L/R3/8-ED/OMD
77	864-8020	4	SCREW, Hex Soc Hd, M8 x 20, 8.8, Cheese-head screw M8X20DIN9128.8
78	06577028	4	WASHER, SPECIAL, Locking washer M8
79	825-1408	4	NUT, M8, Cl 8,
80	03436010	2	RESTRICTOR, Adapter flow reduc. RED15/12-L/OMD
81	864-8070	2	SCREW, Hex Soc Hd, M8 x 70, 8.8, Cheese-head screw M8X70DIN9128.8
82	06577028	2	WASHER, SPECIAL, Locking washer M8
83	895-11008	2	WASHER, M8 x 16 x 1.6, Washer 8.4DIN125ST
84	825-1408	2	NUT, M8, Cl 8,
86	03432714	2	ADAPTER, Male connector GE12-LR-ED/OMD BEST-NR.
90	31290464	2	PIN, LARGE, Bolt 36x138

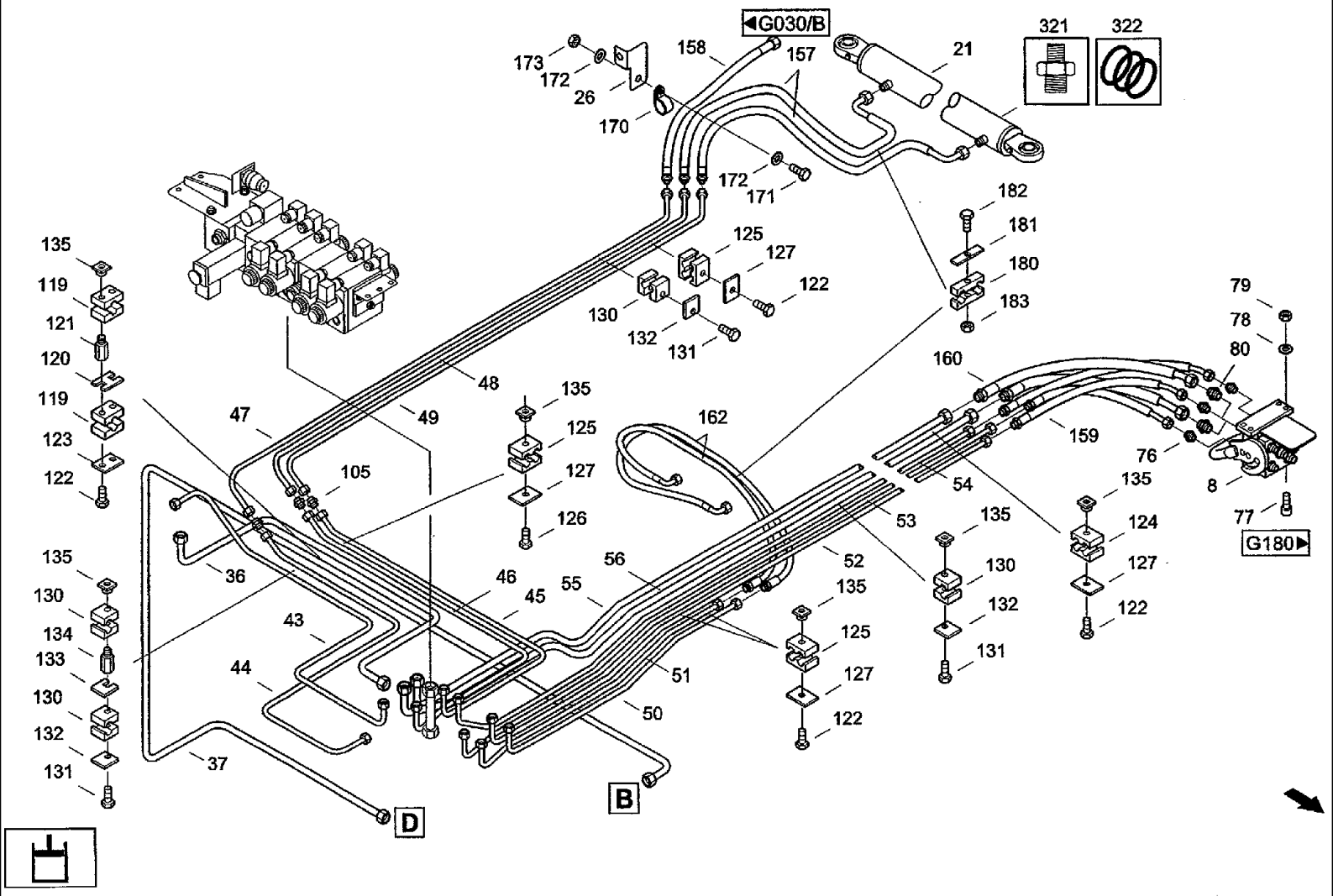
G030/B
321
322
173
172
26
170
158
157
21
172
171
182
181
180
183
125
127
122
130
132
131
135
119
121
120
119
123
122
48
49
47
105
135
125
127
126
162
160
159
79
78
80
76
8
77
G180
54
53
52
135
124
127
122
135
130
132
131
135
125
127
122
56
55
46
45
43
44
51
50
36
37
135
130
134
133
130
132
131
D
B

Ref	Part Number	Qty	Description
91	31290472	4	BUSHING, Spacer bushing
92	06404250	4	PIN, SPLIT (COTTER), Splint pin 8x63 DIN94 ST
95	864-8020	4	SCREW, Hex Soc Hd, M8 x 20, 8.8, Cheese-head screw M8x20DIN9128.8
96	06577028	4	WASHER, SPECIAL, Locking washer M8
97	895-11008	4	WASHER, M8 x 16 x 1.6, Washer 8.4DIN125ST
98	825-1408	4	NUT, M8, Cl 8,
101	060518213	1	UNION, Fitting xTR 15/1 2/1 2-L
102	03435026	1	RESTRICTOR, Fitting XTR18/15/18-L
103	03435540	2	RESTRICTOR, Fitting XTR15/10/10-L
104	060517550	1	UNION, Fitting xG 15-L/A3C
105	03605792	3	UNION, Fitting xG 8-L/A3C
107	060524084	1	VALVE, CHECK, Valve check RHD15-L/OMD
108	03433547	1	FITTING, Threaded elbow joint EW15-L/OMD
109	03434515	1	FITTING, Right-angle screwing EL15-L/OMD
119	06647620	15	SHIN, Clamping halves L-KP-2-R-15DIN3015PP
120	06646201	5	Lock plate SIG2
121	06646154	12	Screw AF2
122	814-6035	20	BOLT, Hex, M6 x 35, 8.8, Bolt, Hex, M6 x 35, 8.8, ISO 4014
123	06646275	10	Cover plate DP2
124	06647508	3	SHIN, Clamping halves Z-KP-1-R-12-12 DIN3015 PP
125	06647813	8	SHIN, Clamping halves Z-KP-1-R-8-8DIN3015PP
126	814-6035	11	BOLT, Hex, M6 x 35, 8.8, Bolt, Hex, M6 x 35, 8.8, ISO 4014
127	06647524	11	COVER, Cover plate Z-DP-1 DIN3015W1
128	06645692	4	SHIN, Clamping halves L-KP-0-R-10DIN3015PP
129	06646363	2	SHIN, Clamping halves L-KP-0-R-12DIN3015PP

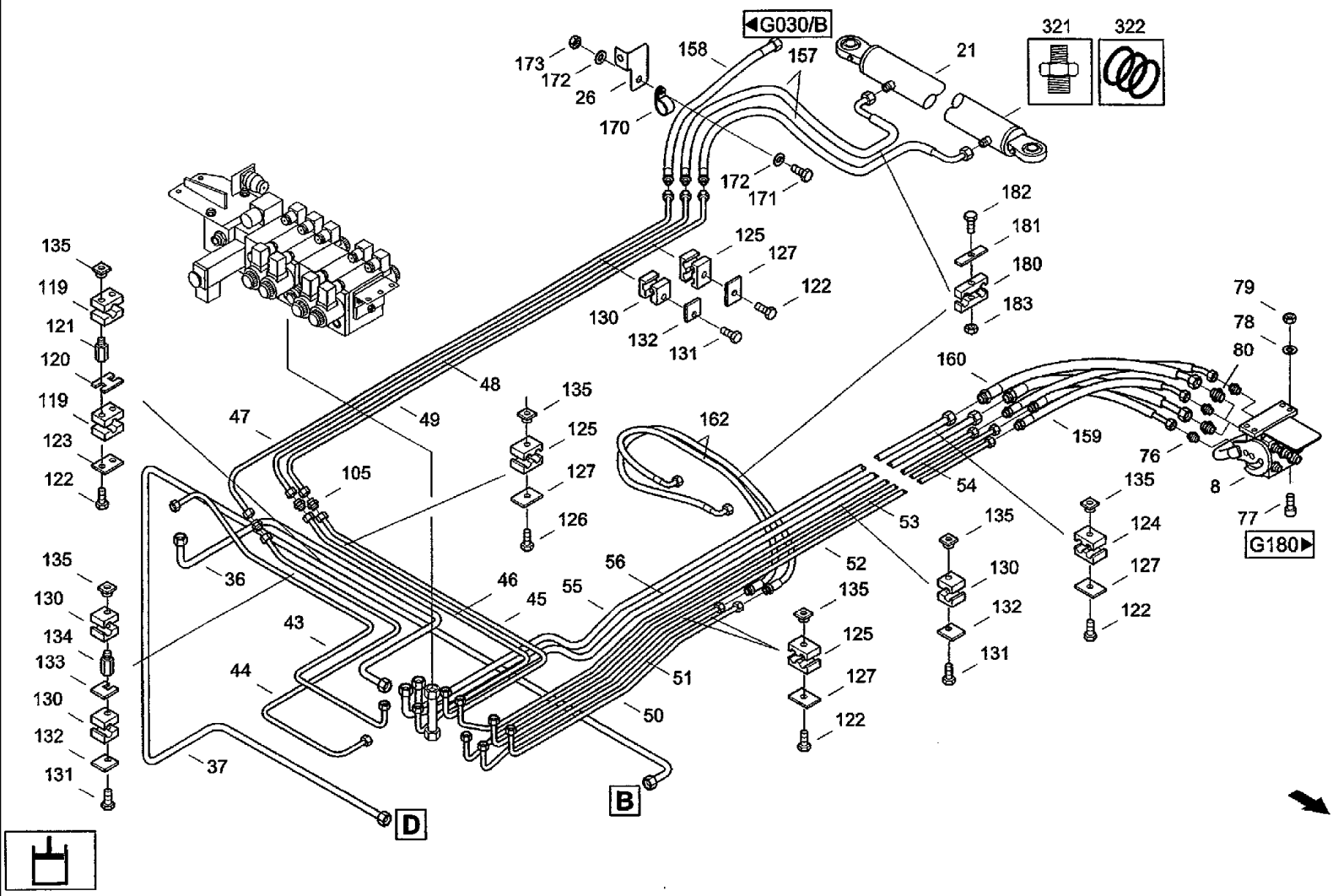
G030/B
321
322
173
172
26
170
158
157
21
172
171
182
181
180
183
125
127
122
130
132
131
135
119
121
120
119
123
122
48
49
47
105
135
125
127
126
162
160
159
79
78
80
76
8
77
G180
54
53
52
135
124
127
122
135
130
132
131
135
125
127
122
56
55
46
45
43
44
51
50
36
37
135
130
134
133
130
132
131
D
B

CF80 CASE IH CROSS FLOW COMBINE

G080(08) HYDRAULIC SYSTEM- WORKING HYDRAULICS [CF80P]

Ref	Part Number	Qty	Description
130	06645676	8	SHIN, Clamping halves L-KP-O-R-8 DIN3015 PP
131	814-6030	11	BOLT, Hex, M6 x 30, 8.8, Hex bolt M6X30 IS04014 8.8
132	06645684	11	COVER, Cover plate L-DP-ODIN3015W1
133	06646195	3	Lock plate SIG1
134	06646146	3	Screw AF1
135	06646138	40	Nut SM6
136	06647565	2	COVER, Cover plate Z-DP-2DIN3015W1
137	06647604	2	SHIN, Clamping halves Z-KP-2-R-15-15 DIN3015 PP
138	614-8035	2	BOLT, Hex, M8 x 35, 8.8, Hex bolt M8x35 ISO4017 8.8
139	06647926	4	SHIN, Clamping halves L-KP-3-R-22 DIN3015 PP
140	06648365	4	SHIN, Clamping halves L-KP-3-R-25 DIN3015 PP
141	98039750	8	NO DESCRIPTION, Cover plate GR.III DP
142	614-6040	16	BOLT, Hex, M6 x 40, 8.8, Full Thd, Hex, M6 x 40, 8.8, Full Thd, ISO4017
143	03437382	1	RESTRICTOR, Fitting XTR25/16/25-S/OMD
144	03432650	1	FITTING, Gauge connector VKA3/16-S-PK
145	03793737	1	Hose line PHD210X800HLAOL90
146	060525438	1	HOSE, Hose line PHD210x750AOLAOL90
147	06541402	1	HOSE, Hose line 1SN12DKOLDKOL600
151	06546070	1	HOSE, Hose line 4SP20CESDKOS90-950
152	06549578	1	HOSE, Hose line PHD120x1050HLAOL90
153	060529931	1	HOSE, Hose line PHD120x1600HLAOL90
154	06546087	1	HOSE, Hose line 4SP20DKOSSFL390-1 650
155	06549600	2	HOSE, Hose line PHD208x600AOL90AOL90
156	06549617	2	HOSE, Hose line PHD208X500HLAOL90
157	06549625	2	HOSE, Hose line PHD206X2300HLAOL90

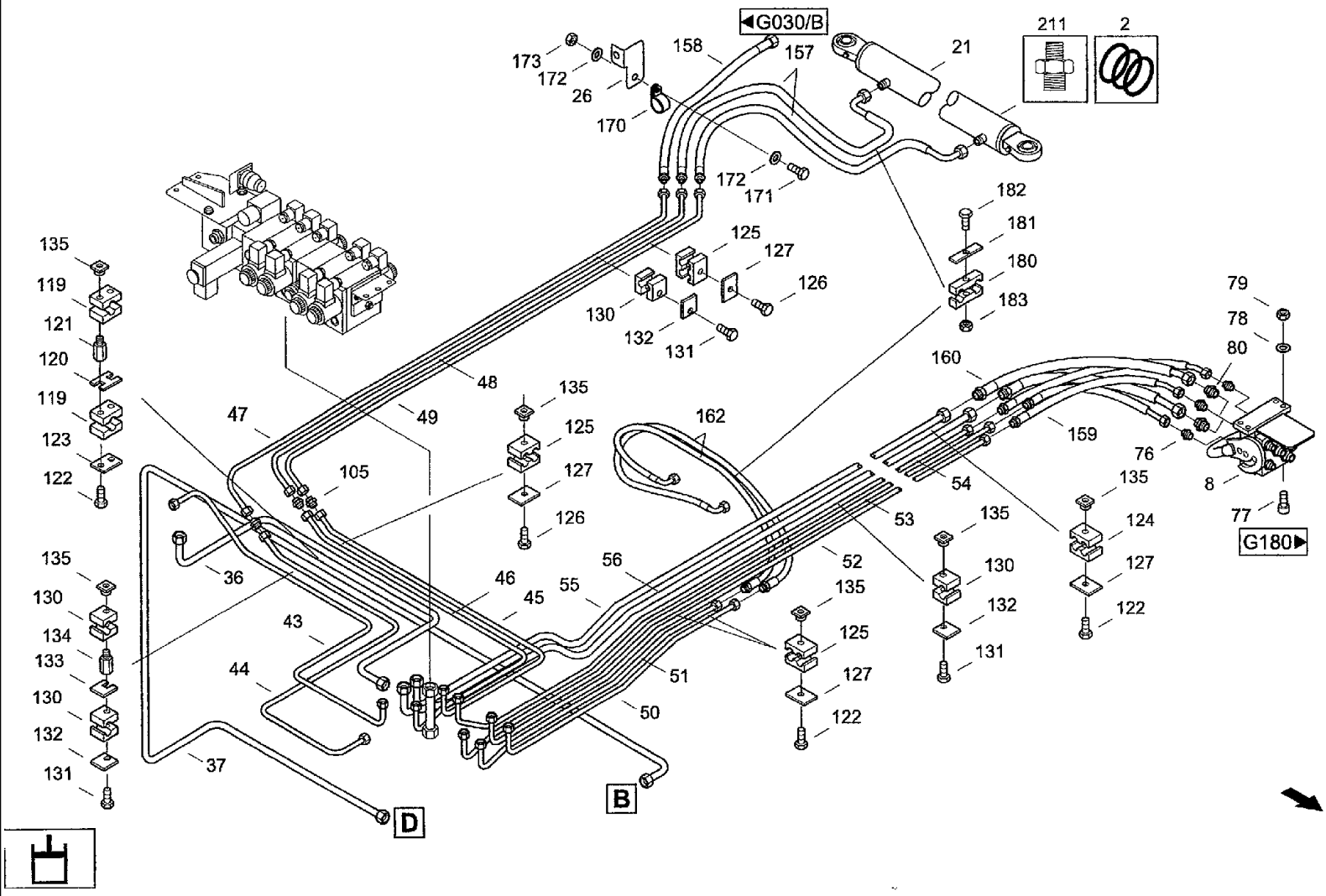
◀G030/B
211
2
173
172
26
158
157
21
170
172
171
182
181
180
183
125
127
126
130
132
131
135
119
121
120
119
123
122
48
49
47
105
135
125
127
126
162
160
159
79
78
80
76
8
77
G180▶
54
53
52
135
130
132
131
135
124
127
122
56
55
46
45
43
44
51
50
135
125
127
122
135
130
134
133
130
132
131
36
37
D
B

CF80 CASE IH CROSS FLOW COMBINE

G080(09) HYDRAULIC SYSTEM- WORKING HYDRAULICS [CF80P]

Ref	Part Number	Qty	Description
158	06549633	1	HOSE, Hose line PHD206X4200HLAOL
159	06549641	3	HOSE, Hose line PHD206x700HLAOL45
160	06549658	2	HOSE, Hose line PHD210x700HLAOL45
161	06549666	2	HOSE, Hose line PHD213x1200HLHL
162	060525421	2	HOSE, Hose line PHD206x1100HLAOL90
163	06545881	1	HOSE, Hose line 1SN16DKOL90DKOL90- 900
170	02885508	1	CLAMP, Pipe clip D1-30x15W1-1 DIN3016
171	614-6020	1	BOLT, Hex, M6 x 20, 8.8, Hex bolt M6x20ISO40178.8
172	895-11006	2	WASHER, M6, Washer 6,4 DIN125 ST
173	825-1406	1	NUT, M6, Cl 8,
180	060504788	2	CLAMP, Duoble attaching clip LNG3 14/14 PA
181	060505387	4	COVER, Cover plate DPL3
182	814-6035	2	BOLT, Hex, M6 x 35, 8.8, Bolt, Hex, M6 x 35, 8.8, ISO 4014
183	825-1406	2	NUT, M6, Cl 8,
184	1309625	10	ANGLE, Cable band 1 88x4,8 PLT2S-MO
190	060529827	2	SHIN, Half-flange SFH40
191	864-10040	4	SCREW, Hex Soc Hd, M10 x 40, 8.8, Cheese-head screw M10x40DIN9128.8
192	892-11012	4	WASHER, LOCK, M12, Spring washer A12 DIN127 FST
193	060529835	1	BACK-UP RING, Seal 1 1/2ZOLL
194	060522900	2	FLANGE ASSY, Half-flange SFH25
195	962-10030	4	SCREW, Hex Soc Hd, M10 x 30, 10.9, Cheese-head screw M10x30DIN91210.9
196	892-11010	4	WASHER, LOCK, M10, Spring washer A10 DIN127 FST
197	060516437	1	GASKET, Seal 1ZOLL
200	614-10025	4	BOLT, Hex, M10 x 25, 8.8, Full Thd, Hex bolt M10x25ISO40178.8
201	825-1410	4	NUT, M10, Cl 8,

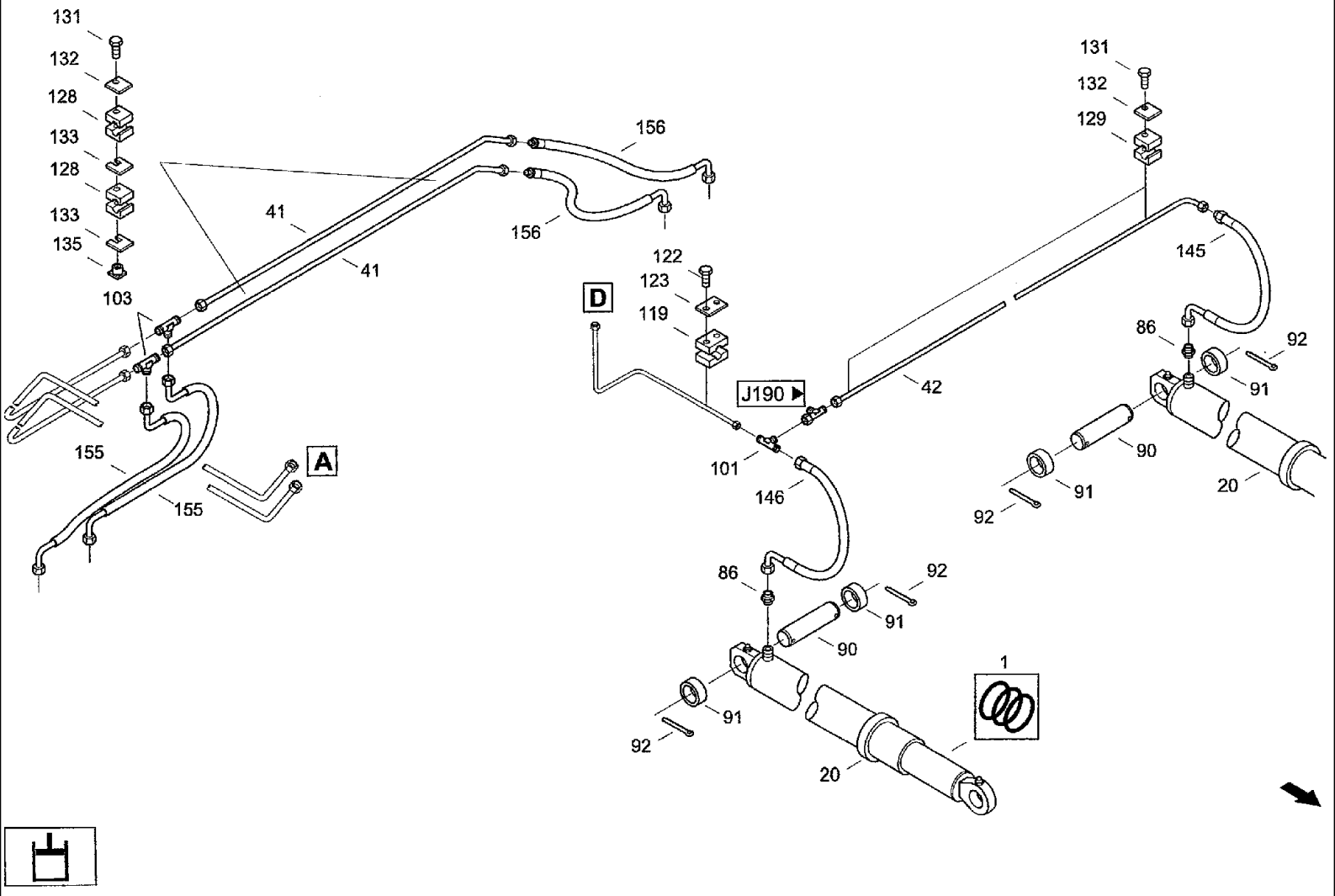
131
132
128
133
128
133
135
103
41
41
156
156
122
123
119
D
J190
42
131
132
129
145
86
92
91
90
91
92
20
155
155
A
101
146
86
92
91
90
91
92
20
1

Ref	Part Number	Qty	Description
202	06577052	4	WASHER, SPECIAL, Locking washer B10
211	03437534	2	FITTING, Male connector GEO8-L/M14x1,5/OMD/ A3C
203	895-11010	4	WASHER, M10 x 20 x 2, Washer 10.5DIN125ST

G085(01) HYDRAULIC SYSTEM- OPERATOR'S PLATFORM, GROUND COPYING FEATURE [CF80Q]

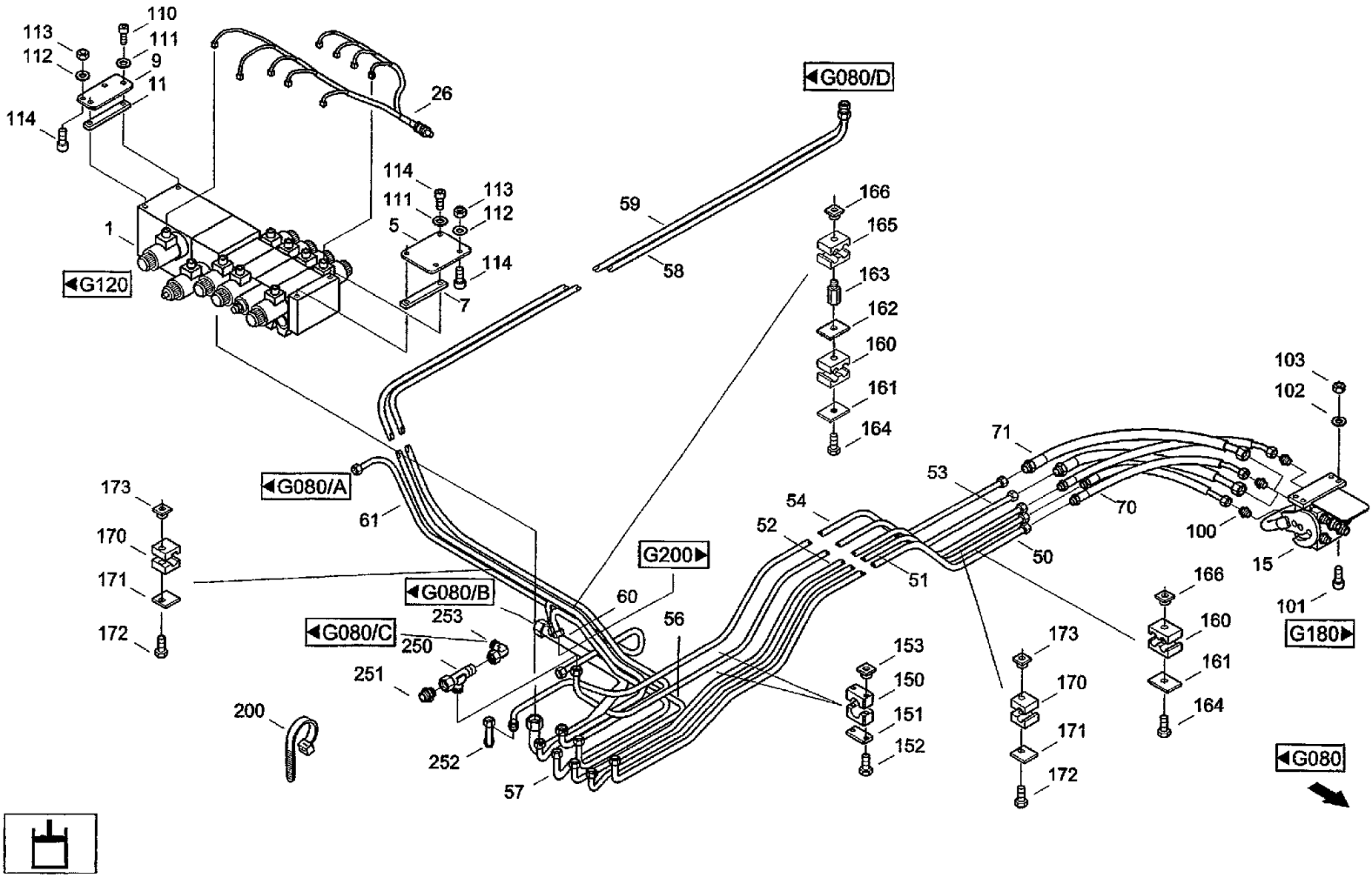

CF80 CASE IH CROSS FLOW COMBINE

G085(01) HYDRAULIC SYSTEM- OPERATOR'S PLATFORM, GROUND COPYING FEATURE [CF80Q]

Ref	Part Number	Qty	Description
1	31318067	1	VALVE BLOCK, Directional control valve 6-CL-08
5	31317982	1	SUPPORT, Suspension Vorn
7	31317990	1	PLATE, SPACER, Spacer plate Vorn
9	31318001	1	SUPPORT, Suspension Hinten
11	31318018	1	PLATE, SPACER, Spacer plate Hinten
15	03211872	1	COUPLING, QUICK, MALE, Clutch FH
26	07090360	1	HARNESS, Line x11
50	31318026	1	TUBE ASSY., Cpl. pipe HHV-2
51	31318034	1	TUBE ASSY., Cpl. pipe HHV-1
52	31318042	1	TUBE ASSY., Cpl. pipe HW-1
53	31318050	1	TUBE ASSY., Cpl. pipe HH-T
54	31318106	1	TUBE ASSY., Cpl. pipe HH-P
56	31318083	1	TUBE ASSY., Cpl. pipe QK-1
57	31318091	1	TUBE ASSY., Cpl. pipe QK-2
58	31318122	1	TUBE ASSY., Cpl. pipe ATR-1
59	31318130	1	TUBE ASSY., Cpl. pipe ATR-2
60	31318926	1	TUBE ASSY., Cpl. pipe PAH
61	31344743	1	TUBE ASSY., Cpl. pipe LS-1
70	06549641	3	HOSE, Hose line PHD206x700HLAOL45
71	06545840	2	HOSE, Hose line 2SN12CELDKOL45-700
100	03432722	3	ADAPTER, Male connector GE8-L/R3/8-ED/OMD
101	864-8020	2	SCREW, Hex Soc Hd, M8 x 20, 8.8, Cheese-head screw M8x20DIN9128.8
102	06577028	2	WASHER, SPECIAL, Locking washer M8
103	825-1408	2	NUT, M8, Cl 8,
110	864-8025	2	SCREW, Hex Soc Hd, M8 x 25, 8.8, Cheese-head screw M8x25 DIN912 8.8

G085(02) HYDRAULIC SYSTEM- OPERATOR'S PLATFORM, GROUND COPYING FEATURE [CF80Q]

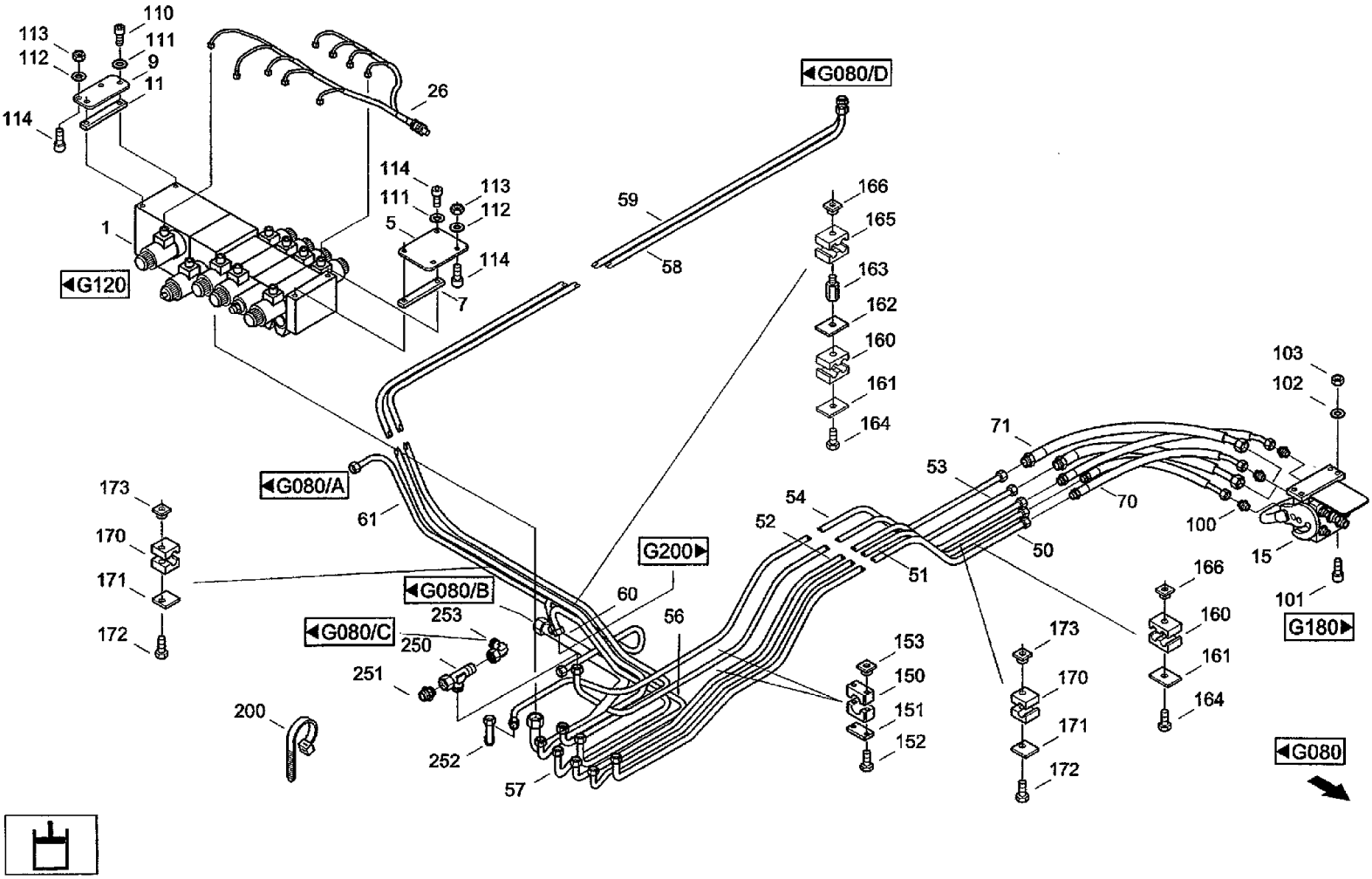

CF80 CASE IH CROSS FLOW COMBINE

G085(02) HYDRAULIC SYSTEM- OPERATOR'S PLATFORM, GROUND COPYING FEATURE [CF80Q]

Ref	Part Number	Qty	Description
111	97022010	4	SNAP RING, Locking ring VSK8
112	06577028	4	WASHER, SPECIAL, Locking washer M8
113	825-1408	4	NUT, M8, Cl 8,
114	864-8020	6	SCREW, Hex Soc Hd, M8 x 20, 8.8, Cheese-head screw M8x20 DIN912 8.8
150	06647620	7	SHIN, Clamping halves L-KP-2-R-15 DIN3015 PP
151	06646275	7	Cover plate DP2
152	814-6035	14	BOLT, Hex, M6 x 35, 8.8, Bolt, Hex, M6 x 35, 8.8, ISO 4014
153	06646138	14	Nut SM6
160	06647813	4	SHIN, Clamping halves Z-KP-1-R-8-8 DIN3015 PP
161	06647524	4	COVER, Cover plate Z-DP-1 DIN3015W1
162	060521635	1	PLATE, LOCKING, Lock plate SIV1-D
163	060521627	1	SCREW, Screw AF1-D
164	814-6035	4	BOLT, Hex, M6 x 35, 8.8, Bolt, Hex, M6 x 35, 8.8, ISO 4014
165	06647934	1	SHIN, Clamping halves Z-KP-1-R-10-10 DIN3015 PP
166	06646138	4	Nut SM6
170	06645676	4	SHIN, Clamping halves L-KP-0-R-8DIN3015PP
171	06645684	4	COVER, Cover plate L-DP-ODIN3015W1
172	814-6030	4	BOLT, Hex, M6 x 30, 8.8, Hex bolt M6x30 IS04014 8.8
173	06646138	4	Nut SM6
200	1309625	2	ANGLE, Cable band 1 88x4,8 PLT2S-MO
250	03438510	1	RESTRICTOR, Fitting XTR22/15/22-L
251	03438527	1	FITTING, Fitting GZ22-L
252	03433547	1	FITTING, Threaded elbow joint EW15-UOMD
253	03434492	1	FITTING, Threaded elbow joint EW22-L/OMD

G090 HYDRAULIC SYSTEM- DIRECTIONAL CONTROL VALVE [6SP-08]

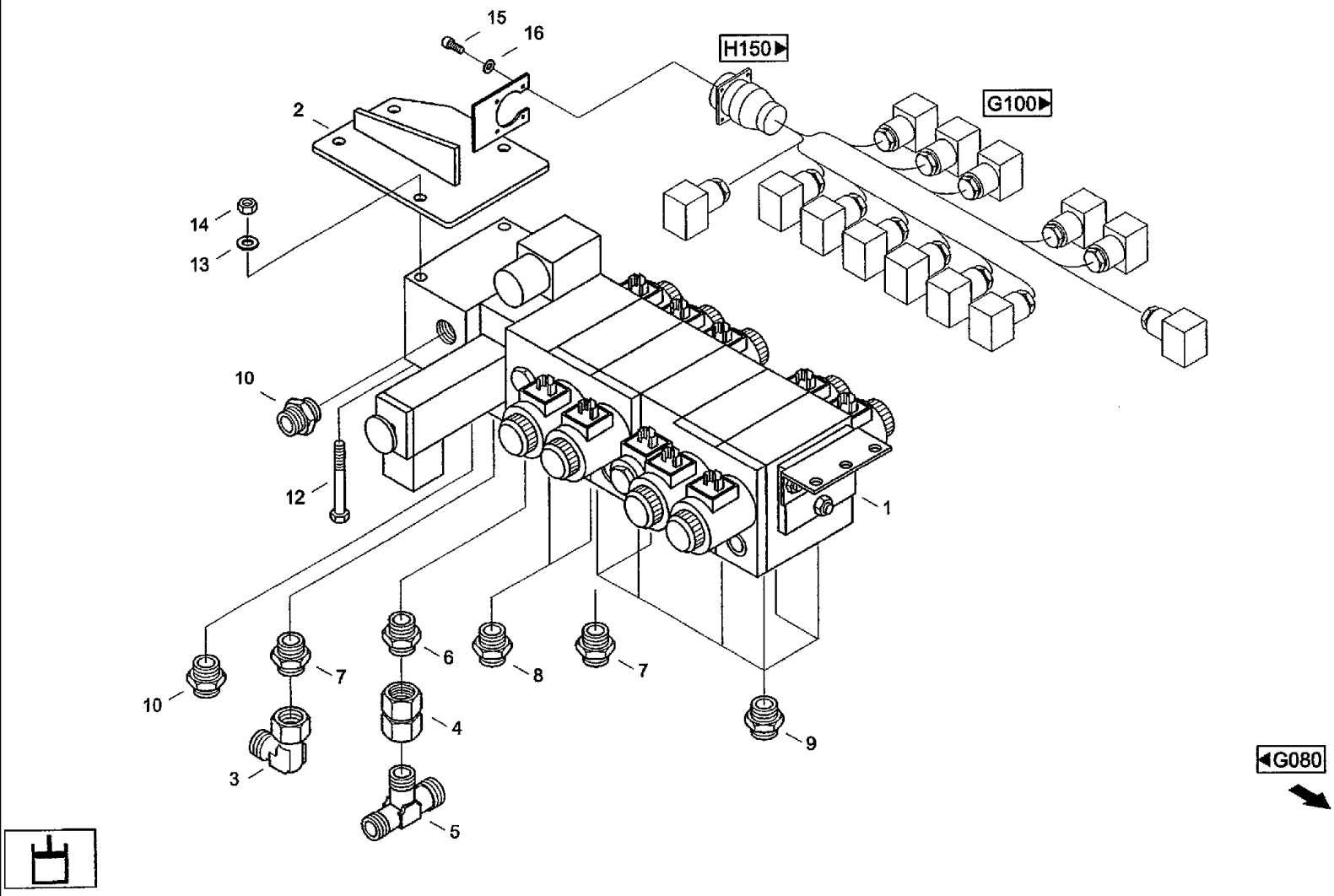

CF80 CASE IH CROSS FLOW COMBINE

G090 HYDRAULIC SYSTEM- DIRECTIONAL CONTROL VALVE [6SP-08]

Ref	Part Number	Qty	Description
1	061067805	1	VALVE BLOCK, Mobile control block 6SP-08
2	31289751	1	SUPPORT, Valve mounting
3	03433547	1	FITTING, Threaded elbow joint EW15-L/OMD
4	060523508	1	UNION, Fitting GZ15-L
5	03436236	1	RESTRICTOR, Fitting XTR22/15/15-L
6	03434218	1	ADAPTER, Male connector GE15-LR-ED/OMD
7	03433467	2	ADAPTER, Male connector GE15-L/R3/8-ED/OMD/
8	03432714	2	ADAPTER, Male connector GE12-LR-ED/OMD BEST-NR.
9	03432722	7	ADAPTER, Male connector GE8-L/R3/8-ED/OMD
10	03432730	2	ADAPTER, Male connector GE8-LR-ED/OMD
12	814-8090	2	BOLT, Hex, M8 x 90, 8.8, Hex bolt M8x90 ISO4014 8.8
13	06577028	2	WASHER, SPECIAL, Locking washer M8
14	825-1408	2	NUT, M8, Cl 8,
15	06003532	4	Cheese-head screw M3x8 DIN84 5.8
16	895-11003	4	WASHER, M3, Washer 3,2 DIN125 ST

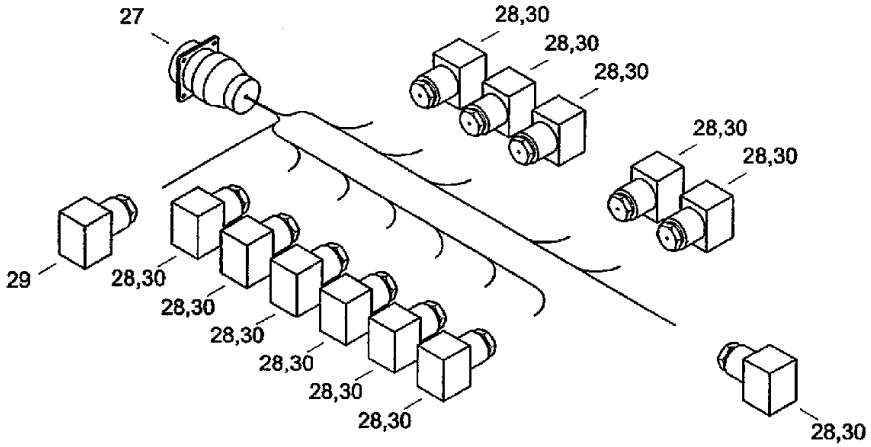
27
28,30
28,30
28,30
28,30
28,30
29
28,30
28,30
28,30
28,30
28,30
28,30
28,30

G090

CF80 CASE IH CROSS FLOW COMBINE

G100 HYDRAULIC SYSTEM- DIRECTIONAL CONTROL VALVE, LINE [X11]

Ref	Part Number	Qty	Description
27	061067975	1	LINE, Line X11
28	060521137	11	SOCKET, POWER, Branch box sw, AF3-PG9 DIN43650
29	060518873	1	BOX, TERMINAL, Cable box GRAU DIN43650A
30	060529722	11	GASKET, Seal

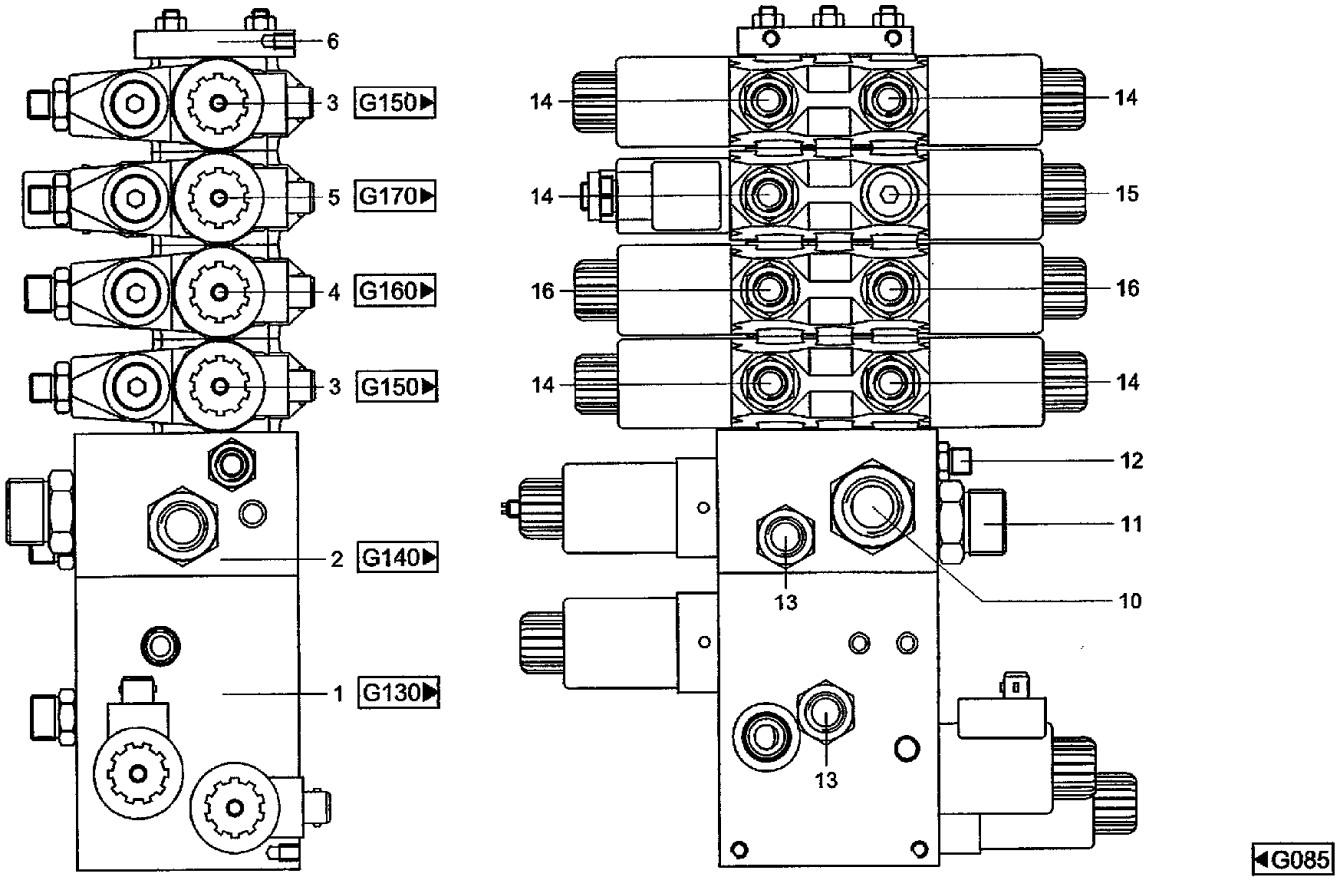
6
3
G150
5
G170
4
G160
3
G150
2
G140
1
G130
14
14
14
15
16
16
14
14
12
11
10
13
13
G085

CF80 CASE IH CROSS FLOW COMBINE

G120 HYDRAULIC SYSTEM- DIRECTIONAL CONTROL VALVE [6CL-08 / CF80Q]

Ref	Part Number	Qty	Description
1	03278607	1	VALVE BLOCK, Raise / lower section
2	03278615	1	PLATE, LARGE, Flow control valve section
3	03278623	2	WASHER, Control valve section
4	03278631	1	WASHER, Control valve section
5	03278648	1	VALVE BLOCK, Control valve section
6	03278656	1	PLATE, LARGE, End plate
10	03437575	1	FITTING, Male connector GE020-SM/OMD/
11	03437583	1	FITTING, Male connector GEO22L/M22x1,5/OMD A3C
12	03793987	1	Male connector GEO8-LM/OMD
13	03791735	2	Male connector GEO15LM/OMD
14	03437591	5	FITTING, Male connector GE08-L/M18x1,5/OMD A3C
15	03437614	1	CAP, FILLER, Locking screw VSTI-M18x1,5-OR
16	03437606	2	FITTING, Male connector GEO10-L/M18x1,5/OMD

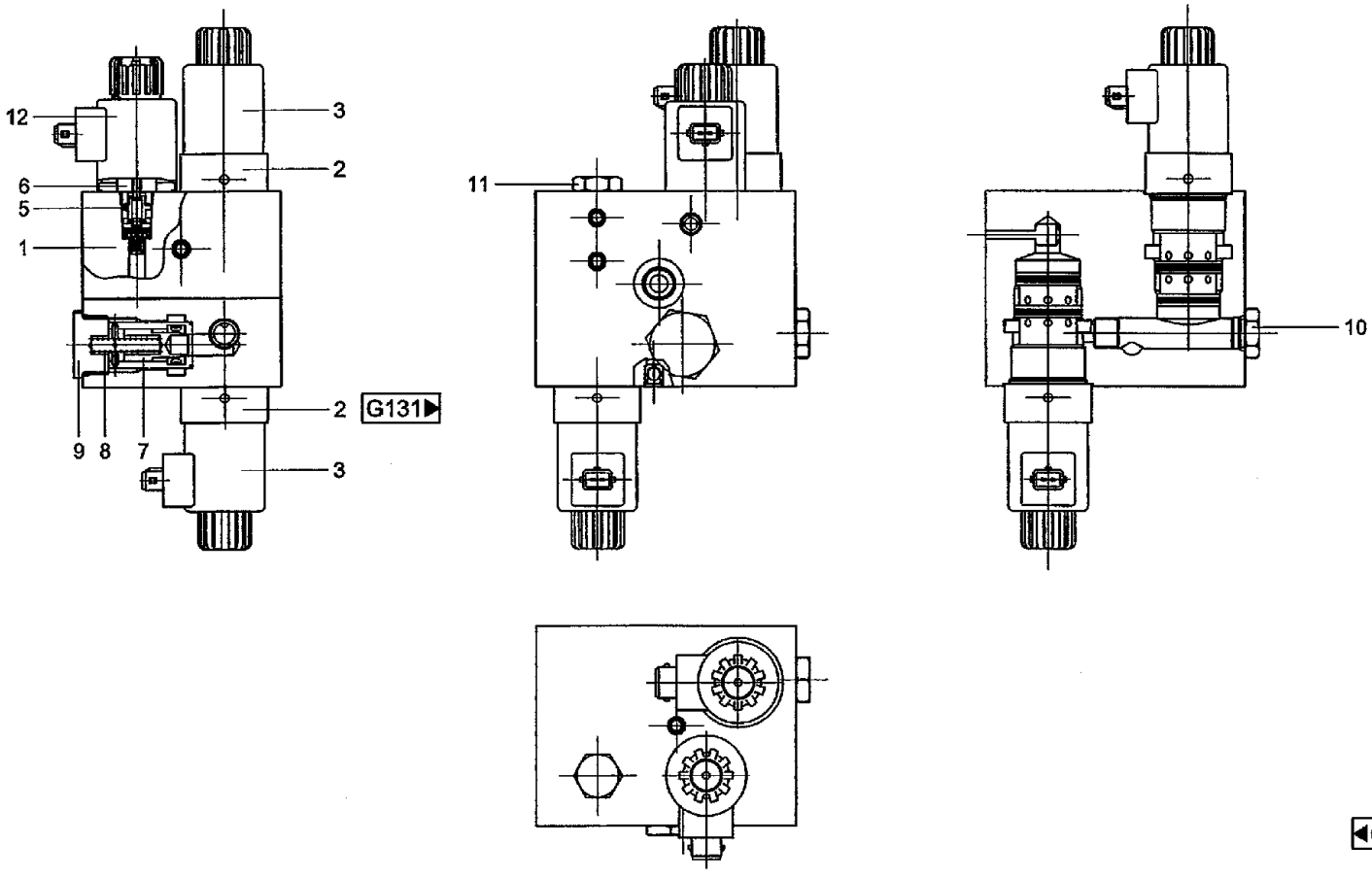
12
3
2
6
5
1
2
G131▶
9
8
7
3
11
10
◀G120

CF80 CASE IH CROSS FLOW COMBINE

G130 HYDRAULIC SYSTEM- RAISE/LOWER SECTION [CF80Q]

Ref	Part Number	Qty	Description
1	03278664	1	FRAME, Housing HUB-SENK-MODUL
2	03278672	2	REGULATOR, Current control CR1 0-60/60
3	03278680	2	SOLENOID, Coil 24V-PROP-100%
5	03278697	1	VALVE, Valve insert NG2
6	03278703	1	RACK, Frame NG2
7	03278711	1	SPOOL, Logic rv
8	03278728	1	SPRING, COMPRESSION, Spring RV 1,0x7,0x52
9	03278736	1	BLANK-OFF PLUG, Closure RV
10	03278744	1	BLANK-OFF PLUG, Cap
11	03278752	1	BLANK-OFF PLUG, Cap
12	03278760	1	SOLENOID, Coil 24V-PROP-100%

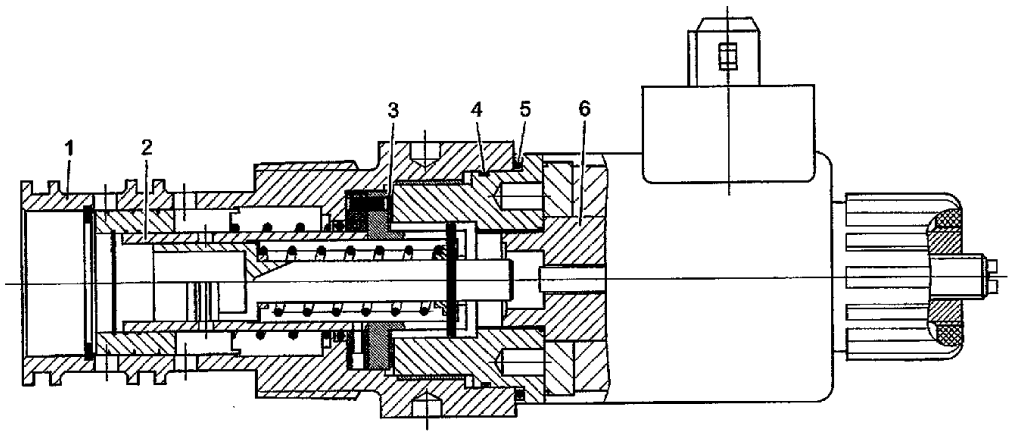

G130

CF80 CASE IH CROSS FLOW COMBINE

G131 HYDRAULIC SYSTEM- CURRENT CONTROL [CR10-60/60-CF80Q]

Ref	Part Number	Qty	Description
1	052652N1	1	HOUSING, Housing CR-10
2	052651N1	1	SLEEVE VALVE, Pressure scales CR-10
3	218039N0	1	WASHER, RUBBER, Wave washer spring CR-10/24,41x31, 37x0,36
4	215874N0	1	O-RING, O-ring CR-1 0/35,0x1 .5-NBR90
5	633405N0	1	O-RING, O-ring CR-10/36,2x3-NBR70
6	084055N0	1	SPOOL, Operation CR-10/24-VDC

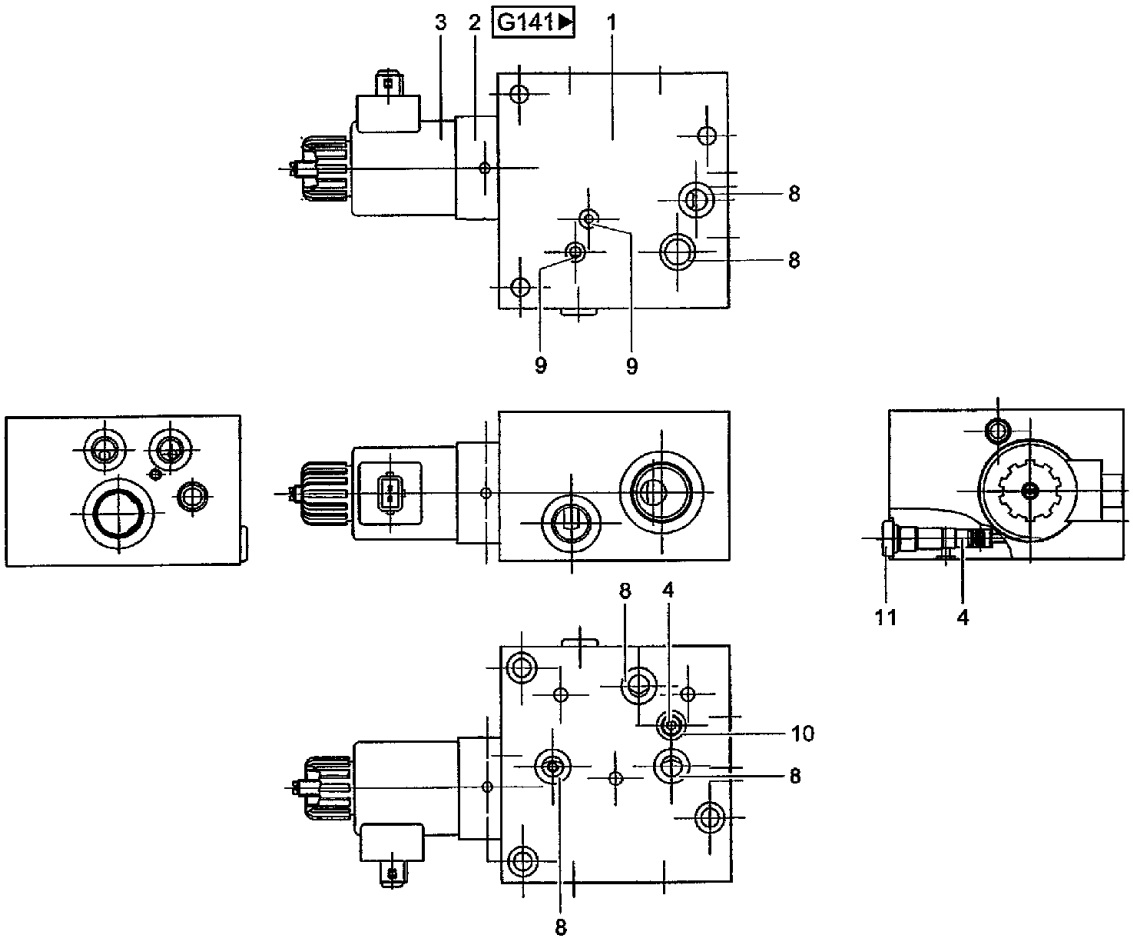

G120

CF80 CASE IH CROSS FLOW COMBINE

G140 HYDRAULIC SYSTEM- FLOW CONTROL VALVE SECTION [CF80Q]

Ref	Part Number	Qty	Description
1	03278777	1	FRAME, Housing STROMREGLERPLATTE
2	03278785	1	REGULATOR, Current control CR1 0-60/30
3	03278680	1	SOLENOID, Coil 24V-PROP-100%
4	03278793	2	VALVE, Shuttle valve STROMREGLERPLATTE
8	03278808	5	SEALRING, Kantseal 14x1,68
9	03278816	2	SEALRING, Kantseal 6,07x1,68
10	060165053	1	O-RING, O-ring 11x2-NBR85DIN3770
11	03437567	1	FITTING, Locking screw VSTIM12x1,5-OR

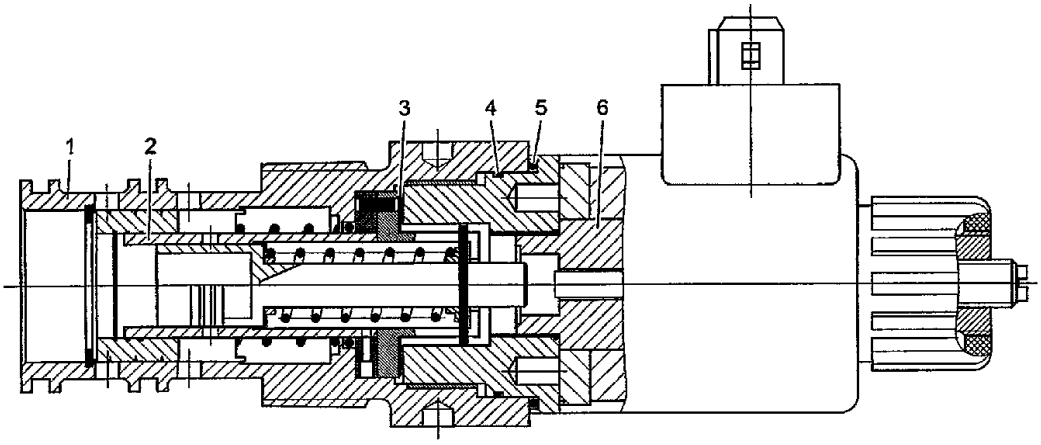

◀G140

CF80 CASE IH CROSS FLOW COMBINE

G141 HYDRAULIC SYSTEM- CURRENT CONTROL [CR10-60/30-CF80Q]

Ref	Part Number	Qty	Description
1	052652N1	1	HOUSING, Housing CR-10
2	052651N1	1	SLEEVE VALVE, Pressure scales CR-10
3	218039N0	1	WASHER, RUBBER, Wave washer spring CR-1 0/24,41x31, 37x0,36
4	215874N0	1	O-RING, O-ring CR-10/35,Ox1,5-NBR90
5	633405N0	1	O-RING, O-ring CR-10/36,2x3-NBR70
6	084055N0	1	SPOOL, Operation CR-10/24-VDC

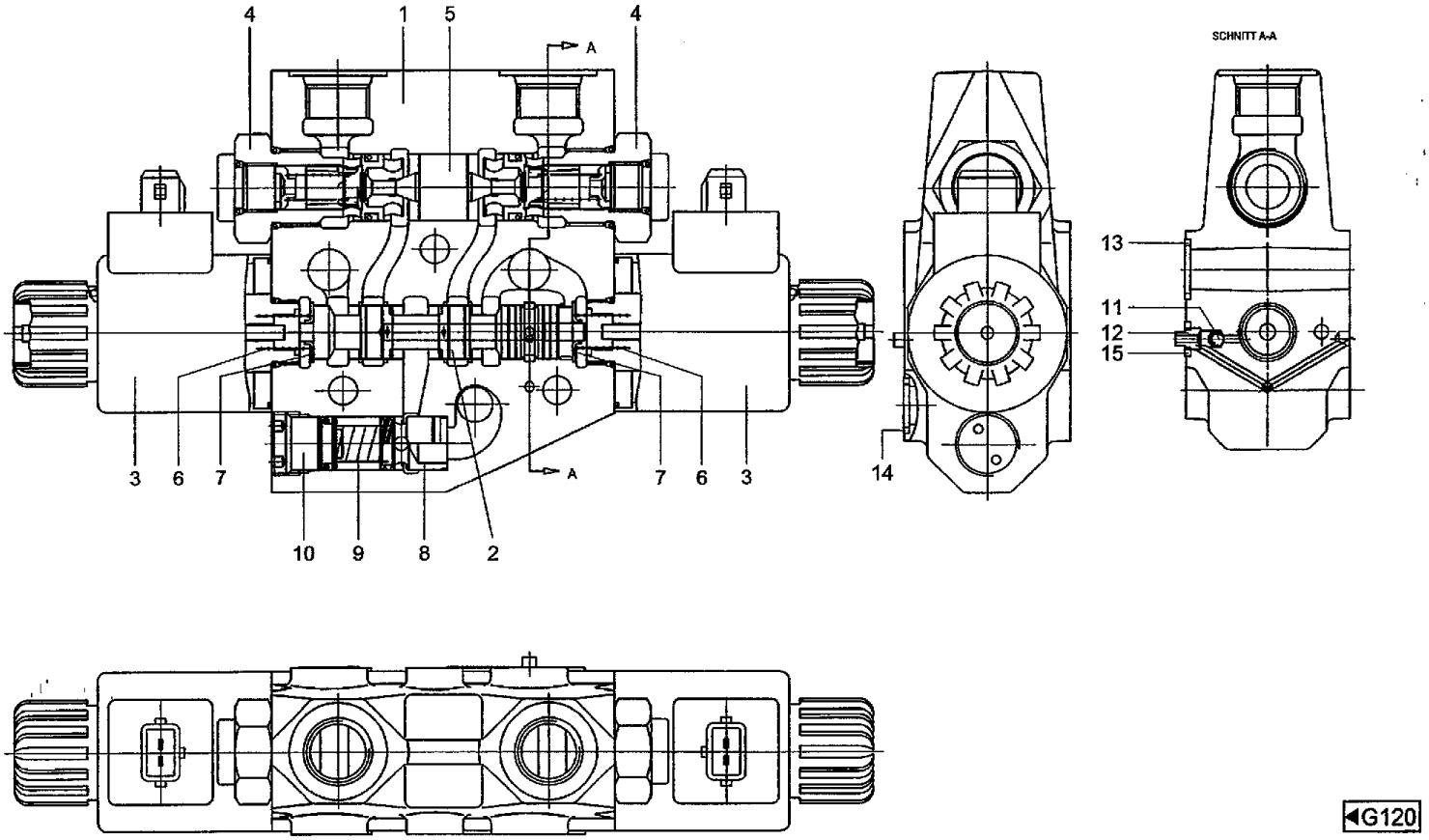

G120

CF80 CASE IH CROSS FLOW COMBINE

G150 HYDRAULIC SYSTEM- CONTROL VALVE SECTION [CF80Q]

Ref	Part Number	Qty	Description
1	03278832	1	FRAME, Housing CL-08
2	03278840	1	SPOOL, Piston CL-08-SW
3	03278857	2	SOLENOID, Magnet 24V-SW
4	03278865	2	VALVE, Valve check CL-08
5	03278873	1	SPOOL, Push-up piston CL-08
6	03278881	2	SPRING, Spring 1,25x8,3x16,5
7	03278898	2	SEAT, SPRING, Spring support 8,3mm
8	03278904	1	PRESSURE LIMITER, Pressure scales 2.0-CL-08
9	03278912	1	SPRING, Spring 1,6x10,1x19,0
10	03278920	1	SET SCREW, Adjusting bolt CL-08
11	03278937	1	BALL, Ball D=4,5mm
12	03278945	1	SEAT, Ball stop D=4,5mm
13	03278808	2	SEALRING, Kantseal 14x1,68
14	03278824	1	SEALRING, Kantseal 12,41x1,68
15	03278816	1	SEALRING, Kantseal 6,07x1,68

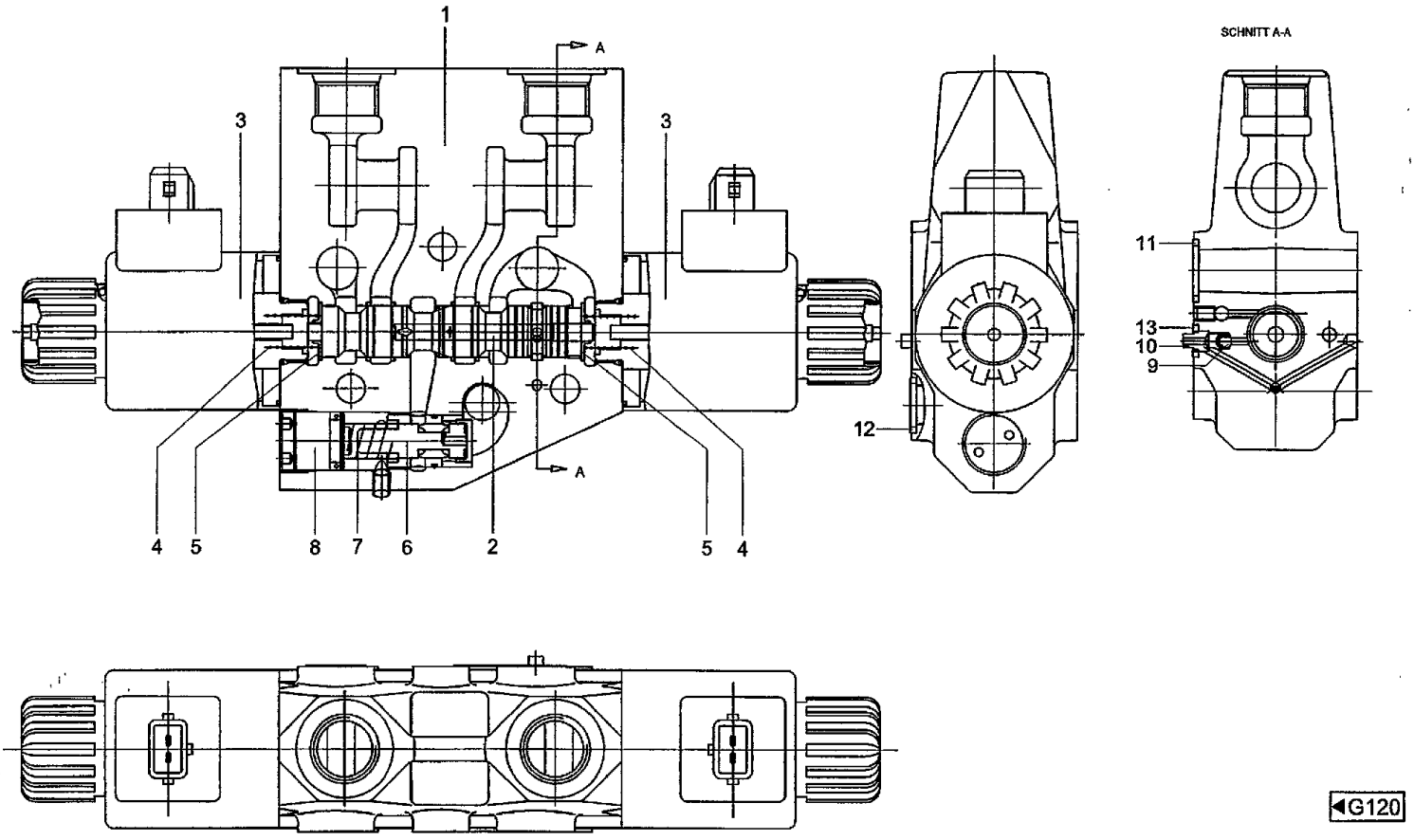

◀G120

CF80 CASE IH CROSS FLOW COMBINE

G160(01) HYDRAULIC SYSTEM- CONTROL VALVE SECTION [CF80Q]

Ref	Part Number	Qty	Description
1	03278953	1	FRAME, Housing CL-08
2	03278961	1	SPOOL, Piston CL-08-PROP
3	03278680	2	SOLENOID, Coil 24V-PROP-100%
4	03278978	2	SPRING, Spring 1,4x8,6x15,8
5	03278898	2	SEAT, SPRING, Spring support 8,3mm
6	03278986	1	SPOOL, Pressure scales CL-08-PROP
7	03278912	1	SPRING, Spring 1,6x10,1x19,0
8	03278994	1	STOP, Cap CL-08-PROP
9	03278937	1	BALL, Ball D=4,5mm
10	03278945	1	SEAT, Ball stop D=4,5mm
11	03278808	2	SEALRING, Kantseal 14x1,68
12	03278824	1	SEALRING, Kantseal 12,41x1,68
13	03278816	1	SEALRING, Kantseal 6,07x1,68

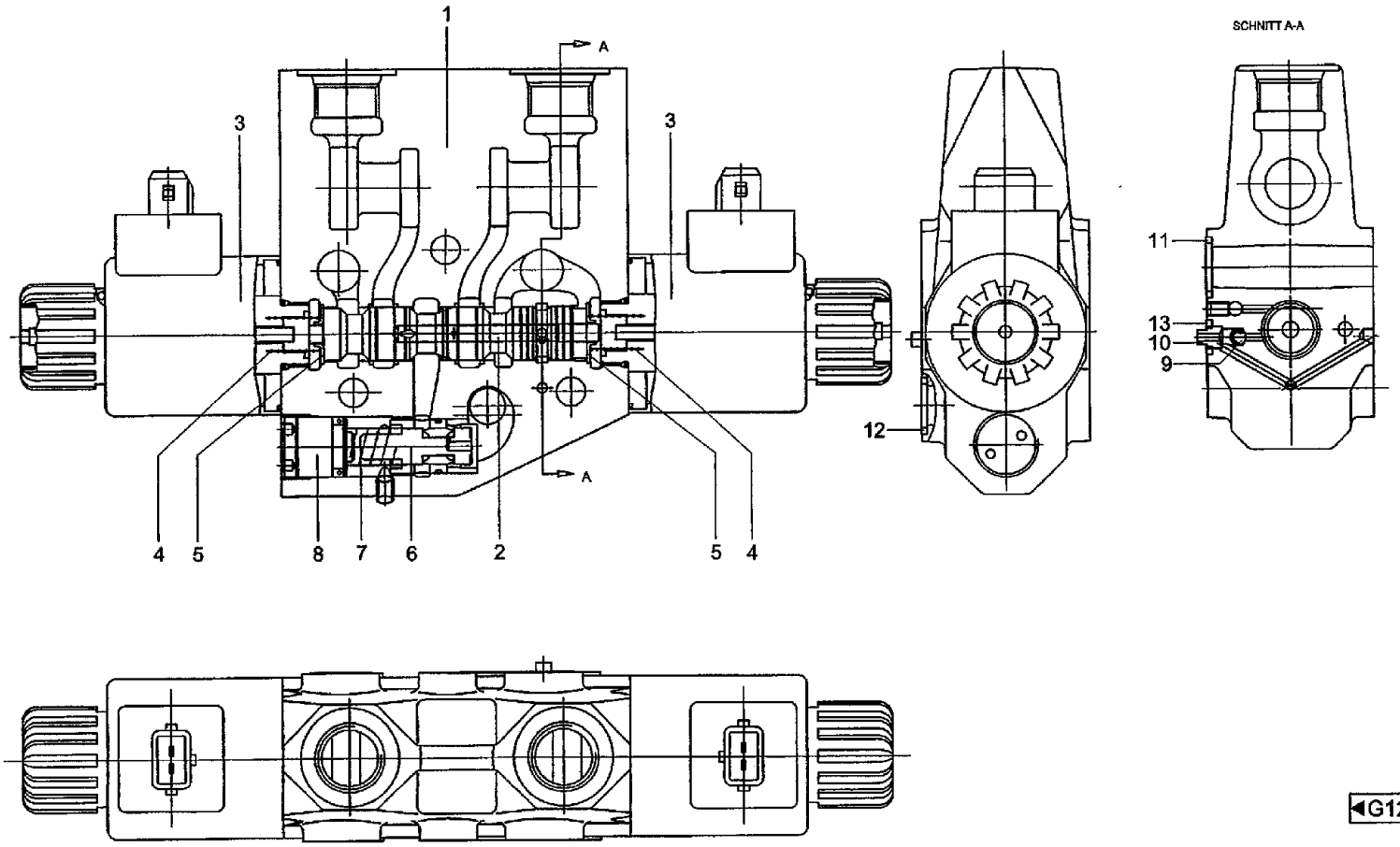

◄G120

CF80 CASE IH CROSS FLOW COMBINE

G160(02) HYDRAULIC SYSTEM- CONTROL VALVE SECTION [CF80Q]

Ref	Part Number	Qty	Description
1	03278953	1	FRAME, Housing CL-08
2	03278961	1	SPOOL, Piston CL-08-PROP
3	03278680	2	SOLENOID, Coil 24V-PROP-100%
4	03278978	2	SPRING, Spring 1,4x8,6x15,8
5	03278898	2	SEAT, SPRING, Spring support 8,3mm
6	03278986	1	SPOOL, Pressure scales CL-08-PROP
7	03278912	1	SPRING, Spring 1,6x10,1x19,0
8	03278994	1	STOP, Cap CL-08-PROP
9	03278937	1	BALL, Ball D=4,5mm
10	03278945	1	SEAT, Ball stop D=4,5mm
11	03278808	2	SEALRING, Kantseal 14x1,68
12	03278824	1	SEALRING, Kantseal 12,41x1,68
13	03278816	1	SEALRING, Kantseal 6,07x1,68

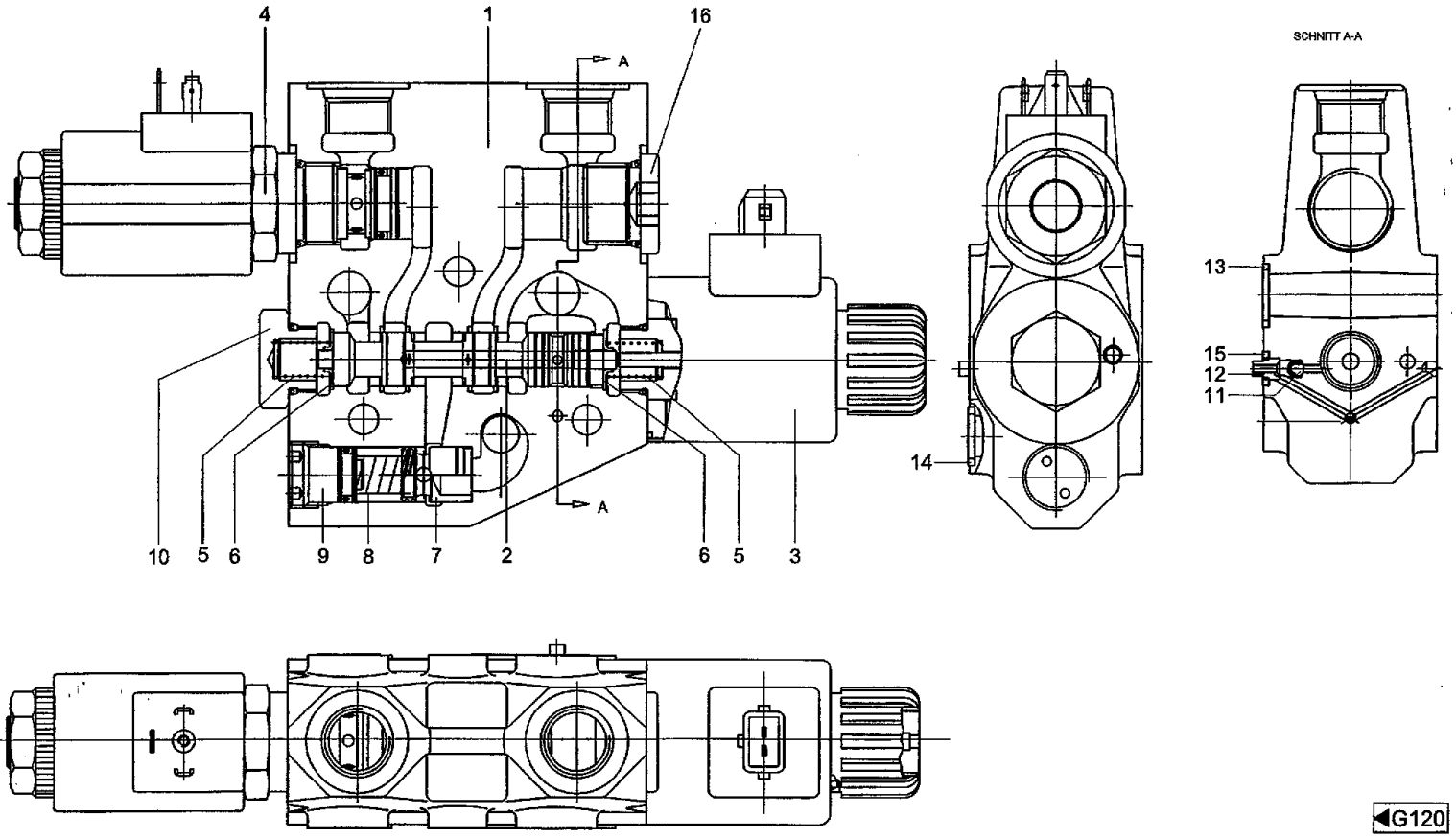

◀G120

CF80 CASE IH CROSS FLOW COMBINE

G170 HYDRAULIC SYSTEM- CONTROL VALVE SECTION [CF80Q]

Ref	Part Number	Qty	Description
1	03279005	1	HOUSING, Housing CL-08
2	03278840	1	SPOOL, Piston CL-08-SW
3	03278857	1	SOLENOID, Magnet 24V-SW
4	03279013	1	VALVE, PRESSURE RELIEF, Check valve COMATROL
5	03278881	2	SPRING, Spring 1,25x8,3x16,5
6	03278898	2	SEAT, SPRING, Spring support 8,3mm
7	03278904	1	PRESSURE LIMITER, Pressure scales 2.0-CL-08
8	03278912	1	SPRING, Spring 1,6x10,1x19,0
9	03278920	1	SET SCREW, Adjusting bolt CL-08
10	03279021	1	CAP, FILLER, Cap CL-08
11	03278937	1	BALL, Ball D=4,5mm
12	03278945	1	SEAT, Ball stop D=4,5mm
13	03278808	2	SEALRING, Kantseal 14x1,68
14	03278824	1	SEALRING, Kantseal 12,41x1,68
15	03278816	1	SEALRING, Kantseal 6,07x1,68
16	03437614	2	CAP, FILLER, Locking screw VSTI-M18x1,5-OR

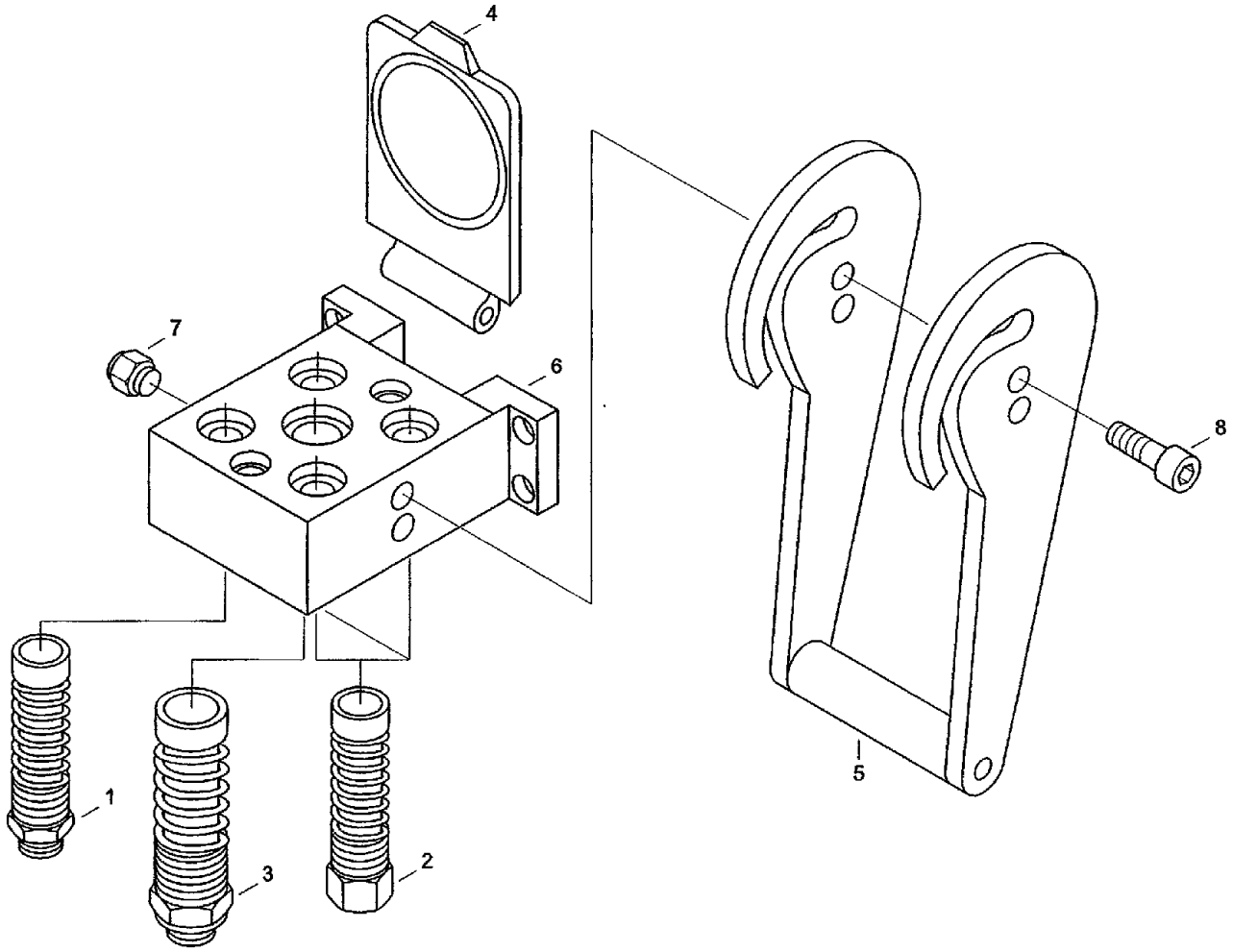

◀G080
◀G085

CF80 CASE IH CROSS FLOW COMBINE

G180 HYDRAULIC SYSTEM- CLUTCH

Ref	Part Number	Qty	Description
1	03211897	1	COUPLING, SPLINED, Clutch FH-M22x1,5
2	03211903	3	COUPLING, SPLINED, Clutch FH-3/8""
3	03211952	1	COUPLING, SPLINED, Clutch FH-1/2""
4	03211936	1	PROTECTOR, Dust protection
5	03211944	1	LEVER, Lever
6	03129283	1	SUPPORT, Housing FH-KUPPLUNG
7	03129291	1	SCREW, Latching device FH-KUPPLUNG
8	03129306	1	SCREW, Screw FH-KUPPLUNG

G190(01) HYDRAULIC SYSTEM- PRIORITY VALVE ASSEMBLY [CF80P]

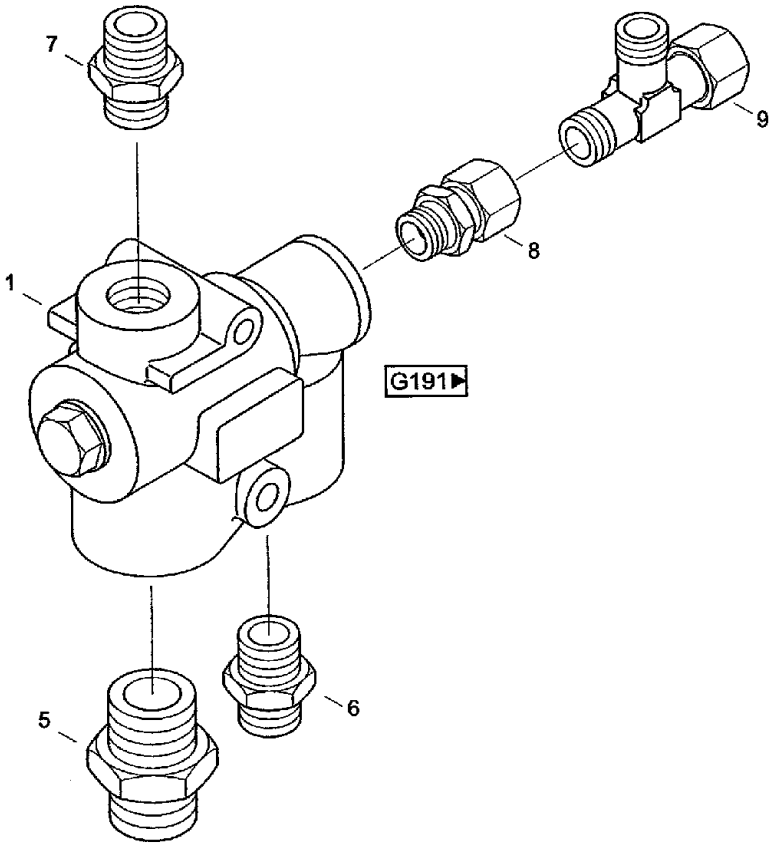

◀G080

CF80 CASE IH CROSS FLOW COMBINE

G190(01) HYDRAULIC SYSTEM- PRIORITY VALVE ASSEMBLY [CF80P]

Ref	Part Number	Qty	Description
1	061068027	1	VALVE, Priority valve OLS 120 DYNAMIC INT. 7BAR 152
5	03435637	1	ADAPTER, Male connector GE25-S/R3/4/OMD
6	03436293	1	TUBE, Male connector GE15-L/R3/4-/OMD
7	03434218	1	ADAPTER, Male connector GE15-LR-ED/OMD
8	03432730	1	ADAPTER, Male connector GE8-LR-ED/OMD
9	03436357	1	FITTING, Right-angle screwing EL8-L/OMD

G190(02) HYDRAULIC SYSTEM- PRIORITY VALVE ASSEMBLY [CF80Q]

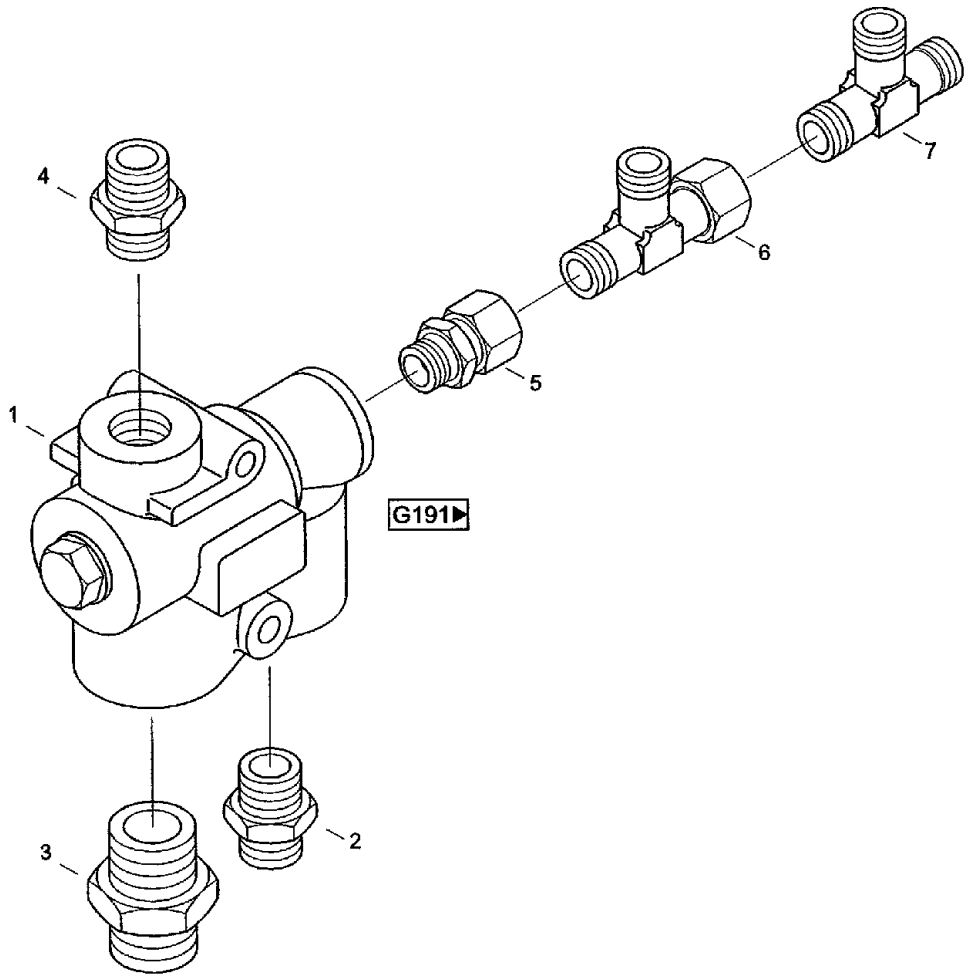

G080

CF80 CASE IH CROSS FLOW COMBINE

G190(02) HYDRAULIC SYSTEM- PRIORITY VALVE ASSEMBLY [CF80Q]

Ref	Part Number	Qty	Description
1	061068027	1	VALVE, Priority valve OLS 120 DYNAMIC INT. 7BAR 152
2	03434556	1	ADAPTER, Male connector GE20-SR-ED/OMD
3	03435637	1	ADAPTER, Male connector GE25-S/R3/4/OMD
4	03434218	1	ADAPTER, Male connector GE15-LR-ED/OMD
5	03436775	1	ADAPTER, Male connector EGE8-LR-ED/OMD/A3C
6	03436357	1	FITTING, Right-angle screwing EL8-L/OMD
7	060516943	1	VALVE, Shuttle valve xVW 8-L/A3C

G191 HYDRAULIC SYSTEM- PRIORITY VALVE ASSEMBLY [OLS 120]

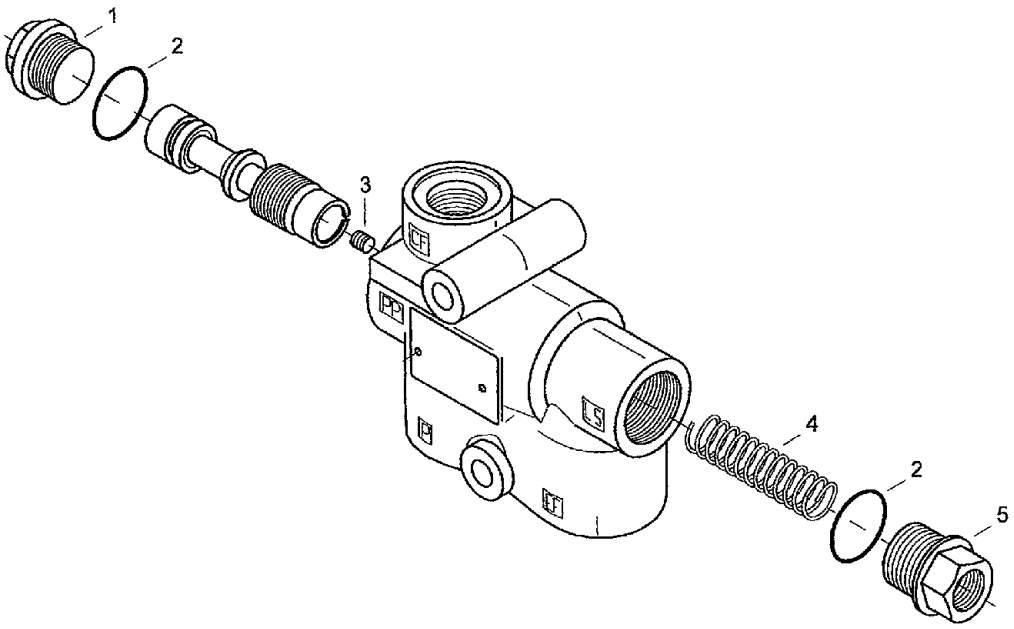

◄G190

CF80 CASE IH CROSS FLOW COMBINE

G191 HYDRAULIC SYSTEM- PRIORITY VALVE ASSEMBLY [OLS 120]

Ref	Part Number	Qty	Description

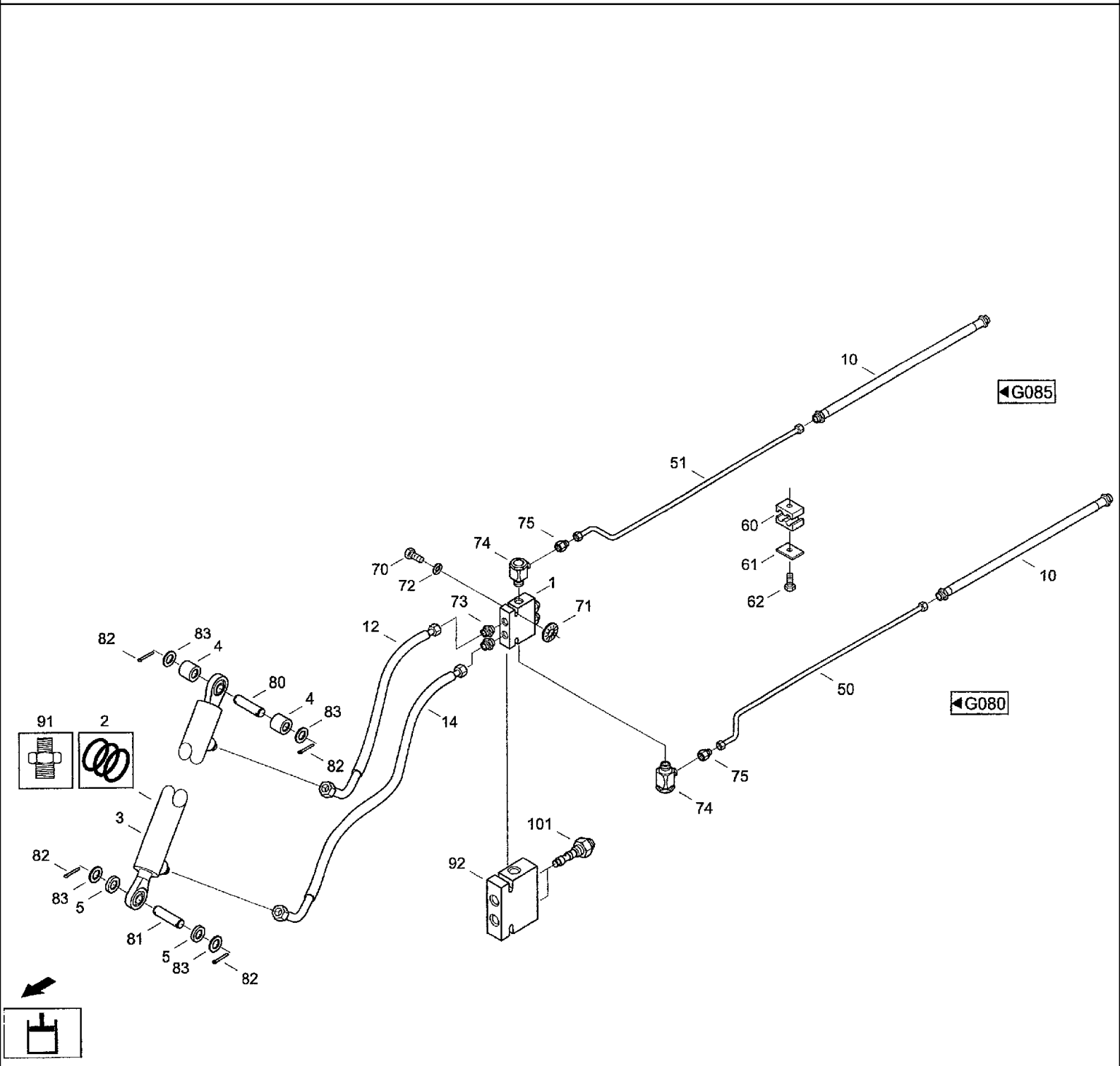
10
G085
51
75
74
70
72
1
73
71
12
60
61
62
10
82
83
4
80
4
83
82
14
50
G080
91
2
75
74
3
101
92
82
83
5
81
5
83
82

CF80 CASE IH CROSS FLOW COMBINE

G200(01) HYDRAULIC SYSTEM- FEEDER [CF80K/CF80Q]

Ref	Part Number	Qty	Description
1	03129275	1	VALVE BLOCK, Lowering brake valve YC-440-2G3/8BEC4,5-1
2	03129396	1	KIT, GASKET, Seal kit
3	03129226	1	CYLINDER ASSY., Cylinder 40/25x250MLS 089147.0
4	31344003	2	SPACER, RING, Spacer bushing
5	061032756	2	SPACER, Spacer washer
10	06545937	2	HOSE, Hose line 2SN8CELCEL-550SSK
12	06545920	1	HOSE, Hose line 2SN8DKOLDKOL90- 600SSK
14	06545912	1	HOSE, Hose line 2SN8DKOLDKOL90- 800SSK
50	31318155	1	TUBE ASSY., Cpl. pipe QK-3
51	31318163	1	TUBE ASSY., Cpl. pipe QK-4
60	06647934	2	SHIN, Clamping halves Z-KP-1-R-10-10 DIN3015 PP
61	06647524	2	COVER, Cover plate Z-DP-1 DIN3015W1
70	814-6045	2	BOLT, Hex, M6 x 45, 8.8, Hex bolt M6x45ISO40148.8
71	06577124	2	WASHER, Locking washer B6
72	895-11012	2	WASHER, M12 x 24 x 2.5, Washer 13DIN125ST
73	03432755	2	ADAPTER, Male connector GE10-L/R3/8-ED/OMD
74	060531251	2	FITTING, Pivotong joint WH12-LR KDS/OMD
75	03432400	2	CONE, Adapter flow reduc. RED12/10-L/OMD
80	07612884	1	Bolt B20H1 1x65x48 DIN1443 ST
81	07600052	1	PIN, LARGE, Bolt B20H11x70x54DIN1443ST
82	06402730	4	PIN, SPLIT (COTTER), Splint pin 5x32 DIN94 ST
83	06562255	4	WASHER, Washer 21 DIN7349 ST
91	03437542	2	FITTING, Male connector GEO10-LM/OMD/
92	03129435	1	VALVE BLOCK, SBV housing YC221447/10-3L/G3/8
62	814-6040	2	BOLT, Hex, M6 x 40, 8.8, Hex, M6 x 40, 8.8, ISO4014

G200(02) HYDRAULIC SYSTEM- FEEDER [CF80K/CF80Q]

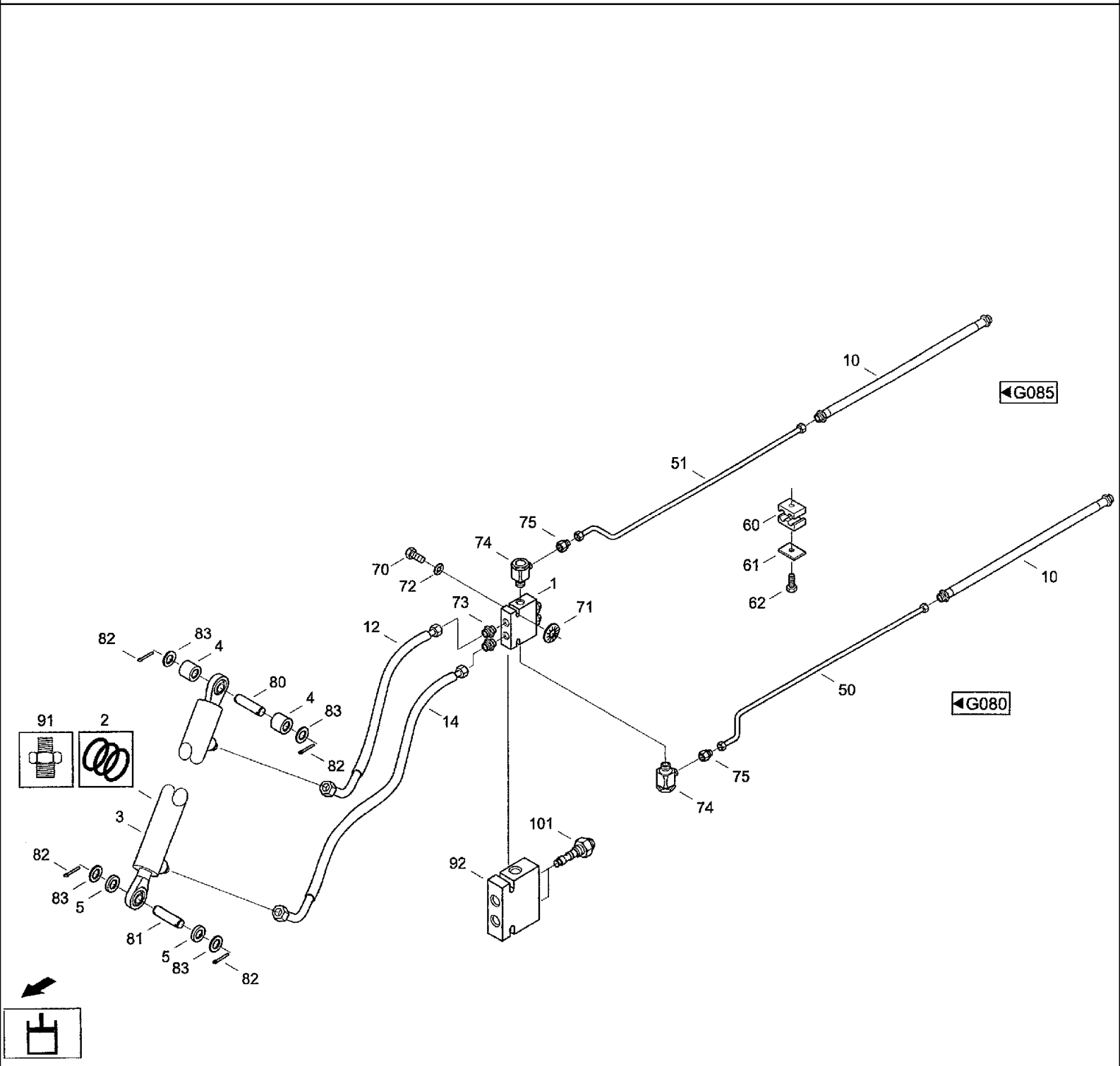

CF80 CASE IH CROSS FLOW COMBINE

G200(02) HYDRAULIC SYSTEM- FEEDER [CF80K/CF80Q]

Ref	Part Number	Qty	Description
101	03437550	2	FITTING, SBV cartridge YC440-1-B-0-E-C--

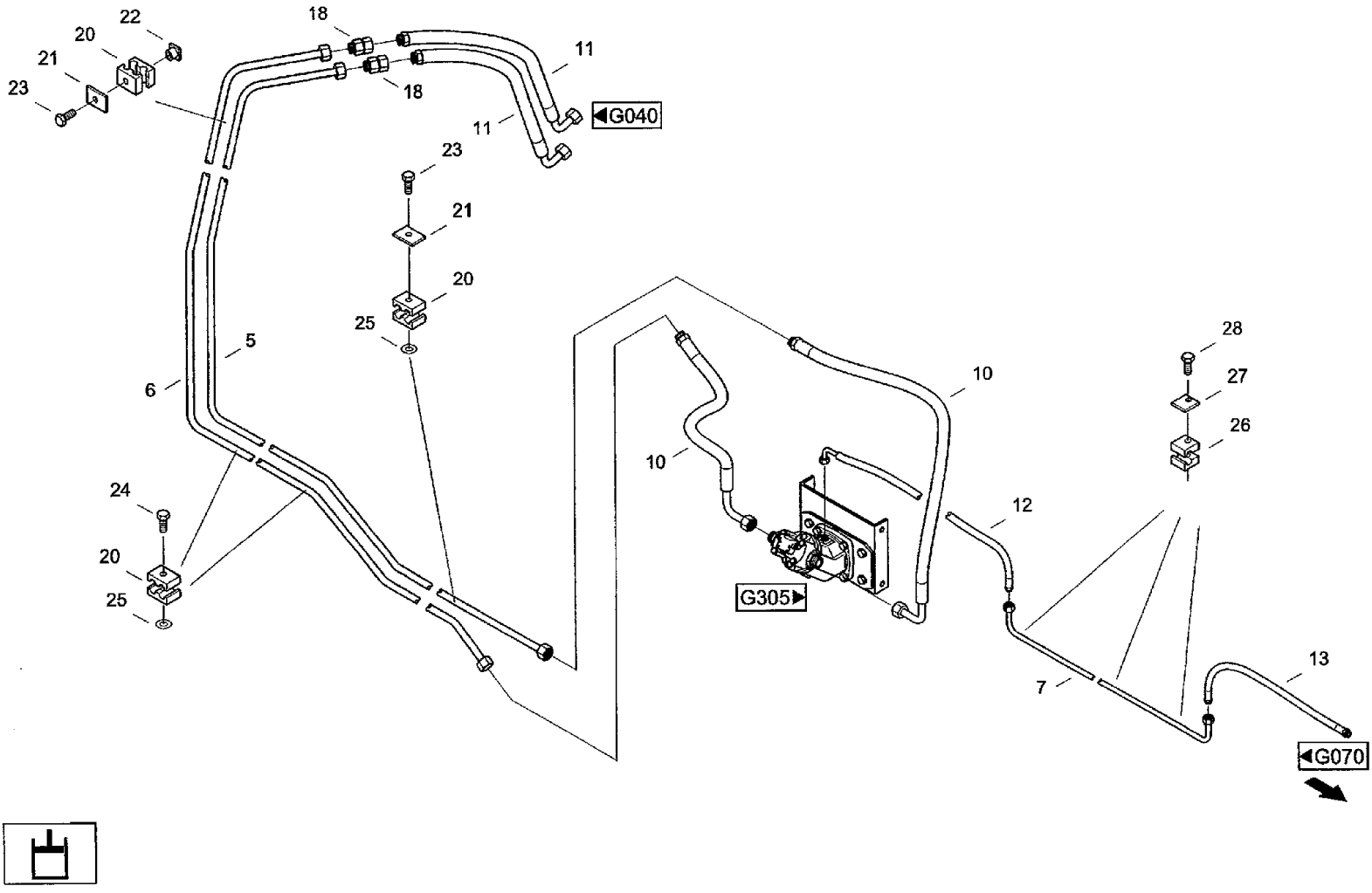
22
20
21
23
18
18
11
11
◀G040
23
21
20
25
5
6
24
20
25
10
10
G305▶
28
27
26
12
7
13
◀G070

CF80 CASE IH CROSS FLOW COMBINE

G300 HYDRAULIC SYSTEM- FAN

Ref	Part Number	Qty	Description
5	02818426	1	TUBE ASSY., Cpi. pipe GA-A
6	02818434	1	TUBE ASSY., Cpl. pipe GA-B
7	02818442	1	TUBE ASSY., Cpl. pipe GA-L
10	06549432	2	HOSE, Hose line PHD413x750HSAOS90
11	06549440	2	HOSE, Hose line PH D4 1 6x1 250AOSAOS90
12	060531862	1	HOSE, Hose line PHD 106x600 HLAOL90
13	060531854	1	HOSE, Hose line PHD 1 06x400 HLAOL
18	03434113	2	RESTRICTOR, G-reduction XGR20/16-S
20	06647918	4	FIXING BRACKET, Clamp body 216/16PP
21	06647565	2	COVER, Cover plate Z-DP-2DIN3015W1
22	060525261	1	NUT, Nut SM8
23	614-8035	2	BOLT, Hex, M8 x 35, 8.8, Hex bolt M8X35ISO40178.8
24	06648211	2	SCREW, Screw Z-AS-2-W1 DIN3015
25	06648293	2	STIFFENER, Locking against pivoting Z-VS-2-W1 DIN3015 F.GROSSE2-5
26	06645676	3	SHIN, Clamping halves L-KP-O-R-8 DIN3015 PP
27	06645684	3	COVER, Cover plate L-DP-ODIN3015W1
28	614-6030	3	BOLT, Hex, M6 x 30, 8.8, Full Thd, Hex bolt M6x30ISO40178.8

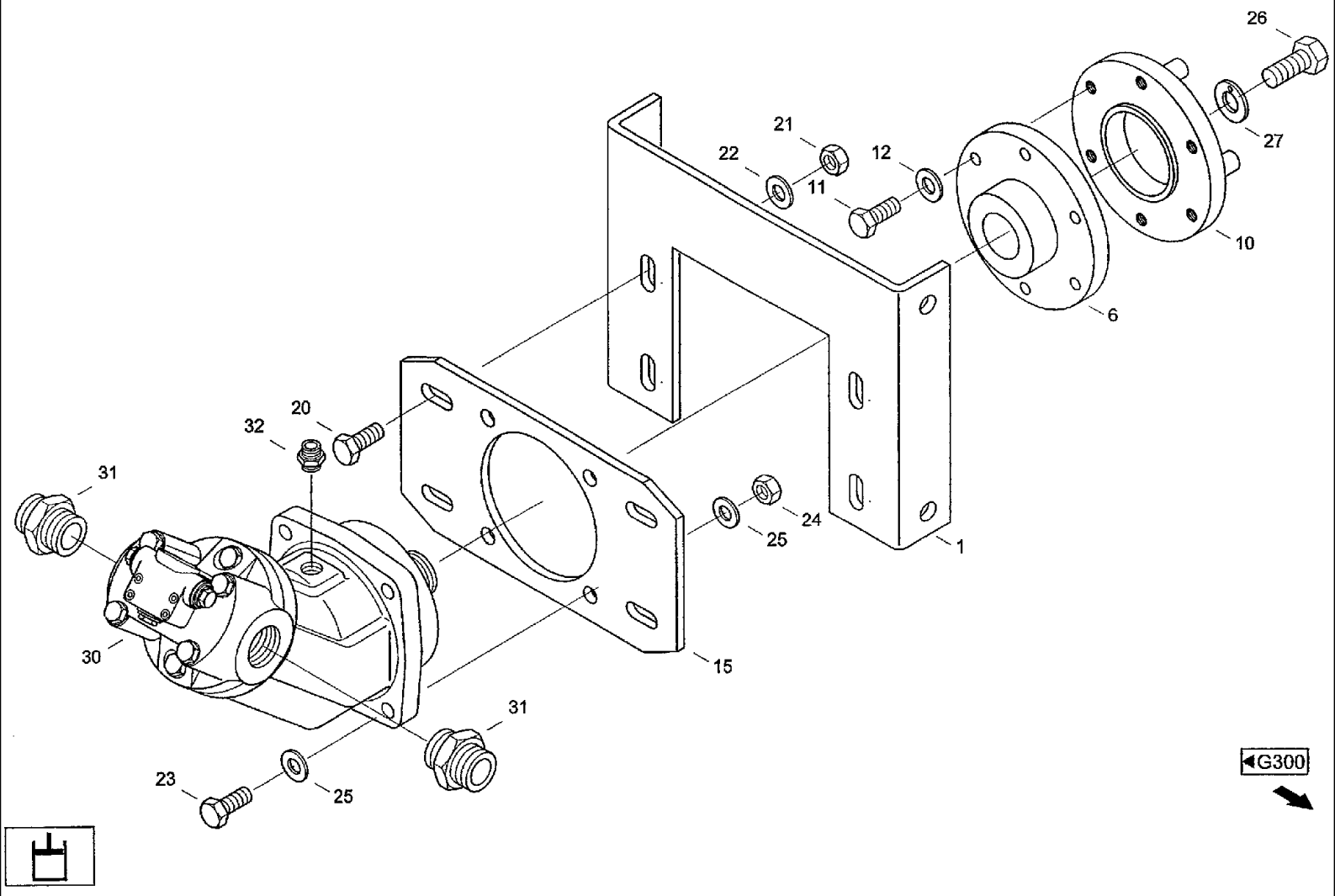
26
27
21
22
12
11
10
6
20
32
31
24
25
1
30
15
31
23
25
G300

CF80 CASE IH CROSS FLOW COMBINE

G305 HYDRAULIC SYSTEM- FAN DRIVE MOTOR

Ref	Part Number	Qty	Description
1	061075315	1	BRACKET, Console
6	061075356	1	BLOCK DRIVER, Follower ГО00-10.60.000 МУФТА
10	072047647	1	RING ASSY., Dog ring ГО00-10.55.001 ПОЛУМУФТА
11	614-6020	6	BOLT, Hex, M6 x 20, 8.8, Hex bolt M6x20ISO40178.8
12	06577036	6	WASHER, SPECIAL, Locking washer M6
15	061075331	1	PLATE, LARGE, Plate
20	614-8025	4	BOLT, Hex, M8 x 25, 8.8,
21	825-1408	4	NUT, M8, Cl 8,
22	06577028	4	WASHER, SPECIAL, Locking washer M8
23	614-8030	4	BOLT, Hex, M8 x 30, 8.8, Hex bolt M8x30ISO40178.8
24	825-1408	4	NUT, M8, Cl 8,
25	06577044	8	WASHER, SPECIAL, Locking washer B8
26	614-10025	1	BOLT, Hex, M10 x 25, 8.8, Full Thd, Hex bolt M1 0x25150401 7 8.8
27	06602352	1	End washer TGL1 7481 -(011x40)
30	061067918	1	MOTOR, HYDRAULIC, Constant motor A2FM16/61W-NAB 030
31	060534061	2	FITTING, Male connector GE16-SM-ED/OMD
32	03433112	1	ADAPTER, Male connector GE8-LM-ED/OMD

G330 HYDRAULIC SYSTEM- OIL TANK, VARIOUS COMPONENTS

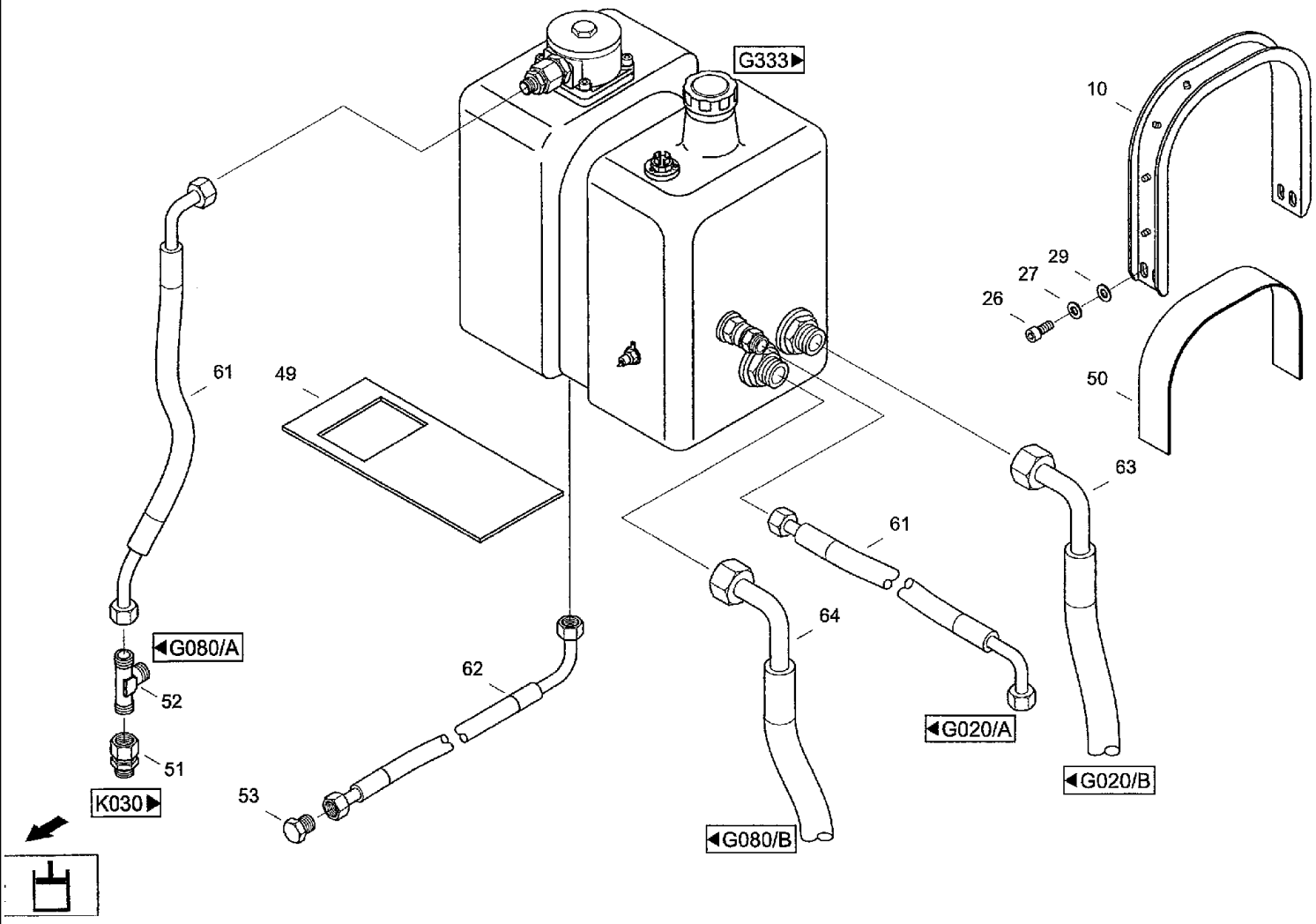

CF80 CASE IH CROSS FLOW COMBINE

G330 HYDRAULIC SYSTEM- OIL TANK, VARIOUS COMPONENTS

Ref	Part Number	Qty	Description	
10	31286113	1	FIXING BRACKET, Attachment bracket	Г000-20.70.000 ХОМУТ
26	97007361	4	SCREW, Cheese-head screw M10X16DIN69128.8	
27	06577003	4	WASHER, SPECIAL, Locking washer M10	
49	31286138	1	PAD, RUBBER, Rubber pad	Г000-20.30.005 УПЛОТНЕНИЕ
50	061068043	1	PAD, RUBBER, Rubber strip	Г000-20.00.009 УПЛОТНЕНИЕ
51	03440064	1	FITTING, Male connector EGE28-LM-ED	
52	03436670	1	RESTRICTOR, Fitting XTR28/22/28	
53	060523196	1	VANEUM GAUGE, Closure part XROV18-L/A3C	
61	06549346	2	HOSE, Hose line PHD125X900AOLAOL90	
62	06549354	1	HOSE, Hose line PND316x3000AOLAOL90	
63	06549362	1	HOSE, Hose line PSG140x1 150AOL90- 90GRAD	
64	06549370	1	HOSE, Hose line PSG 1 40x1 400AOL90SF90	
29	895-11010	4	WASHER, M10 x 20 x 2, Washer 10.5DIN125ST	

CF80 CASE IH CROSS FLOW COMBINE

G333(01) HYDRAULIC SYSTEM- OIL TANK

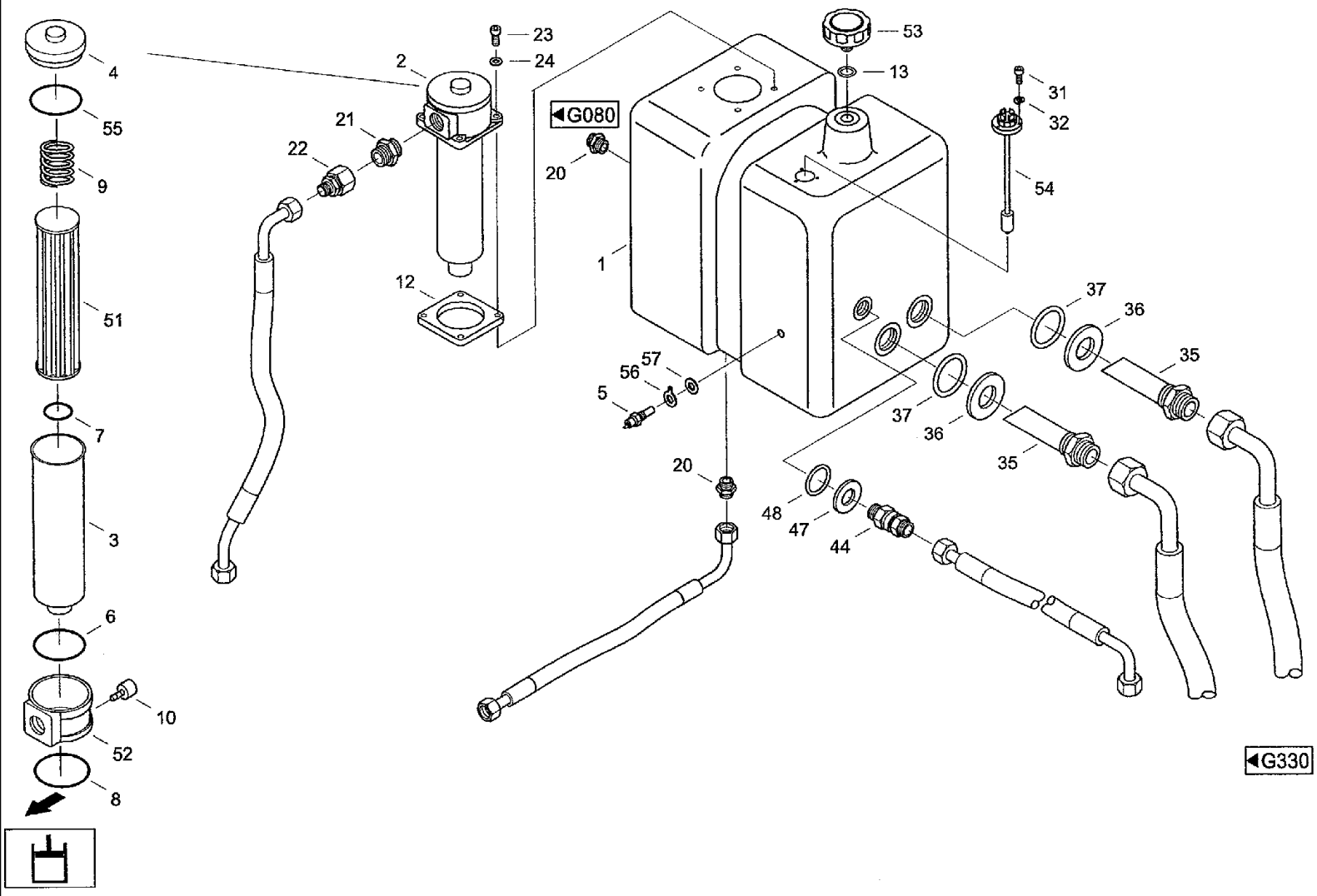

CF80 CASE IH CROSS FLOW COMBINE

G333(01) HYDRAULIC SYSTEM- OIL TANK

Ref	Part Number	Qty	Description
1	02886365	1	OIL RESERVOIR, Oil tank 528 POLY AMID 12
2	02898303	1	FILTER, Filter TEF310.10VG.16.S1.P. G.6.O
3	02898328	1	CUP, Cpl. filter bowl TEF310
4	060527062	1	COVER, Closure M90x2 B2 INTERNORMEN
5	060507813	1	THERMOSTAT, Temperature switch 85GRAD C B2 M14x1
6	01134530	1	O-RING, O-ring 75,00x3,00 6365 NBR 55 SHORE
7	01132762	1	O-RING, O-ring 40,00x3,00 6365 NBR 55 SHORE
8	060527087	1	O-RING, O-ring 88x3 B2
9	02898336	1	SPRING, Spring DA=52mm
10	060527095	1	INDICATOR, Contamination indicator E B2 INTERNORMEN-BES T.
12	072072182	1	GASKET, Seal TEF Г000-20.30.006 УПЛОТНЕНИЕ
13	01131296	1	O-RING, O-ring 22x5-NBR70 DIN3770
20	03433932	2	ADAPTER, Male connector GE18-LM-ED/OMD
21	03434925	1	ADAPTER, Male connector GE35-LR-ED/OMD
22	060522982	1	FITTING, G-fitting RED35/28-L/OMD
23	864-8035	4	SCREW, Hex Soc Hd, M8 x 35, 8.8, Cheese-head screw M8x35 DIN912 8.8
24	06577028	4	WASHER, SPECIAL, Locking washer M8
31	864-5025	3	SCREW, Hex Soc Hd, M5 x 25, 8.8, Cheese-head screw M5x25 DIN912 8.8
32	892-11005	3	WASHER, LOCK, M5, Spring washer A5 DIN 127 FST
35	072072100	2	RESTRICTOR, Suction pipe 42-L
36	072072190	2	SEAL, OIL, Seal ring 42-L Г000-20.30.002 КОЛЬЦО 42-L
37	060529851	2	O-RING, O-ring 63x5,3 DIN3771 NBR70
44	060522966	1	VALVE, CHECK, Valve check RHZ 28-LM-ED/OMD/
47	072072205	1	SEAL, OIL, Seal ring 28-L Г000-20.30.001 КОЛЬЦО 28-L
48	638-55450	1	O-RING, Cl 5, 45MM ID x 5.3 Thk, O-ring 45x5,3 DIN3771 NBR70

G333(02) HYDRAULIC SYSTEM- OIL TANK

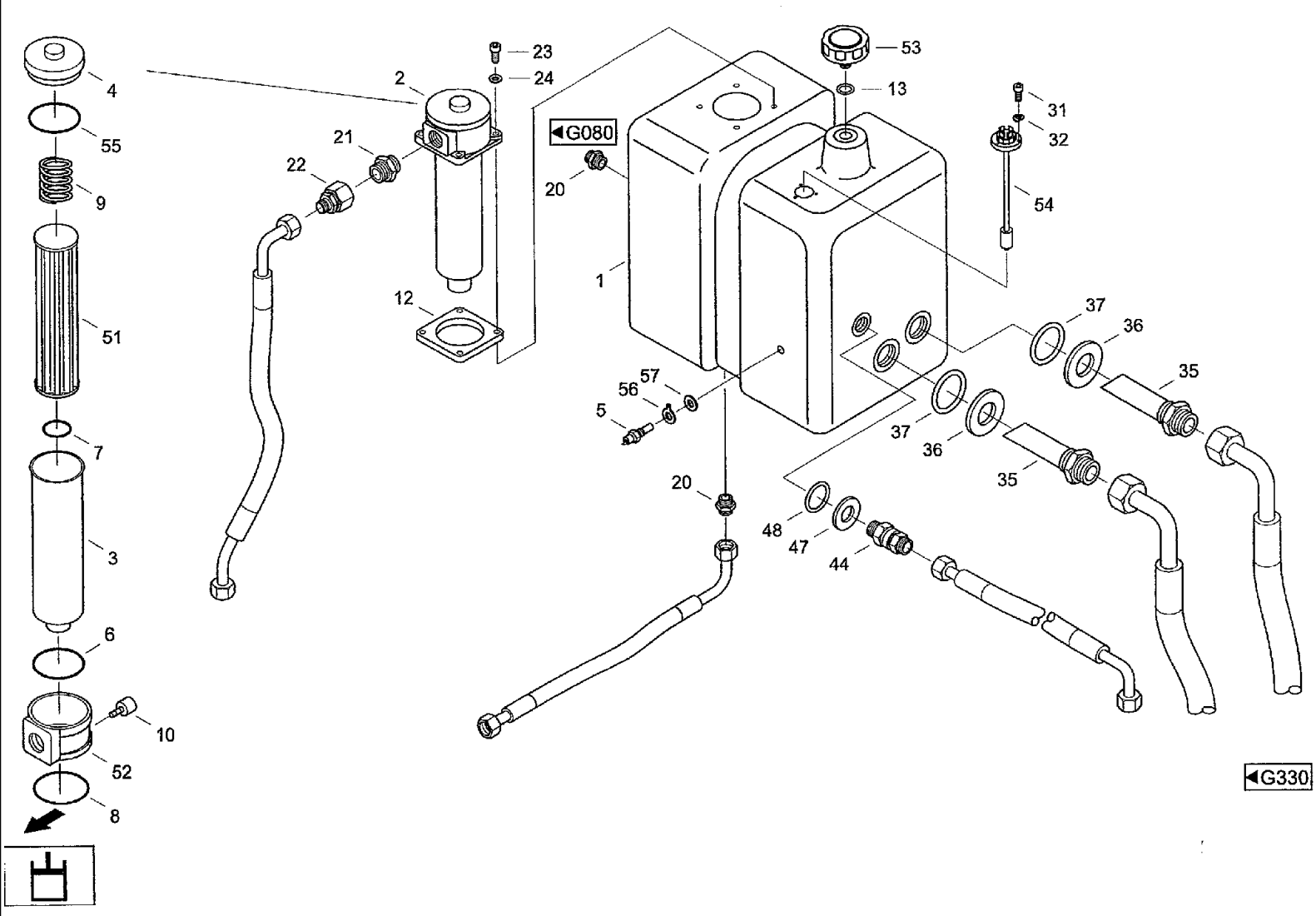

CF80 CASE IH CROSS FLOW COMBINE

G333(02) HYDRAULIC SYSTEM- OIL TANK

Ref	Part Number	Qty	Description
51	03105372	1	FILTER, ELEMENT, Filter element 320 BYP. 3.5 BAR
52	02898311	1	HEAD, Fuel filter head TEF310
53	072051780	1	FILTER, Ventilation fan TBF TBF.3/4.30972 .3 S P
54	07080961	1	GAUGE, ELECTRICAL, Float switch 249919
55	060527070	1	O-RING, O-ring 82x3 B2
56	061051687	1	CONNECTION, Earth connection
57	072072166	1	SEALRING, Flat seal

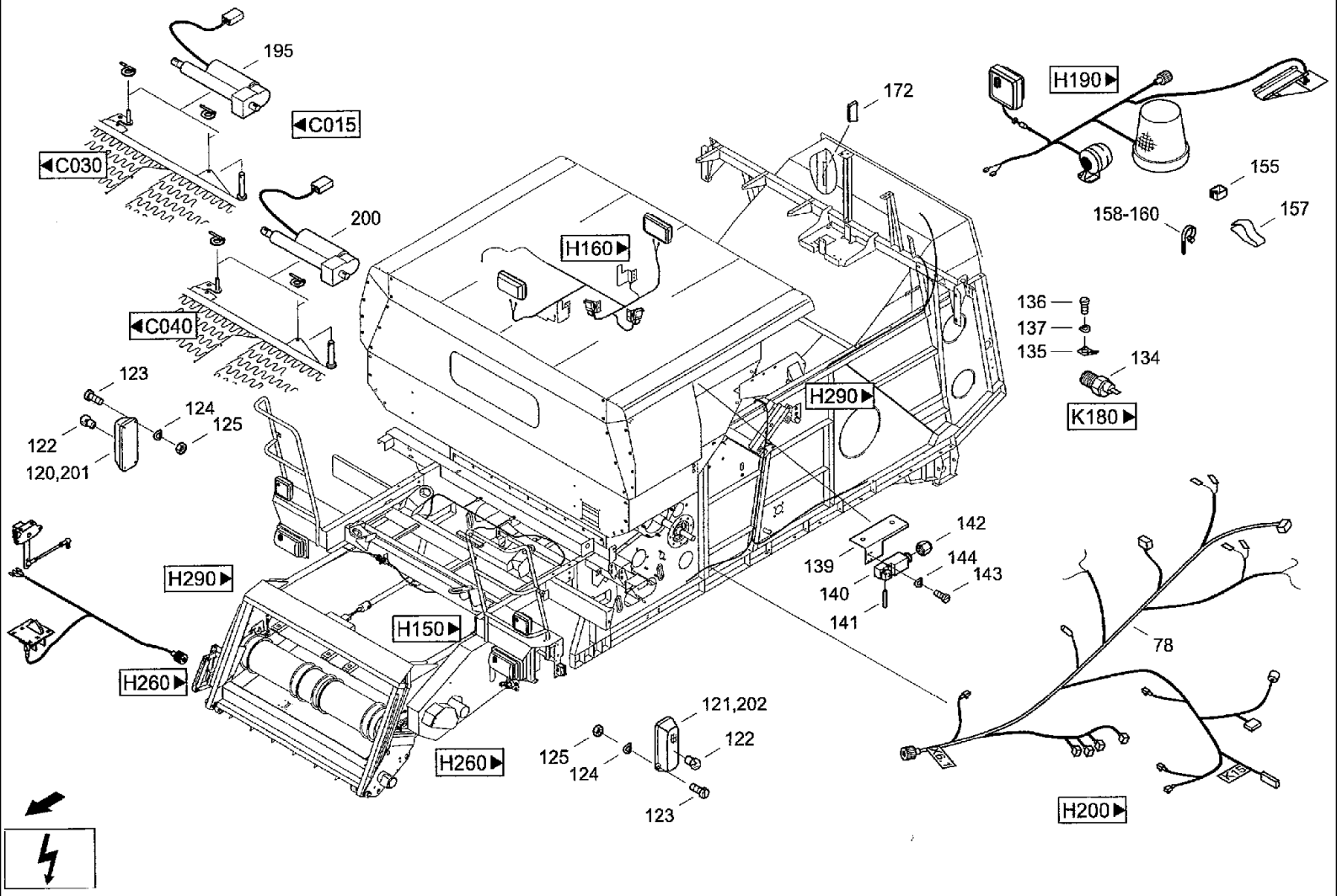
195
C015
C030
200
C040
123
124
125
122
120,201
H290
H150
H260
H160
172
H190
155
158-160
157
136
137
135
134
K180
H290
142
139
144
143
140
141
78
H200
121,202
122
125
124
123
H260

CF80 CASE IH CROSS FLOW COMBINE

H090(01) ELECTRICAL EQUIPMENT- COMBINE [CF80K]

Ref	Part Number	Qty	Description
76	07090930N1	1	HARNESS, Wiring loom r
77	07090947	1	HARNESS, Wiring loom m
78	07090955N1	1	HARNESS, Wiring loom l
79	07091023N1	1	HARNESS, Cable KORBVERSTELLUNG
80	31287934	1	SUPPORT, Holding plate X5
81	614-8016	2	BOLT, Hex, M8 x 16, 8.8,
82	06577028	2	WASHER, SPECIAL, Locking washer M8
84	06336037	8	SCREW, Hex bolt M3x12ISO40178.8
85	06501700	8	WASHER, SPRING, Wave washer spring B3 DIN 137 FST
86	061071272	2	PLATE, LARGE, Holding plate
112	06646066	1	Clamp body 430/30 PPH
113	060524910	1	COVER, Cover plate GD4D
114	814-8055	2	BOLT, Hex, M8 x 55, 8.8, Hex bolt M8x55 ISO4014 8.8
115	06647854	1	SHIN, Clamping halves Z-KP-5-G-32-32 DIN3015 PP
116	06647862	1	COVER, Cover plate Z-GD-5DIN3015W1
120	060505852	1	LIGHT, INDICATER, Flasher lamp r
121	060505860	1	LIGHT, INDICATER, Flasher lamp l
122	07002555	2	BULB, Filament lamp R5W-12VDIN72601
123	06008248	4	SCREW, Cheese-head screw M4x10DiN844.8
124	06501268	4	WASHER, SPRING, Wave washer spring B4DIN137FST
125	06267136	4	Hex nut M4 DIN985 8
134	07091265	1	CONTACT, Temperature switch 70GRAD
135	07078790	1	PIN, ELECT TERMINAL, Flat plug 6.3-TYP2 (DM5,2) DIN46244
136	06003942	1	Cheese-head screw M5x6 DIN84 4.8
137	06501315	1	WASHER, SPRING, Wave washer spring B5DIN137FST

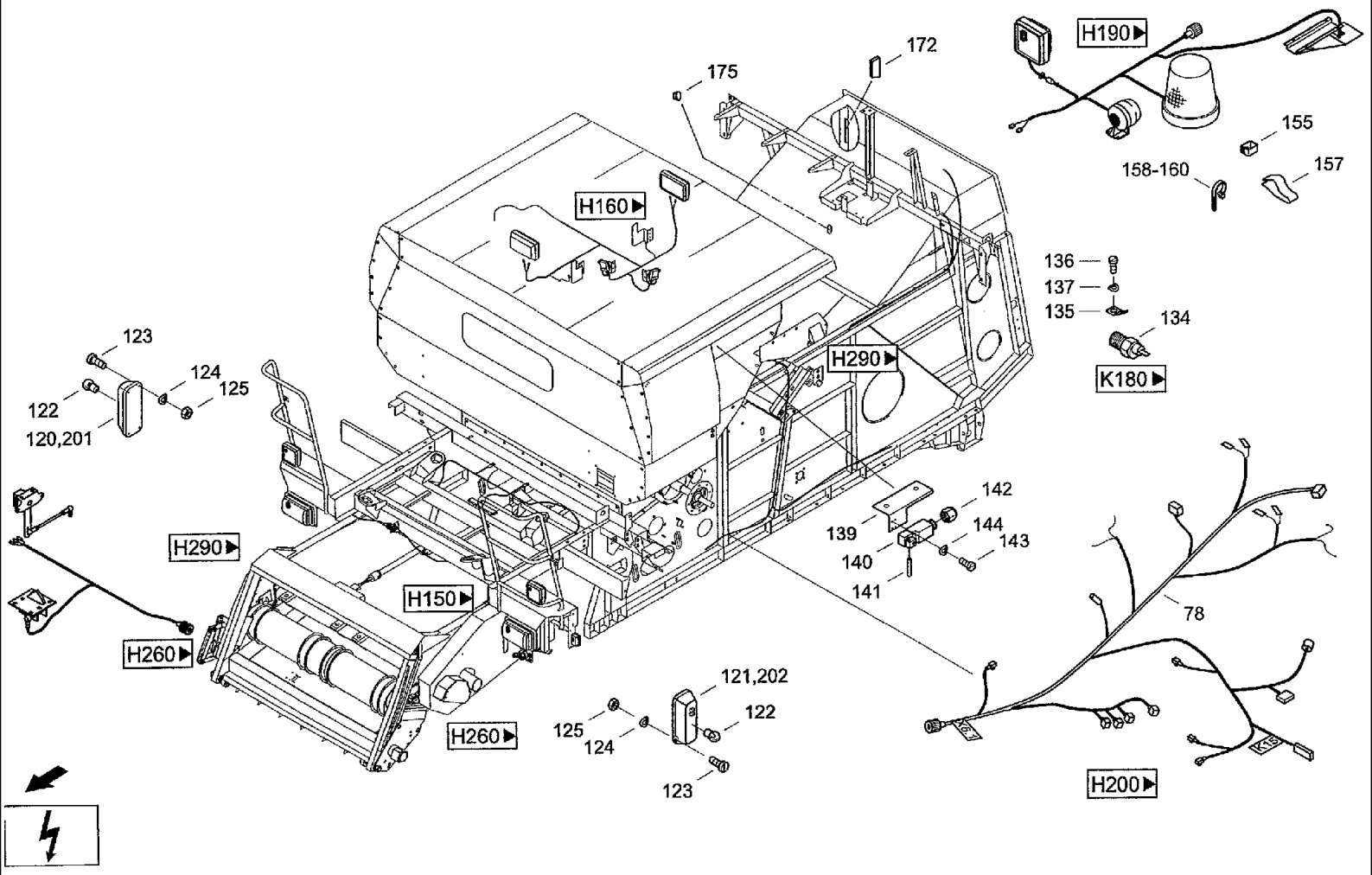
H190
172
175
155
158-160
157
H160
136
137
135
134
H290
K180
123
124
125
122
120,201
142
139
144
143
140
141
H290
H150
78
H260
121,202
125
122
124
H260
123
H200

CF80 CASE IH CROSS FLOW COMBINE

H090(02) ELECTRICAL EQUIPMENT- COMBINE [CF80Q/CF80P]

Ref	Part Number	Qty	Description
76	07090264	1	HARNESS, Wiring loom r
77	07090377	1	HARNESS, Wiring loom m
78	07090272	1	HARNESS, Wiring loom 1
80	31287934	1	SUPPORT, Holding plate x5
81	614-8016	2	BOLT, Hex, M8 x 16, 8.8,
82	06577028	2	WASHER, SPECIAL, Locking washer M8
84	06336037	8	SCREW, Hex bolt M3x12ISO40178.8
85	06501700	8	WASHER, SPRING, Wave washer spring B3DIN137FST
86	061071272	2	PLATE, LARGE, Holding plate
112	06646066	1	Clamp body 430/30 PPH
113	060524910	1	COVER, Cover plate GD4D
114	814-8055	2	BOLT, Hex, M8 x 55, 8.8, Hex bolt M8x55 ISO4014 8.8
115	06647854	1	SHIN, Clamping halves Z-KP-5-G-32-32 DIN3015 PP
116	06647862	1	COVER, Cover plate Z-GD-5 DIN3015 W1
120	060505852	1	LIGHT, INDICATER, Flasher lamp r
121	060505860	1	LIGHT, INDICATER, Flasher lamp l
122	07002555	2	BULB, Filament lamp R5W-12VDIN72601
123	06008248	4	SCREW, Cheese-head screw M4x10DIN844.8
124	06501268	4	WASHER, SPRING, Wave washer spring B4DIN137FST
125	06267136	4	Hex nut M4 DIN985 8
134	07091265	1	CONTACT, Temperature switch 70GRAD
135	07078790	1	PIN, ELECT TERMINAL, Flat plug 6.3-TYP2 (DM5,2) DIN46244
136	06003942	1	Cheese-head screw M5x6 DIN84 4.8
137	06501315	1	WASHER, SPRING, Wave washer spring B5DIN137FST
139	31291850	1	ANGLE BAR, Angle

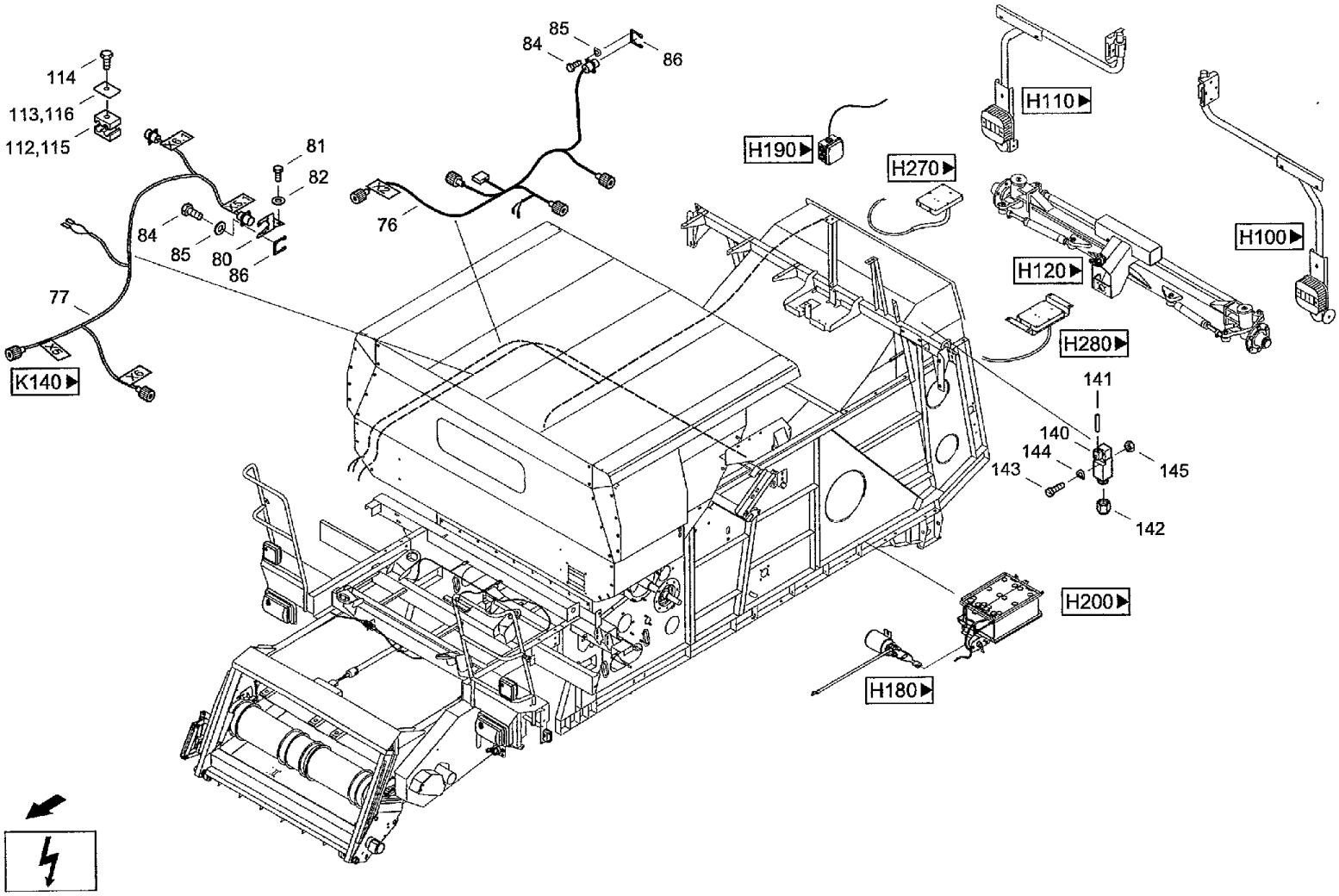
114
113,116
112,115
81
82
84
85
80
86
77
K140
84
85
86
76
H190
H270
H110
H100
H120
H280
141
140
144
143
145
142
H200
H180

CF80 CASE IH CROSS FLOW COMBINE

H090(03) ELECTRICAL EQUIPMENT- COMBINE [CF80Q/CF80P]

Ref	Part Number	Qty	Description
140	060519038	2	SENSOR, Switch PS05S02
141	060527343	2	LEVER, Lever DP7 20700
142	060519054	2	SCREW, Screwing VP13
143	06003805	4	SCREW, Cheese-head screw M4x25 DIN84 4.8
144	06501268	4	WASHER, SPRING, Wave washer spring B4 DIN 137 FST
145	825-1404	4	NUT, M4, Cl 8,
155	07067064	34	Cable strap ACC38-A-20
157	06708513	4	Clip 36 A3C
158	07070043	40	CABLE, Cable band 250x4,8 TSL-250-S
159	07078782	10	CLIP, Cable band F.SCHWEISSBOLZEN
160	07081167	82	CLIP, Cable band PRST30S-S14-30
172	060203487	1	GASKET, Seal l
175	31352204	2	PLUG, Plug CS085
201	060505877	1	DISC, Pane r
202	060505885	1	DISC, Pane l

H100 ELECTRICAL EQUIPMENT- LAMP HOLDER, LEFT

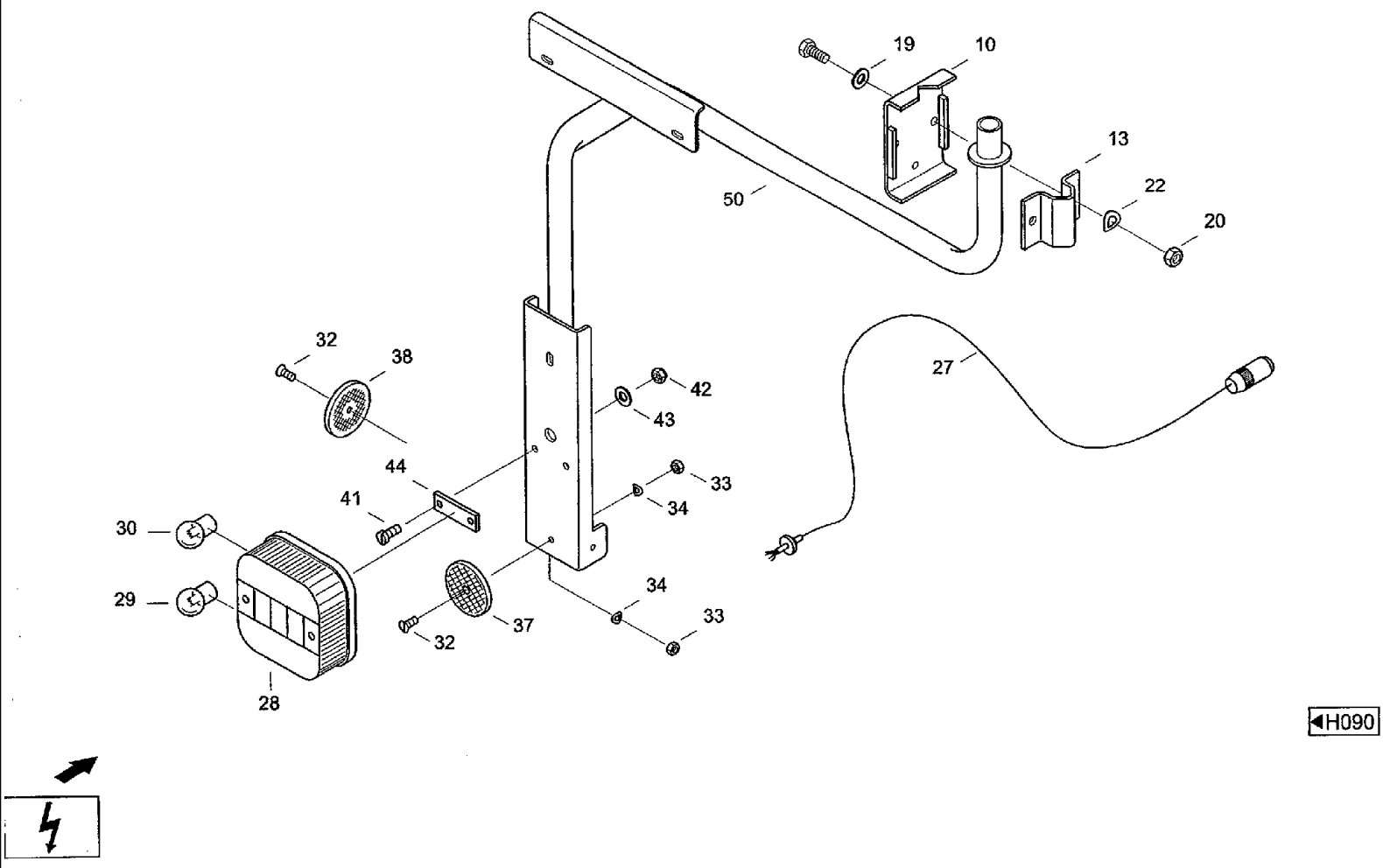

CF80 CASE IH CROSS FLOW COMBINE

H100 ELECTRICAL EQUIPMENT- LAMP HOLDER, LEFT

Ref	Part Number	Qty	Description
10	060182825	1	RETAINER, Support 525-52910:009/03 ДЕРЖАТЕЛЬ
13	060061817	1	BOW, Bracket 524-52910:011 СКОБА
19	895-11008	2	WASHER, M8 x 16 x 1.6, Washer 8,4 DIN125 ST
20	825-1408	2	NUT, M8, Cl 8,
22	06501380	2	WASHER, CUP, Wave washer spring B8DIN137FST
27	07080744	1	HARNESS, Cable l, RUCKLEUCHTE
28	060509864	1	LIGHT, TAIL, Combined tail lamp LEUCHTE
29	07024794	2	BULB, Filament lamp P21W-12V DIN72601
30	07067683	1	BULB, Filament lamp R10W-12VVPE10STK DIN72601
32	06070390	2	SCREW, Countersunk screw M5x16 DIN963 4.8
33	825-1405	2	NUT, M5, Cl 8, Hex nut M5 ISO4032 8
34	06501315	2	WASHER, SPRING, Wave washer spring B5DIN137FST
37	03790500	1	Reflector RUND 60DURCHM. ROT
38	04022512	1	Reflector RUND 60DURCHM. GELB BESNR.
41	840-3620	2	SCREW, Sltd Pan Hd, M6 x 20, Lens-head screw M6x20 DIN85 4.8
42	832-10406	2	NUT, M6 x 1, Cl 8, Hex nut M6 DIN982 8
43	895-11006	2	WASHER, M6, Washer 6,4 DIN 125 ST
44	060169434	1	PAD, RUBBER, Rubber pad
50	061051404	1	SUPPORT, Lamp holder H100-02.11.000 КРОНШТЕЙН ФАРЫ Л.

H102 ELECTRICAL EQUIPMENT- LAMP HOLDER, LEFT, STRAW CHOPPER

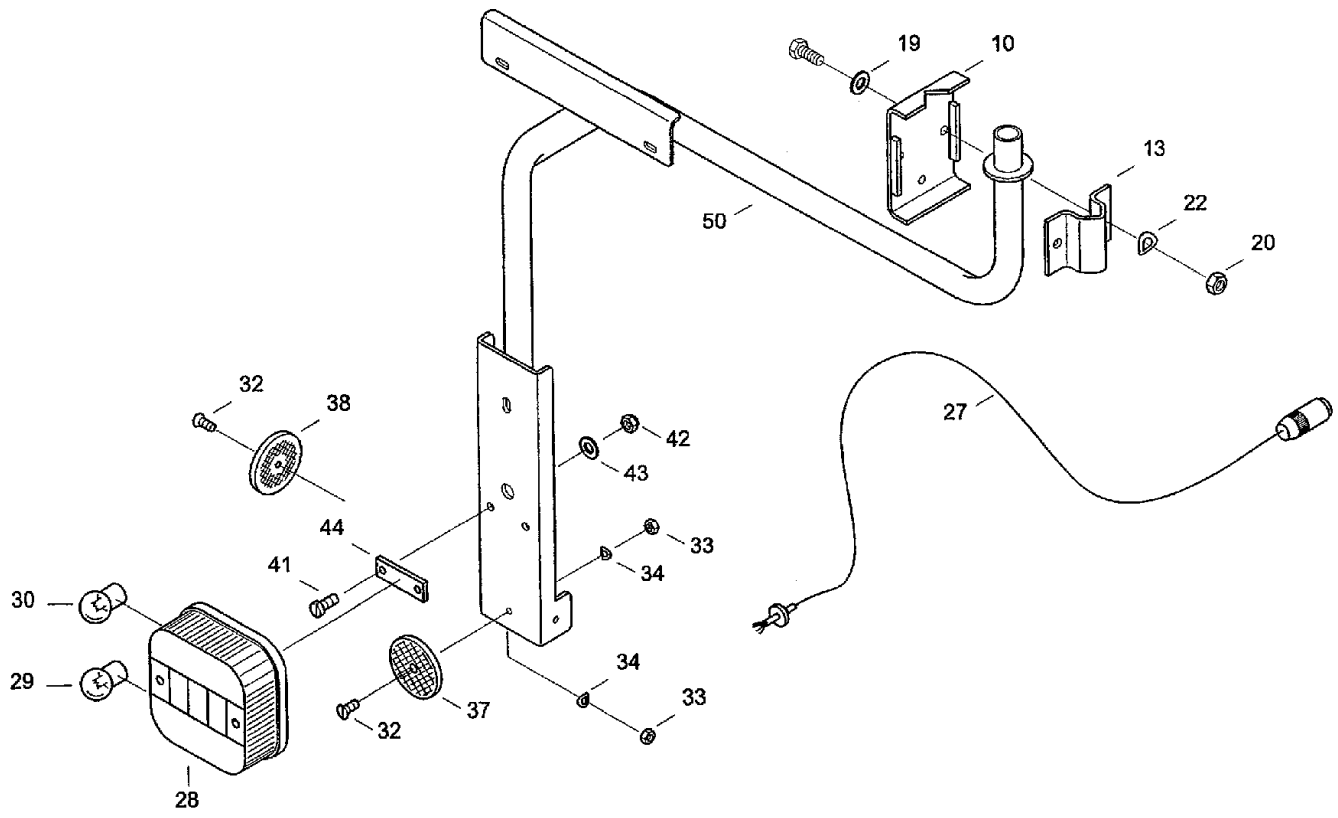

◄H090

CF80 CASE IH CROSS FLOW COMBINE

H102 ELECTRICAL EQUIPMENT- LAMP HOLDER, LEFT, STRAW CHOPPER

Ref	Part Number	Qty	Description
10	060182825	1	RETAINER, Support
13	060061817	1	BOW, Bracket
19	895-11008	2	WASHER, M8 x 16 x 1.6, Washer 8,4 DIN125 ST
20	825-1408	2	NUT, M8, Cl 8,
22	06501380	2	WASHER, CUP, Wave washer spring B8 DIN 137 FST
27	07080744	1	HARNESS, Cable I, RUCKLEUCHTE
28	060509864	1	LIGHT, TAIL, Combined tail lamp LEUCHTE
29	07024794	2	BULB, Filament lamp P21W-12VDIN72601
30	07067683	1	BULB, Filament lamp R10W-12V VPE10STK DIN72601
32	06070390	2	SCREW, Countersunk screw M5x16DIN9634.8
33	825-1405	2	NUT, M5, Cl 8, Hex nut M5 ISO4032 8
34	06501315	2	WASHER, SPRING, Wave washer spring B5DIN137FST
37	03790500	1	Reflector RUND 60DURCHM. ROT
38	04022512	1	Reflector RUND 60DURCHM. GELB BESNR.
41	840-3620	2	SCREW, Sltd Pan Hd, M6 x 20, Lens-head screw M6x20DIN854.8
42	832-10406	2	NUT, M6 x 1, Cl 8, Hex nut M6 DIN982 8
43	895-11006	2	WASHER, M6, Washer 6.4DIN125ST
44	060169434	1	PAD, RUBBER, Rubber pad
50	31308305	1	SUPPORT, Lamp holder

H110 ELECTRICAL EQUIPMENT- LAMP HOLDER, RIGHT

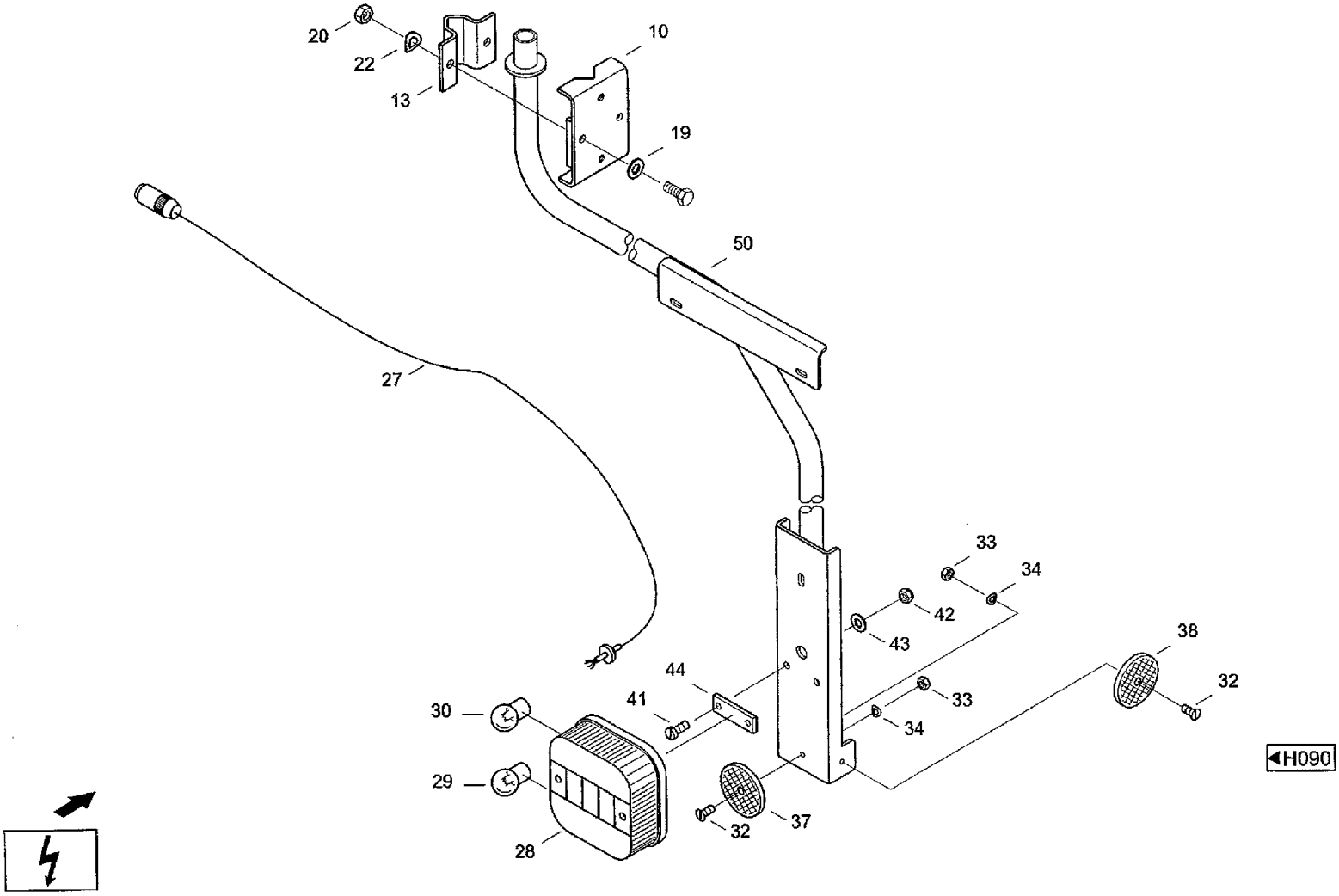

CF80 CASE IH CROSS FLOW COMBINE

H110 ELECTRICAL EQUIPMENT- LAMP HOLDER, RIGHT

Ref	Part Number	Qty	Description
10	060182825	2	RETAINER, Support
13	060061817	2	BOW, Bracket
19	895-11008	4	WASHER, M8 x 16 x 1.6, Washer 8,4 DIN 125 ST
20	825-1408	4	NUT, M8, Cl 8,
22	06501380	4	WASHER, CUP, Wave washer spring B8 DIN 137 FST
27	07080744	2	HARNESS, Cable I, ROCKLEUCHTE
28	060509864	2	LIGHT, TAIL, Combined tail lamp LEUCHTE
29	07024794	4	BULB, Filament lamp P21W-12VDIN72601
30	07067683	2	BULB, Filament lamp R10W-12V VPE10STK DIN72601
32	06070390	4	SCREW, Countersunk screw M5x16 DIN963 4.8
33	825-1405	4	NUT, M5, Cl 8, Hex nut M5 ISO4032 8
34	06501315	4	WASHER, SPRING, Wave washer spring B5 DIN 137 FST
37	03790500	2	Reflector RUND 60DURCHM. ROT
38	04022512	2	Reflector RUND 60DURCHM. GELB BESNR.
41	840-3620	4	SCREW, Sltd Pan Hd, M6 x 20, Lens-head screw M6x20 DIN85 4.8
42	832-10406	4	NUT, M6 x 1, Cl 8, Hex nut M6 DIN982 8
43	895-11006	4	WASHER, M6, Washer 6.4DIN125ST
44	060169434	2	PAD, RUBBER, Rubber pad
50	061051437	2	SUPPORT, Lamp holder

525-52911:100 КРОНШТЕЙН ФАРЫ ПР.

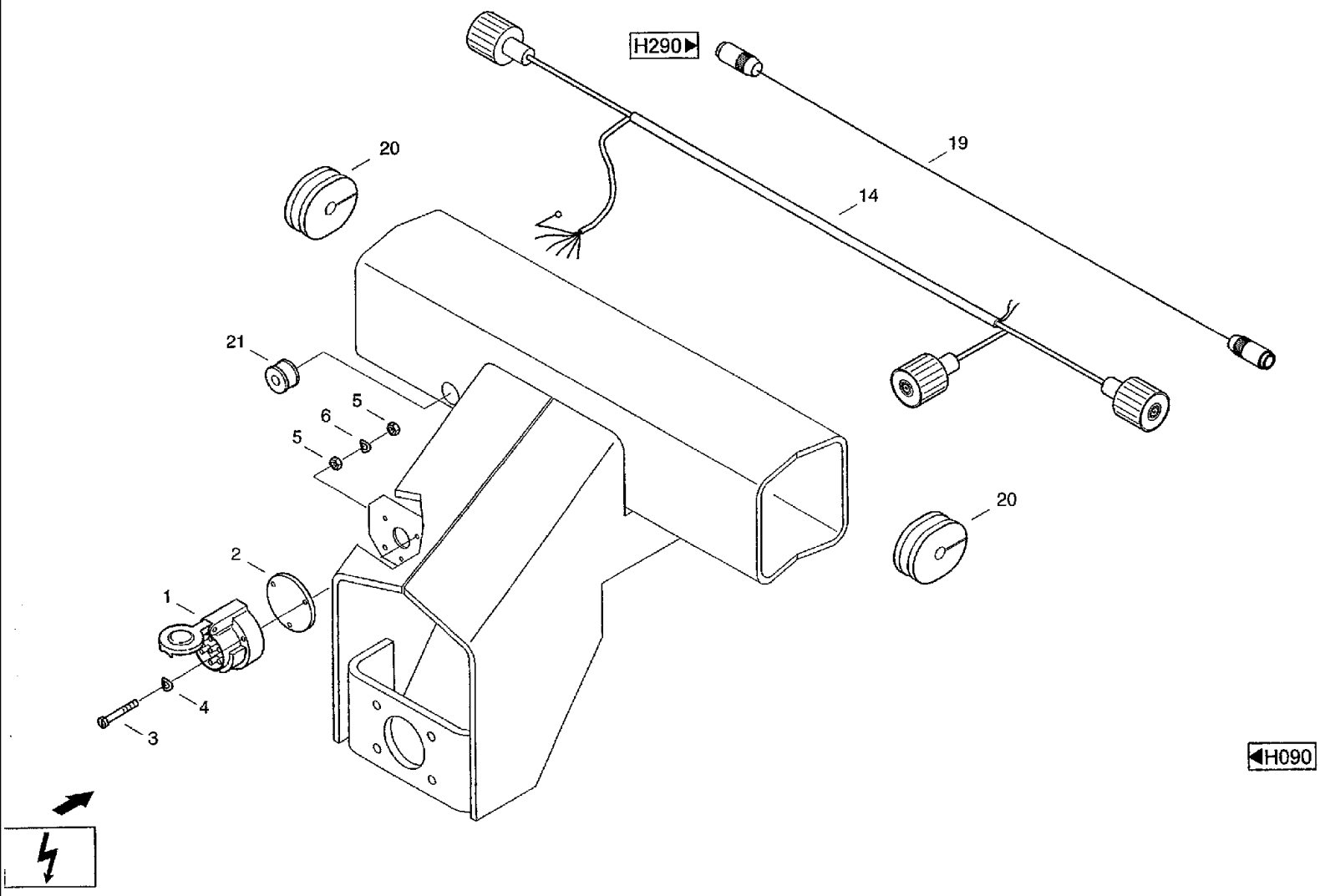
H290
20
19
14
21
5
6
5
20
2
1
4
3
H090

CF80 CASE IH CROSS FLOW COMBINE

H120 ELECTRICAL EQUIPMENT- STEERING AXLE CARRIER

Ref	Part Number	Qty	Description
1	07067048	1	Socket 7POLIG
2	01150916	1	DUST CAP, Socket plate 8820.5/6
3	06006326	3	SCREW, Cheese-head screw M5x35 DIN84 4.8
4	06501315	3	WASHER, SPRING, Wave washer spring B5 DIN137 FST
5	825-1406	2	NUT, M6, Cl 8,
6	06501397	1	WASHER, SPRING, Wave washer spring B6DIN137FST
14	31340893	1	CABLE, ELECTRIC, Cable LENKACHSTRAGER
19	07080785	1	HARNESS, Connecting cable RK4.4T-2.6-RS4.4T
20	061027236	2	GROMMET, Locking
21	060526383	1	GROMMET, Grommet 15x22x8 (ART.-NR. 294533)

H130 ELECTRICAL EQUIPMENT- LAMP UNIT, LEFT

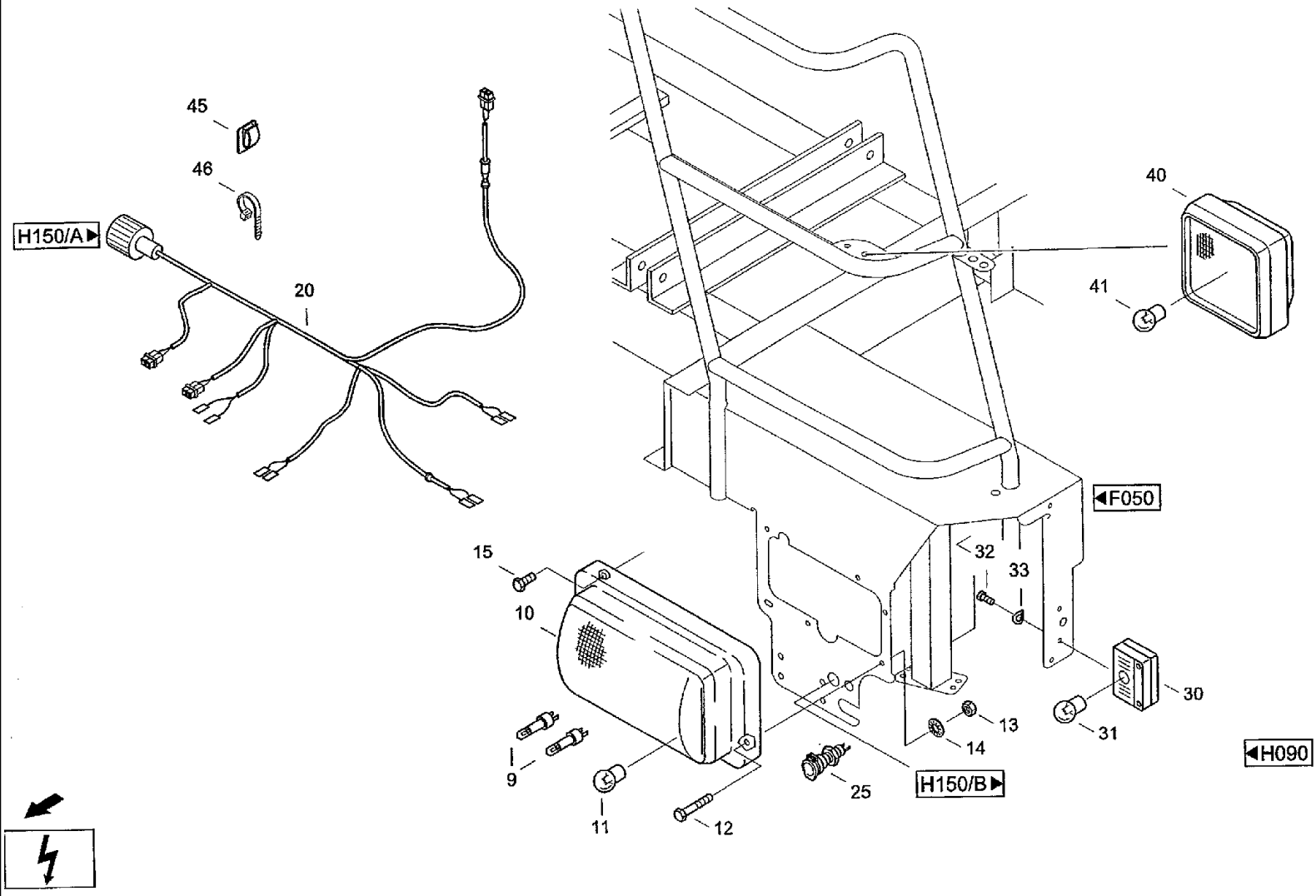

CF80 CASE IH CROSS FLOW COMBINE

H130 ELECTRICAL EQUIPMENT- LAMP UNIT, LEFT

Ref	Part Number	Qty	Description
9	07090110	2	BULB, Filament lamp H1-55W-12V DIN72601
10	07090498	1	SPOTLIGHT, Main build-up headlight l
11	07002530	1	BULB, Filament lamp T4W-12VDIN72601
12	614-6014	5	BOLT, Hex, M6 x 14, 8.8, Full Thd, Hex bolt M6x14ISO40178.8
13	825-1406	6	NUT, M6, Cl 8,
14	06577036	6	WASHER, SPECIAL, Locking washer M6
15	614-6040	1	BOLT, Hex, M6 x 40, 8.8, Full Thd, Hex, M6 x 40, 8.8, Full Thd, ISO4017
20	07078661	1	HARNESS, Cable l, LAMPENEINHEIT
25	07090883	1	PIN, ELECT TERMINAL, Socket 2-POLIG
30	07081087	1	LAMP, Contour lihghtumrissleuchte
31	07002530	1	BULB, Filament lamp T4W-12VDIN72601
32	06007698	2	SCREW, Cheese-head screw M4X16DIN844.8
33	06501268	2	WASHER, SPRING, Wave washer spring B4DIN137FST
40	060531516	1	LIGHT, WORK, Work light
41	07034997	1	BULB, Filament lamp H3-55W-12VDIN72601
45	07067064	5	Cable strap ACC38-A-20
46	060152467	5	CABLE, Cable band PLT-2S-M30 87113054.8X188 MM

H140 ELECTRICAL EQUIPMENT- LAMP UNIT, RIGHT

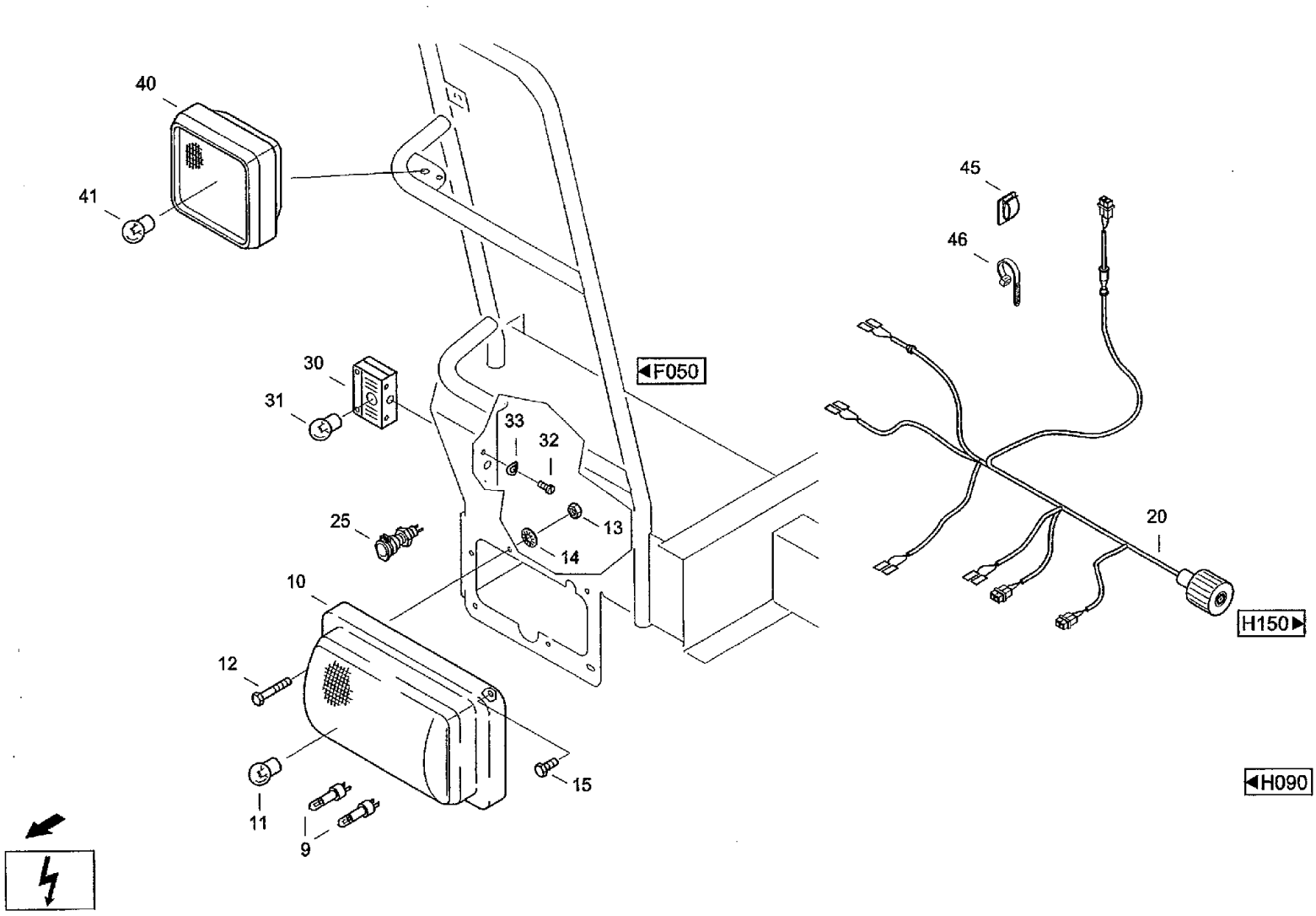

CF80 CASE IH CROSS FLOW COMBINE

H140 ELECTRICAL EQUIPMENT- LAMP UNIT, RIGHT

Ref	Part Number	Qty	Description
9	07090110	2	BULB, Filament lamp H1-55W-12VDIN72601
10	07090504	1	SPOTLIGHT, Main build-up headlight r
11	07002530	1	BULB, Filament lamp T4W-12VDIN72601
12	614-6014	5	BOLT, Hex, M6 x 14, 8.8, Full Thd, Hex bolt M6X14ISO40178.8
13	825-1406	6	NUT, M6, Cl 8,
14	06577036	6	WASHER, SPECIAL, Locking washer M6
15	614-6040	1	BOLT, Hex, M6 x 40, 8.8, Full Thd, Hex, M6 x 40, 8.8, Full Thd, ISO4017
20	061075854	1	HARNESS, Cable r, LAMPENEINHEIT
25	07090883	1	PIN, ELECT TERMINAL, Socket 2-POLIG
30	07081087	1	LAMP, Contour lihghtumrissleuchte
31	07002530	1	BULB, Filament lamp T4W-12VDIN72601
32	06007698	2	SCREW, Cheese-head screw M4x16 DIN84 4.8
33	06501268	2	WASHER, SPRING, Wave washer spring B4 DIN137 FST
40	060531516	1	LIGHT, WORK, Work light
41	07034997	1	BULB, Filament lamp H3-55W-12VDIN72601
45	07067064	5	Cable strap ACC38-A-20
46	060152467	5	CABLE, Cable band PLT-2S-M30 8711305 4.8X188 MM

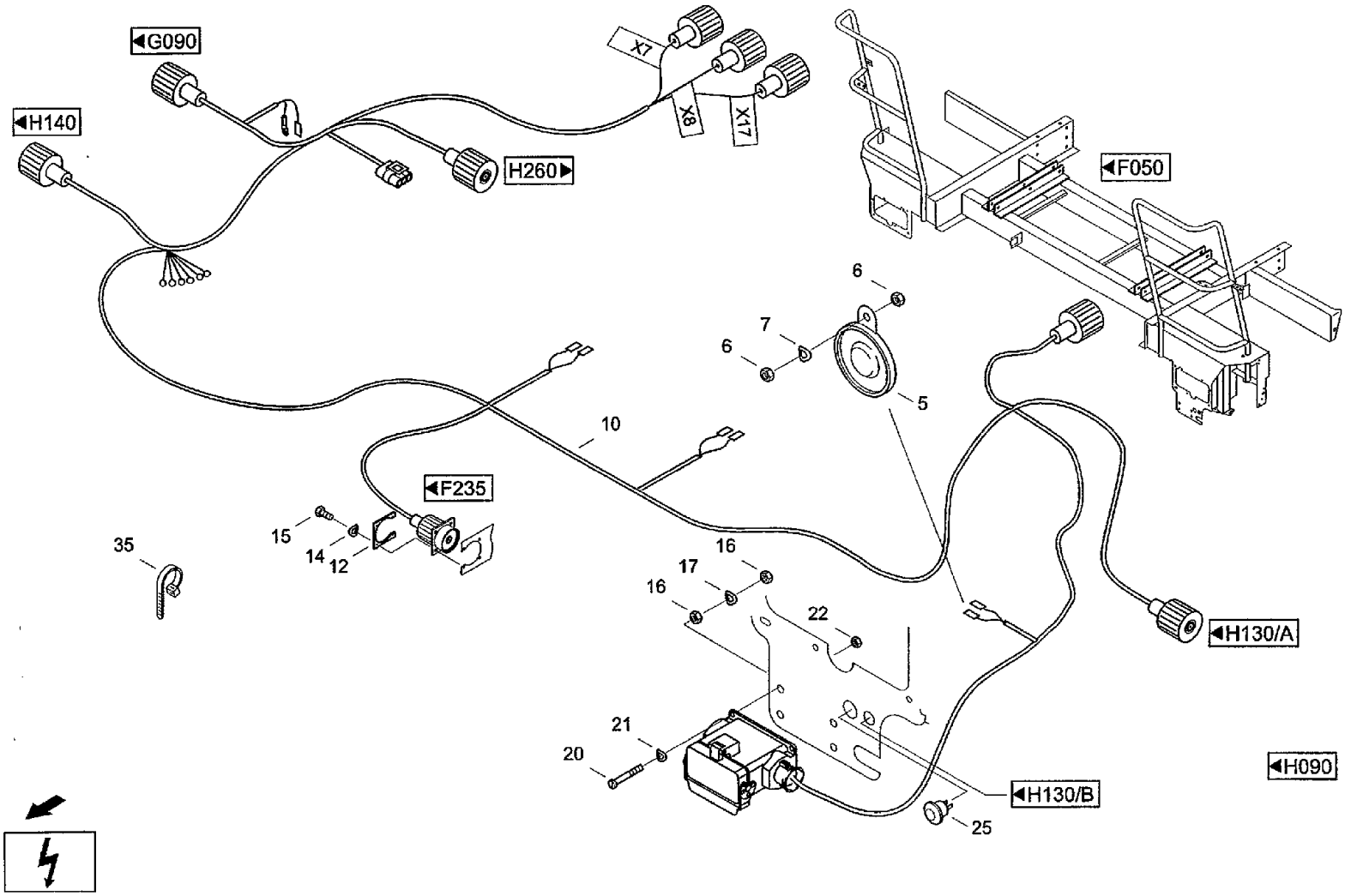
G090
H140
H260
X7
X8
X17
F050
6
7
6
5
10
F235
15
14
12
35
16
17
16
22
H130/A
21
20
H130/B
H090
25

CF80 CASE IH CROSS FLOW COMBINE

H150(01) ELECTRICAL EQUIPMENT- PLATFORM [CF80K]

Ref	Part Number	Qty	Description
5	07004227	1	BUZZER, Horn 1211290101
6	06501428	1	WASHER, SPRING, Wave washer spring B10DIN137FST
7	825-1410	2	NUT, M10, Cl 8,
10	07091015N1	1	HARNESS, Cable PLATTFORM
12	061071272	1	PLATE, LARGE, Holding plate
14	06501700	8	WASHER, SPRING, Wave washer spring B3DIN137FST
15	06336037	8	SCREW, Hex bolt M3x12 ISO40178.8
16	825-1406	2	NUT, M6, Cl 8,
17	06501397	1	WASHER, SPRING, Wave washer spring B6DIN137FST
20	06334582	4	SCREW, Hex bolt M5X14ISO40178.8
21	06501315	4	WASHER, SPRING, Wave washer spring B5DIN137FST
22	03292381	4	SCREW, Hex nut M5 DIN985 8
25	060509204	1	SWITCH, Switch
35	07081167	15	CLIP, Cable band PRST30S-S14-30

H150(02) ELECTRICAL EQUIPMENT- PLATFORM [CF80P]

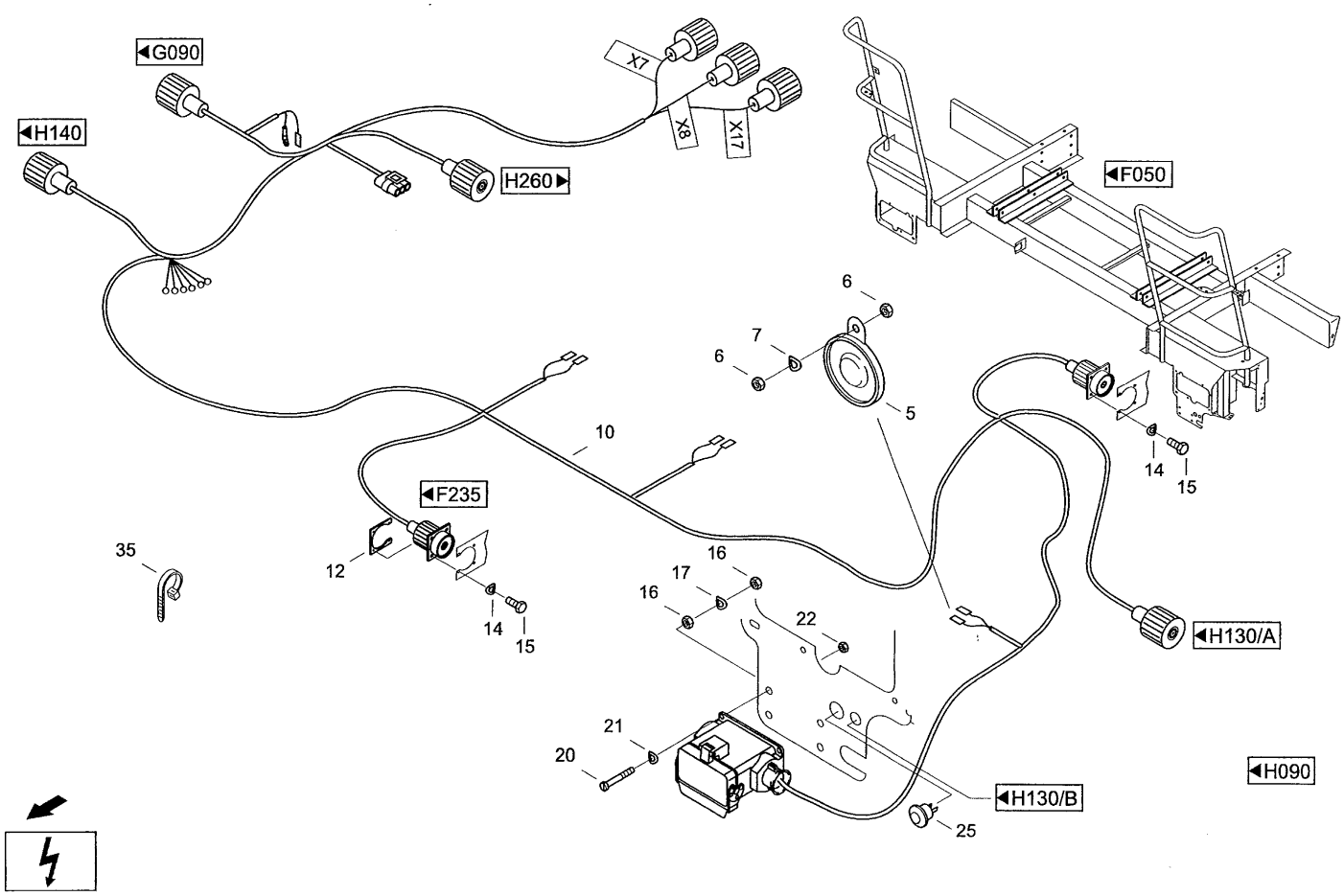

CF80 CASE IH CROSS FLOW COMBINE

H150(02) ELECTRICAL EQUIPMENT- PLATFORM [CF80P]

Ref	Part Number	Qty	Description
5	07004227	1	BUZZER, Horn 1211290101
6	06501428	1	WASHER, SPRING, Wave washer spring B10DIN137FST
7	825-1410	2	NUT, M10, Cl 8,
10	07090280	1	HARNESS, Cable PLATTFORM
12	061071272	1	PLATE, LARGE, Holding plate
14	06501700	8	WASHER, SPRING, Wave washer spring B3DIN137FST
15	06336037	8	SCREW, Hex bolt M3x12 IS04017 8.8
16	825-1406	2	NUT, M6, Cl 8,
17	06501397	1	WASHER, SPRING, Wave washer spring B6 DIN137 FST
20	06334582	4	SCREW, Hex bolt M5x14 ISO4017 8.8
21	06501315	4	WASHER, SPRING, Wave washer spring B5 DIN 137 FST
22	03292381	4	SCREW, Hex nut M5 DIN985 8
25	060509204	1	SWITCH, Switch
35	07081167	23	CLIP, Cable band PRST30S-S14-30

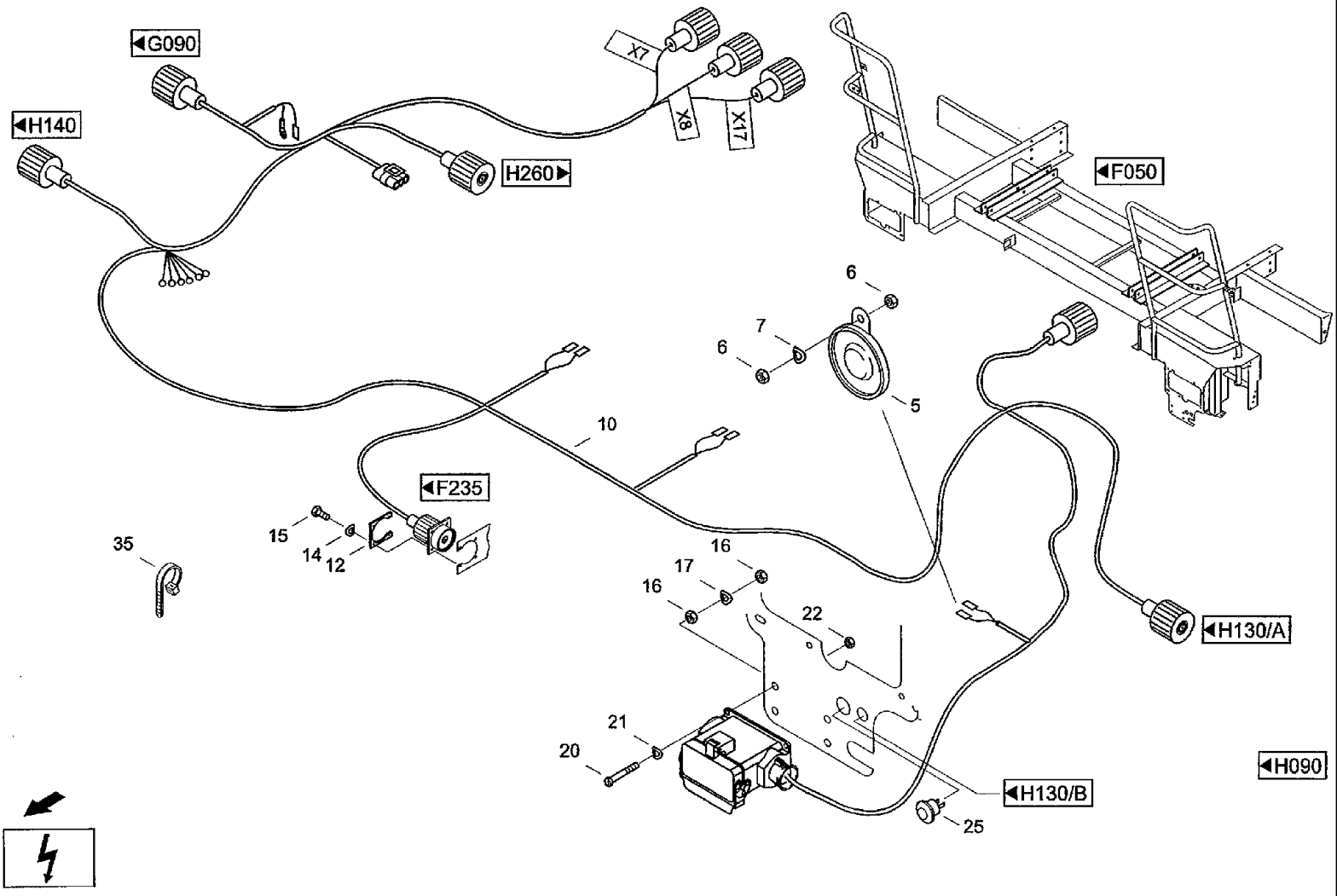
G090
H140
H260
X7
X8
X17
F050
6
7
6
5
10
F235
15
14
12
35
16
17
16
22
H130/A
21
20
H130/B
25
H090

CF80 CASE IH CROSS FLOW COMBINE

H150(03) ELECTRICAL EQUIPMENT- PLATFORM [CF80Q]

Ref	Part Number	Qty	Description
5	07004227	1	BUZZER, Horn 1211290101
6	06501428	1	WASHER, SPRING, Wave washer spring B10DIN137FST
7	825-1410	2	NUT, M10, Cl 8,
10	07090561	1	HARNESS, Cable PLATTFORM
12	061071272	1	PLATE, LARGE, Holding plate
14	06501700	8	WASHER, SPRING, Wave washer spring B3DIN137FST
15	06336037	8	SCREW, Hex bolt M3x12ISO40178.8
16	825-1406	2	NUT, M6, Cl 8,
17	06501397	1	WASHER, SPRING, Wave washer spring B6DIN137FST
20	06334582	4	SCREW, Hex bolt M5x14ISO40178.8
21	06501315	4	WASHER, SPRING, Wave washer spring B5 DIN137 FST
22	03292381	4	SCREW, Hex nut M5 DIN985 8
25	060509204	1	SWITCH, Switch
35	07081167	15	CLIP, Cable band PRST30S-S14-30

H160(01) ELECTRICAL EQUIPMENT- GRAIN TANK

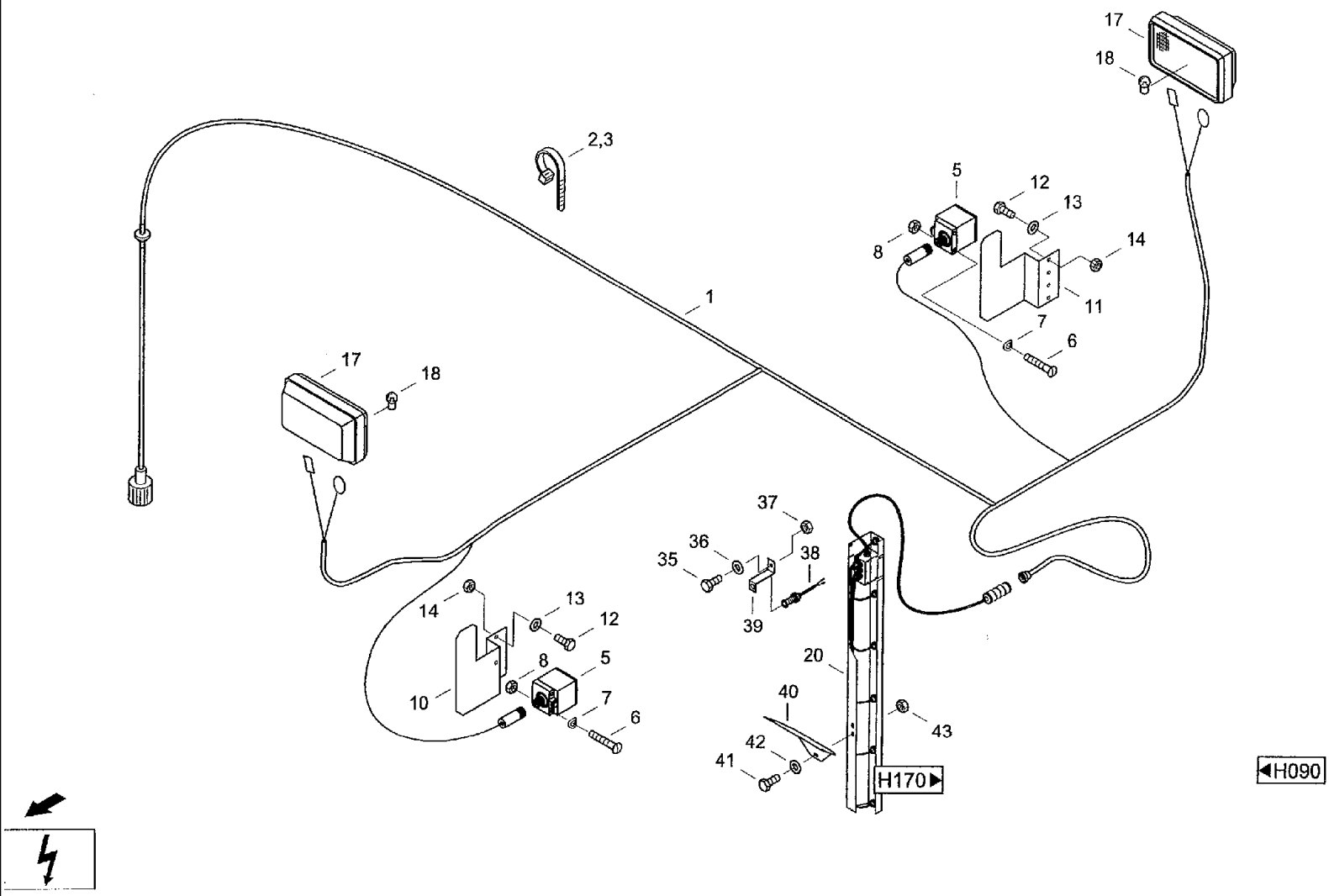

CF80 CASE IH CROSS FLOW COMBINE

H160(01) ELECTRICAL EQUIPMENT- GRAIN TANK

Ref	Part Number	Qty	Description
7	614-8016	4	BOLT, Hex, M8 x 16, 8.8,
8	06501380	4	WASHER, CUP, Wave washer spring B8DIN137FST
9	825-1408	4	NUT, M8, Cl 8,
10	07091240	1	HARNESS, Cable KORNTANK
11	060152467	2	CABLE, Cable band PLT-2S-M30 8711305 4.8X188 MM
12	07081167	40	CLIP, Cable band PRST30S-S14-30
13	07067064	2	Cable strap ACC38-A-20
15	060508646	2	SWITCH, Sender BI15U-CK40-AN4x2-H1141
16	03020351	4	SCREW, Raised countersunk head screw M5x50-H DIN966 5.8
17	06501315	4	WASHER, SPRING, Wave washer spring B5DIN137FST
18	825-1405	4	NUT, M5, Cl 8, Hex nut M5 ISO4032 8
20	061028157	1	SHEET, Sheet iron l
21	061028165	1	SHEET, Sheet iron r
22	614-6014	4	BOLT, Hex, M6 x 14, 8.8, Full Thd, Hex bolt M6x14ISO40178.8
23	06577036	4	WASHER, SPECIAL, Locking washer M6
24	825-1406	4	NUT, M6, Cl 8,
42	07091216	2	HEADLIGHT, Backing up lamp
43	07024987	2	BULB, Filament lamp P21W-24V/21W-BA15S DIN72601

H160(02) ELECTRICAL EQUIPMENT- GRAIN TANK [CF80K]

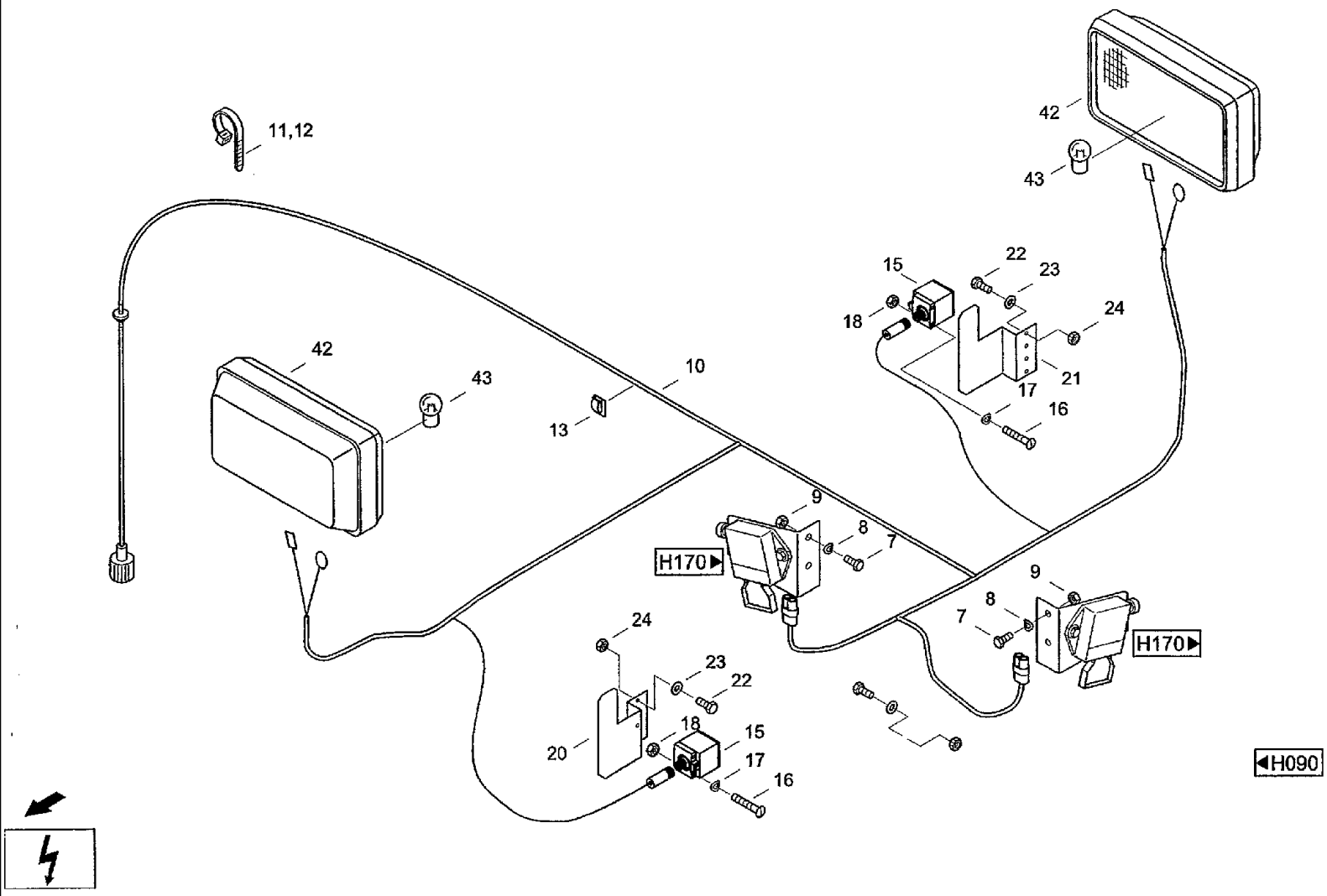

CF80 CASE IH CROSS FLOW COMBINE

H160(02) ELECTRICAL EQUIPMENT- GRAIN TANK [CF80K]

Ref	Part Number	Qty	Description
1	07091007N1	1	HARNESS, Cable KORNTANK
2	060152467	2	CABLE, Cable band PLT-2S-M30 87113054.8X188 MM
3	07081167	40	CLIP, Cable band PRST30S-S14-30
5	060508646	2	SWITCH, Sensor BI15U-CK40-AN4x2- H1141
6	03020351	4	SCREW, Raised countersunk head screw M5x50-H DIN966 5.8
7	06501315	4	WASHER, SPRING, Wave washer spring B5 DIN137 FST
8	825-1405	4	NUT, M5, Cl 8, Hex nut M5 ISO4032 8
10	061028157	1	SHEET, Sheet iron l
11	061028165	1	SHEET, Sheet iron r
12	614-6014	4	BOLT, Hex, M6 x 14, 8.8, Full Thd, Hex bolt M6x14 ISO4017 8.8
13	06577036	4	WASHER, SPECIAL, Locking washer M6
14	825-1406	4	NUT, M6, Cl 8,
17	061010051	2	HEADLIGHT, Back-up light
18	07024987	2	BULB, Filament lamp P21W-24V/21W-BA15S DIN72601
20	31321142	1	SENSOR, Sender KORNTANK
35	627-10025	1	BOLT, Hex, M10 x 25, 10.9, Full Thd, Hex bolt M10x25ISO401710.9
36	06577003	1	WASHER, SPECIAL, Locking washer M10
37	829-1410	1	NUT, M10, Cl 10, Hex nut M10 ISO4032 10
38	060529667	1	SENSOR, Sensor KAPAZIT. BC5-S 1 8-AN4x
39	31321167	1	HOLDER, Support F.SENSOR
40	31320994	1	HOLDER, Support F.GEBER KORNTANK
41	614-8020	2	BOLT, Hex, M8 x 20, 8.8, Hex bolt M8x20ISO40178.8
42	06577028	2	WASHER, SPECIAL, Locking washer M8
43	825-1408	2	NUT, M8, Cl 8,

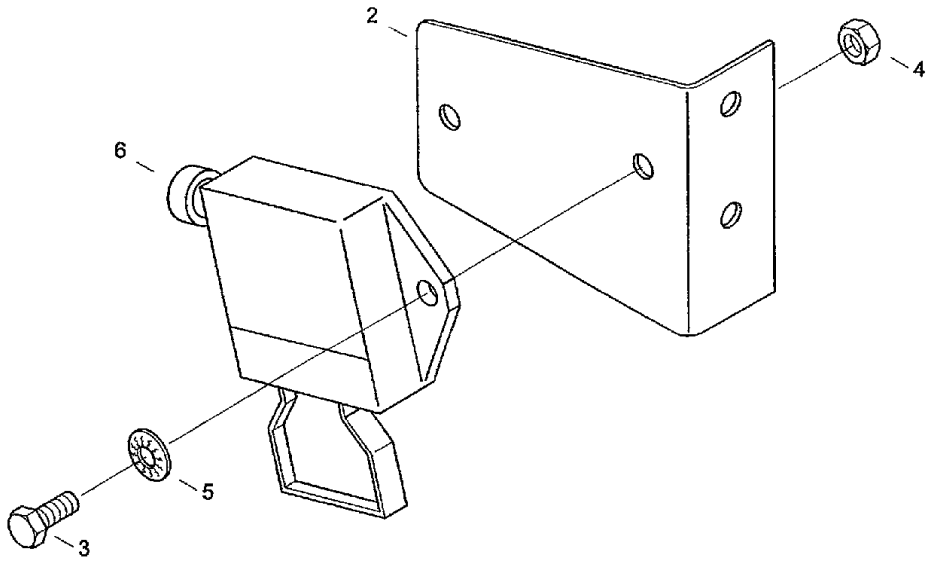

H160

CF80 CASE IH CROSS FLOW COMBINE

H170(01) ELECTRICAL EQUIPMENT- SENDER, GRAIN TANK

Ref	Part Number	Qty	Description
2	061080626	1	SUPPORT, Sender support
3	614-8016	2	BOLT, Hex, M8 x 16, 8.8,
4	825-1408	2	NUT, M8, Cl 8,
5	06577028	2	WASHER, SPECIAL, Locking washer M8
6	060533815	1	SWITCH, Silage switch

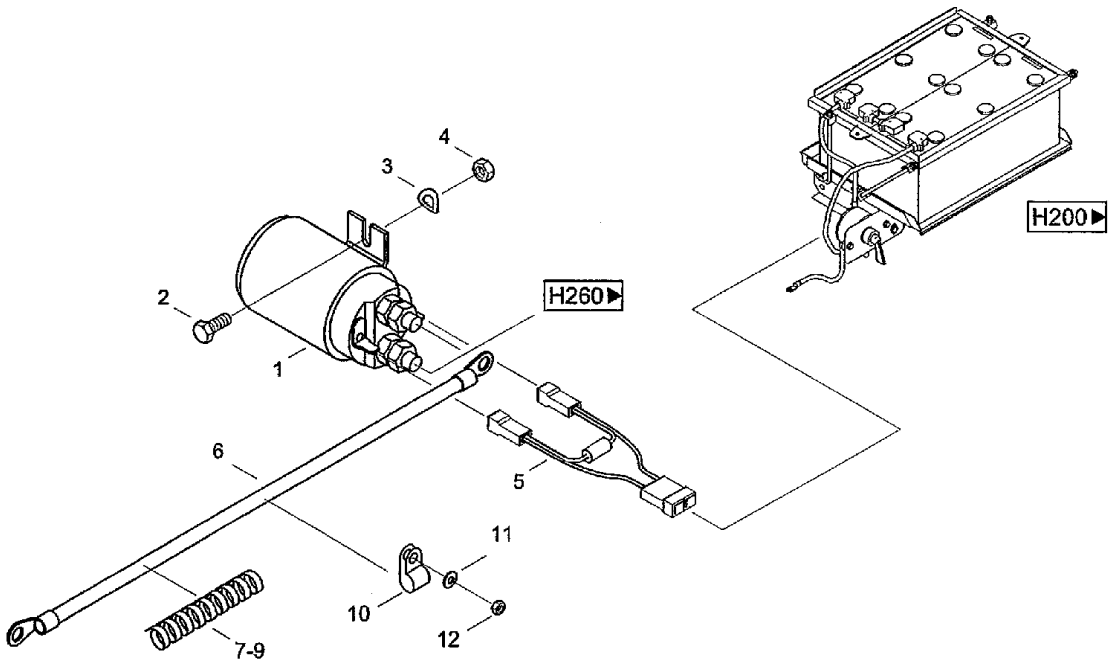

◀H090

CF80 CASE IH CROSS FLOW COMBINE

H170(02) ELECTRICAL EQUIPMENT- SENDER, GRAIN TANK [CF80K]

Ref	Part Number	Qty	Description
1	03790010	1	Relay 24V
2	614-5012	2	SCREW, Hex, M5 x 12, 8.8, Full Thd, Hex bolt M5x121SO40178.8
3	06501315	2	WASHER, SPRING, Wave washer spring B5DIN137FST
4	825-1405	2	NUT, M5, Cl 8, Hex nut M5 ISO4032 8
5	07090344	1	DIODE, Freewheeling diode
6	07090336	1	HARNESS, Cable HS-RELAIS
7	01451614	1	SPIRAL, Flat spiral 0,2M 13
8	01451614	1	SPIRAL, Flat spiral 1,2M 13
9	01451614	1	SPIRAL, Flat spiral 1.2M13
10	060526703	3	CLAMP, Pipe clip D1-13x15W1-1 DIN3016
11	06577036	3	WASHER, SPECIAL, Locking washer M6
12	829-1406	3	NUT, M6, Cl 10, Hex nut M6 ISO4032 10

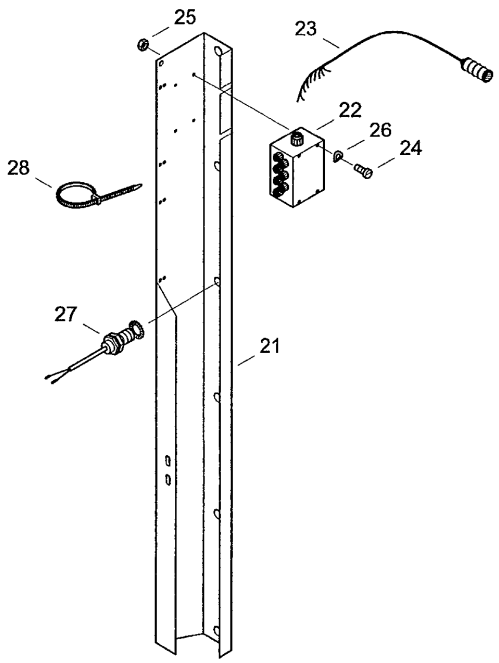

H160

CF80 CASE IH CROSS FLOW COMBINE

H180 ELECTRICAL EQUIPMENT- RETURN

Ref	Part Number	Qty	Description
21	31321150	1	SHEET, Transmitter plate
22	072068145	1	SUPPORT, Housing
23	07091031	1	HARNESS, Cable KORNTANKGEBER
24	06007698	4	SCREW, Cheese-head screw M4X16DIN844.8
25	825-1404	4	NUT, M4, Cl 8,
26	06501268	4	WASHER, SPRING, Wave washer spring B4DIN137FST
27	060529667	6	SENSOR, Sensor KAPAZIT.BC5-S18-AN4X
28	07067056	12	Cable band PLT-1,5I-30

H190(01) ELECTRICAL EQUIPMENT- SHEET METAL COVER, STRAW OUTLET

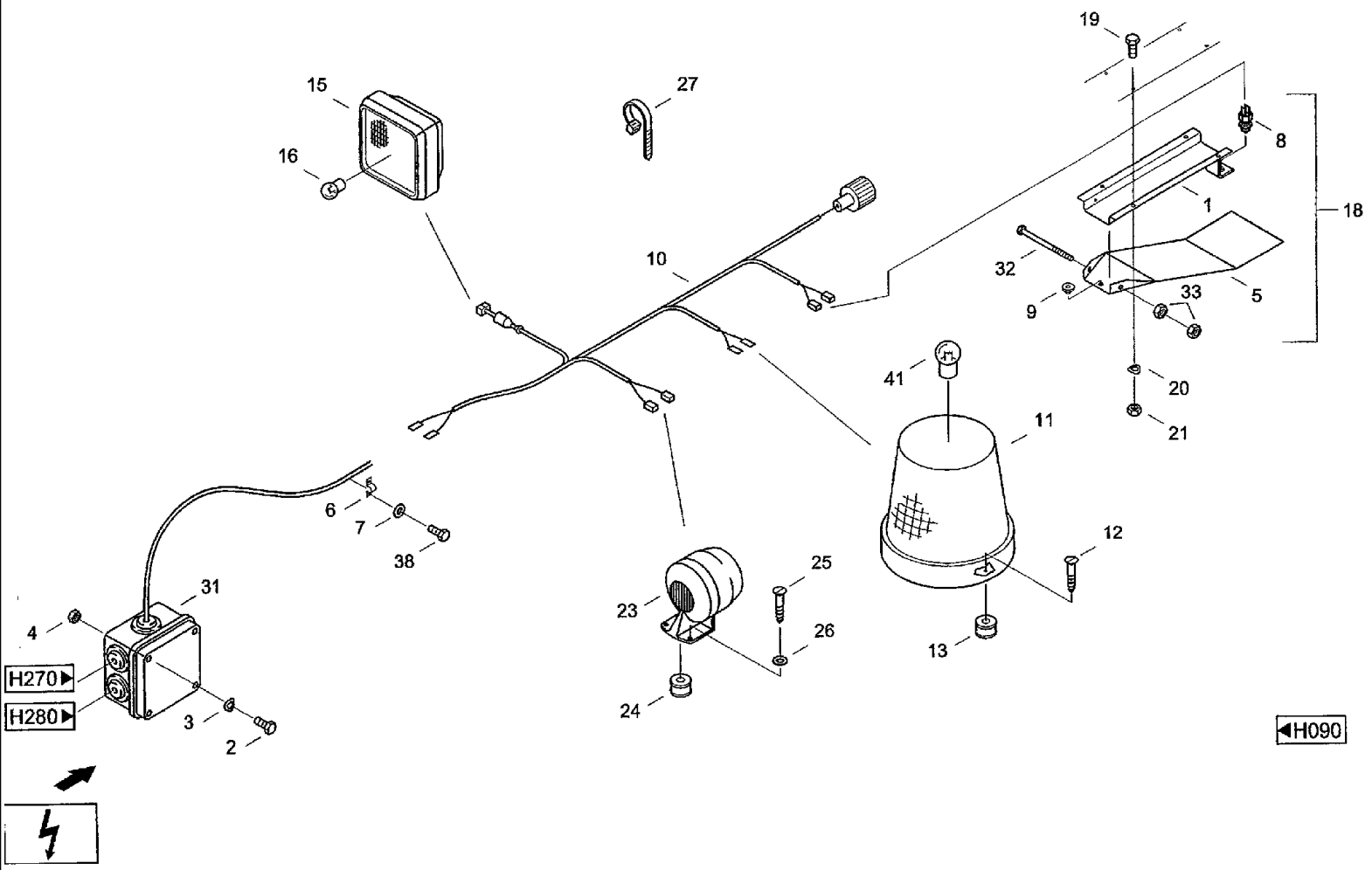

CF80 CASE IH CROSS FLOW COMBINE

H190(01) ELECTRICAL EQUIPMENT- SHEET METAL COVER, STRAW OUTLET

Ref	Part Number	Qty	Description
1	060061970	1	RETAINER, Support
2	614-6014	2	BOLT, Hex, M6 x 14, 8.8, Full Thd, Hex bolt M6x14ISO40178.8
3	06501397	2	WASHER, SPRING, Wave washer spring B6DIN137FST
4	825-1406	2	NUT, M6, Cl 8,
5	060062006	1	SHEET, Key
6	060506845	2	CLAMP, Pipe clip LH-NR.12-801-856 RSGU1.12/15W1
7	97022008	2	SNAP RING, Locking ring VSK6
8	07034706	1	SWITCH, Push button RFS/F
9	01147527	1	GROMMET, Grommet A4x1,5
10	07080672	1	HARNESS, Wiring loom HAUBE
11	07005357	1	Rotary lamp
12	06382604	3	SCREW, Self-tapping screw ST6,3x25-F-H DIN7981
13	01147793	1	GROMMET, Grommet A8x1,5
15	060531516	1	LIGHT, WORK, Work light
16	07034997	1	BULB, Filament lamp H3-55W-12V DIN72601
18	060061962	1	SENSOR, Rear hood sensor
19	614-6016	4	BOLT, Hex, M6 x 16, 8.8,
20	06501397	4	WASHER, SPRING, Wave washer spring B6DIN137FST
21	825-1406	4	NUT, M6, Cl 8,
23	060508726	1	HORN, Hooter
24	01147527	1	GROMMET, Grommet A4x1,5
25	060164655	2	SCREW, Self-tapping screw ST3,5x9,5 ISO1481 F
26	895-11004	2	WASHER, M4, Washer 4.3DIN125ST
27	07081167	8	CLIP, Cable band PRST30S-S14-30
31	060506798	1	PANEL, CONTROL, Box MIT PLATINE B2 LH-NR .12-906-0

H190(02) ELECTRICAL EQUIPMENT- SHEET METAL COVER, STRAW OUTLET

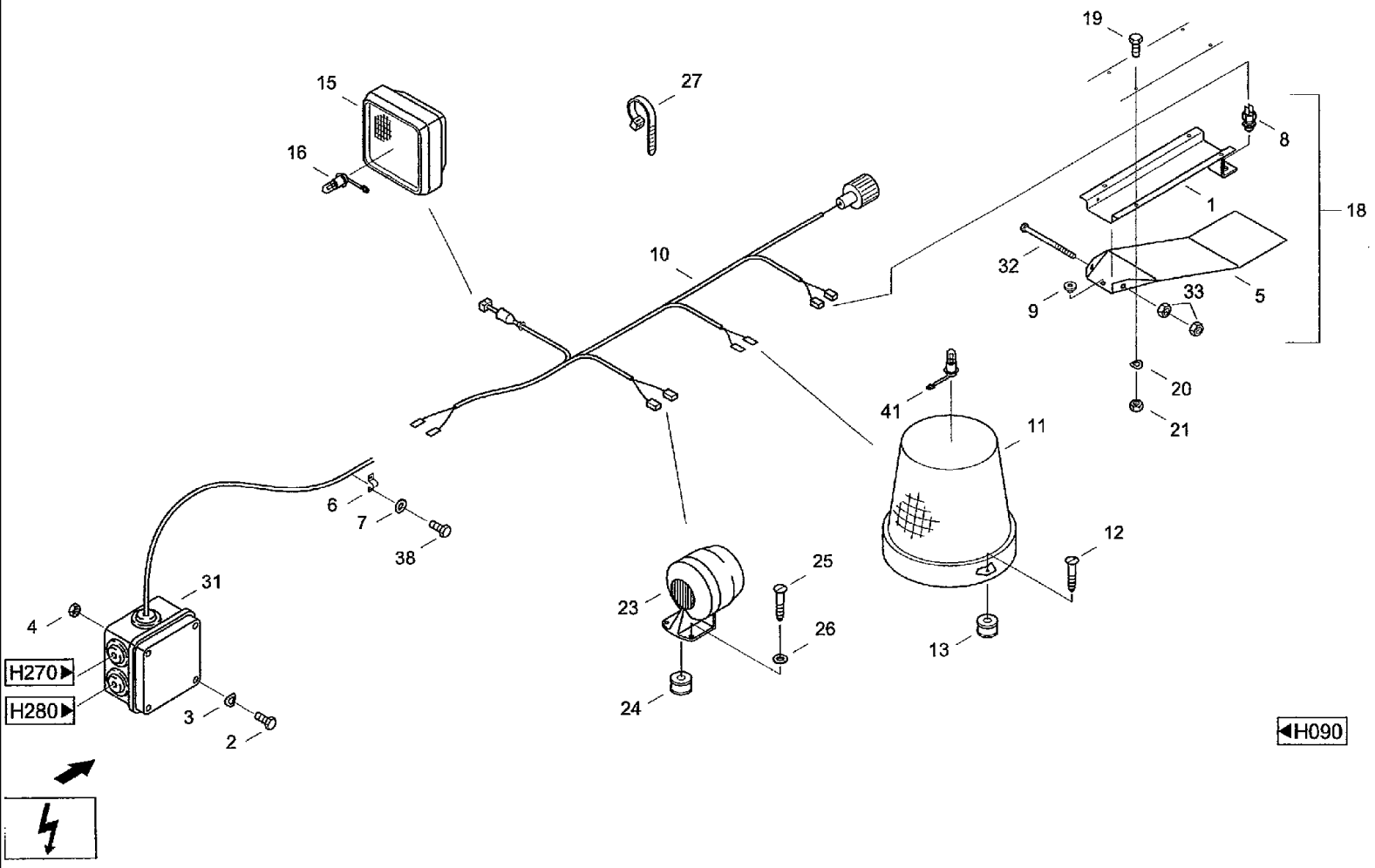

CF80 CASE IH CROSS FLOW COMBINE

H190(02) ELECTRICAL EQUIPMENT- SHEET METAL COVER, STRAW OUTLET

Ref	Part Number	Qty	Description
32	814-6090	1	BOLT, Hex, M6 x 90, 8.8, Hex bolt M6x90 IS04014 8.8
33	825-1406	2	NUT, M6, Cl 8,
38	614-6014	2	BOLT, Hex, M6 x 14, 8.8, Full Thd, Hex bolt M6x14ISO40178.8
41	07034997	1	BULB, Filament lamp H3-55W-12VDIN72601

H200(01) ELECTRICAL EQUIPMENT- BATTERY UNIT

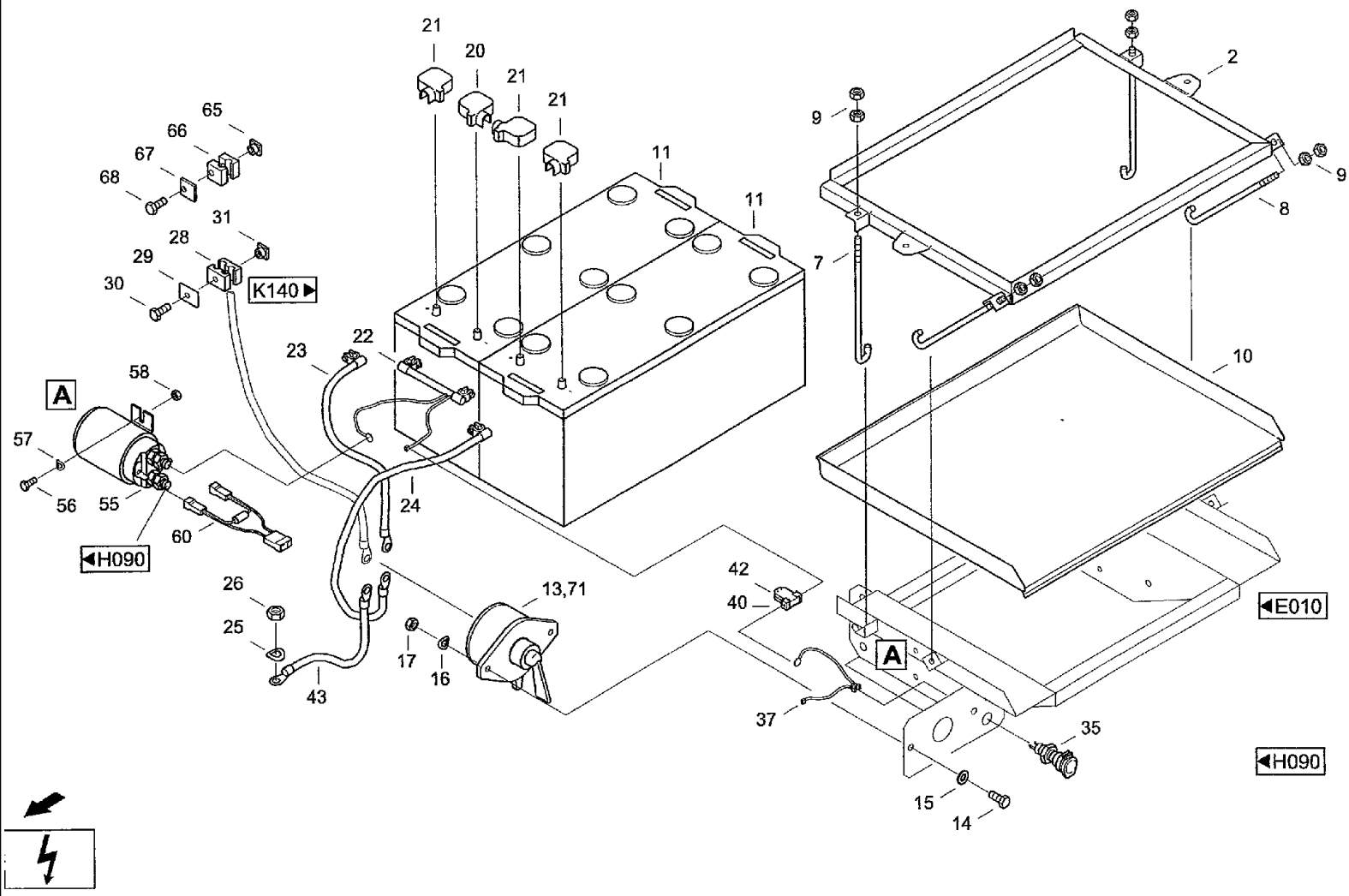

CF80 CASE IH CROSS FLOW COMBINE

H200(01) ELECTRICAL EQUIPMENT- BATTERY UNIT

Ref	Part Number	Qty	Description	
2	061009990	1	FRAME, Frame	527-52940:002/03 РАМА
7	021019604	2	ROD, Drawbar	02101960404/52900 ТЯГА
8	021019612	2	ROD, Drawbar	02101961204/52900 ТЯГА
9	825-1408	8	NUT, M8, Cl 8,	527-53000:125A-01 ДНИЩЕ
10	021019620	1	BOTTOM, Floor	
11	7003476	1	Battery 140AHTROCKEN	
13	060519472	1	BATTERY CUT-OUT, Battery master switch BHS 1002/5WSPRITZWASSERGE	
14	614-8025	2	BOLT, Hex, M8 x 25, 8.8,	
15	895-11008	2	WASHER, M8 x 16 x 1.6, Washer 8.4DIN125ST	
16	06501380	2	WASHER, CUP, Wave washer spring B8DIN137FST	
17	825-1408	2	NUT, M8, Cl 8,	
20	07066762	1	Pole guard F25L 55001	
21	07066818	3	Pole guard F25R 54901	
22	07090328	1	HARNESS, Plus/minus lead	
23	060516010	1	CABLE, Cable KENN-NR.17028	
24	060512788	1	LINE, Cable KENN-NR. 17027	
25	06501428	1	WASHER, SPRING, Wave washer spring B10DIN137FST	
26	825-1410	1	NUT, M10, Cl 8,	
28	06647918	5	FIXING BRACKET, Clamp body 216/16PP	
29	06647565	5	COVER, Cover plate Z-DP-2DIN3015W1	
30	814-8035	5	BOLT, Hex, M8 x 35, 8.8, Hex bolt M8x35 ISO4014 8.8	
31	060525261	4	NUT, Nut SM8	
35	07090883	1	PIN, ELECT TERMINAL, Socket 2-POLIG	
37	061020840	1	CONDUIT, Line PLUSKONTAKT	
40	060505715	1	PROTECTOR, Prodection holder (MERIT 13361)	

H200(02) ELECTRICAL EQUIPMENT- BATTERY UNIT

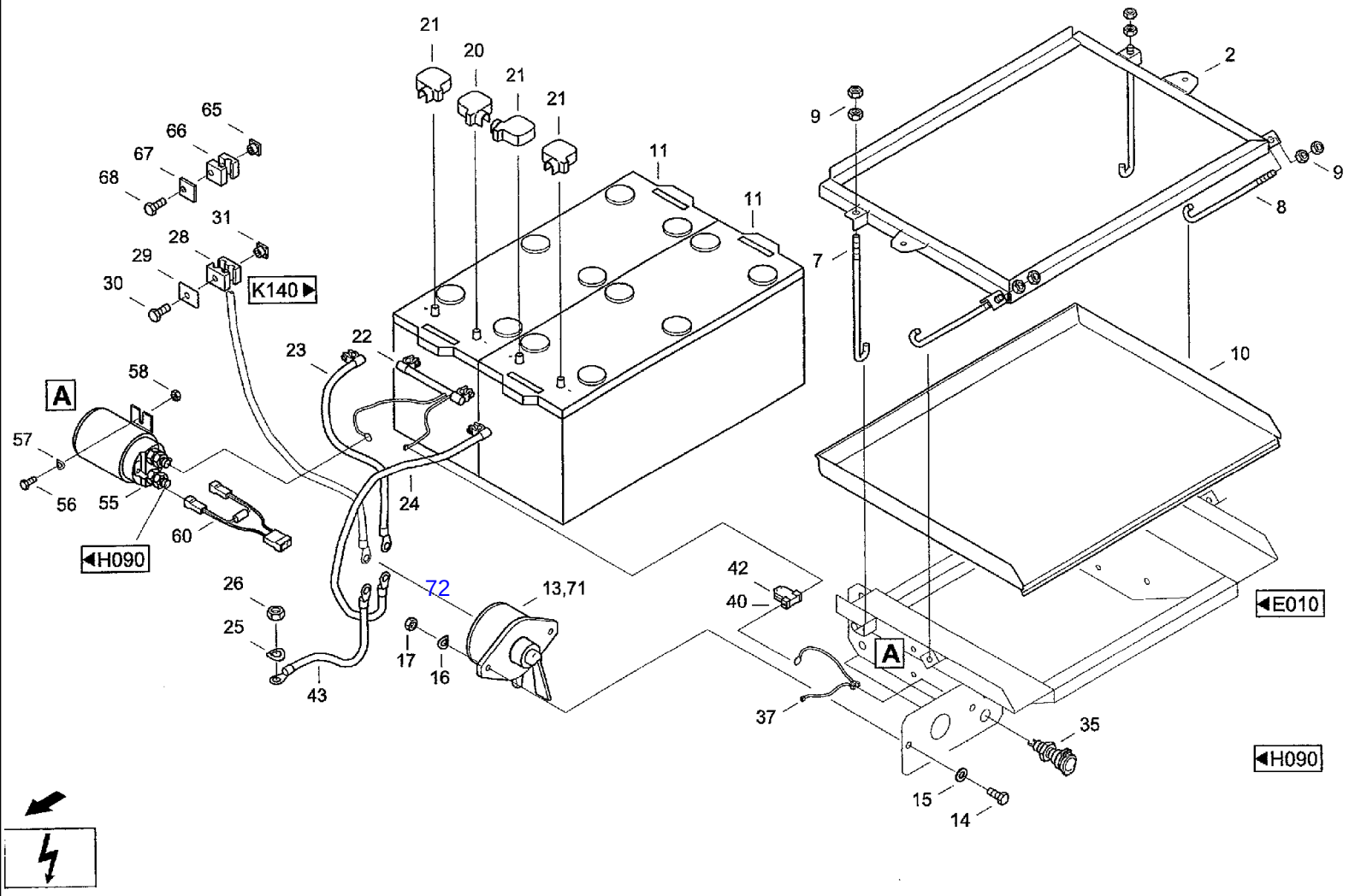

CF80 CASE IH CROSS FLOW COMBINE

H200(02) ELECTRICAL EQUIPMENT- BATTERY UNIT

Ref	Part Number	Qty	Description
42	07070420	1	FUSE, Locking 7,5A
43	060508156	1	CABLE, Connecting line MINUS KENN-NR.17024
55	3790010	1	Relay 24V
56	614-5012	2	SCREW, Hex, M5 x 12, 8.8, Full Thd, Hex bolt M5x12ISO40178.8
57	06501315	2	WASHER, SPRING, Wave washer spring B5DIN137FST
58	825-1405	2	NUT, M5, Cl 8, Hex nut M5 ISO4032 8
60	07090344	1	DIODE, Freewheeling diode
65	6646138	4	Nut SM6
66	06646363	4	SHIN, Clamping halves L-KP-O-R-12 DIN3015PP
67	06645684	4	COVER, Cover plate L-DP-ODIN3015W1
68	814-6035	4	BOLT, Hex, M6 x 35, 8.8, Bolt, Hex, M6 x 35, 8.8, ISO 4014
71	03221672	1	KEY, Key HAUPTSCHALTER F.BHS 1001
72		1	527-52940:045/04 ПЛАСТИНА ЗАЩИТНАЯ
73		1	527-53000:125A КРЫШКА АККУМУЛЯТОРА

H230(01) ELECTRICAL EQUIPMENT- CONTROL PANEL [CF80K]

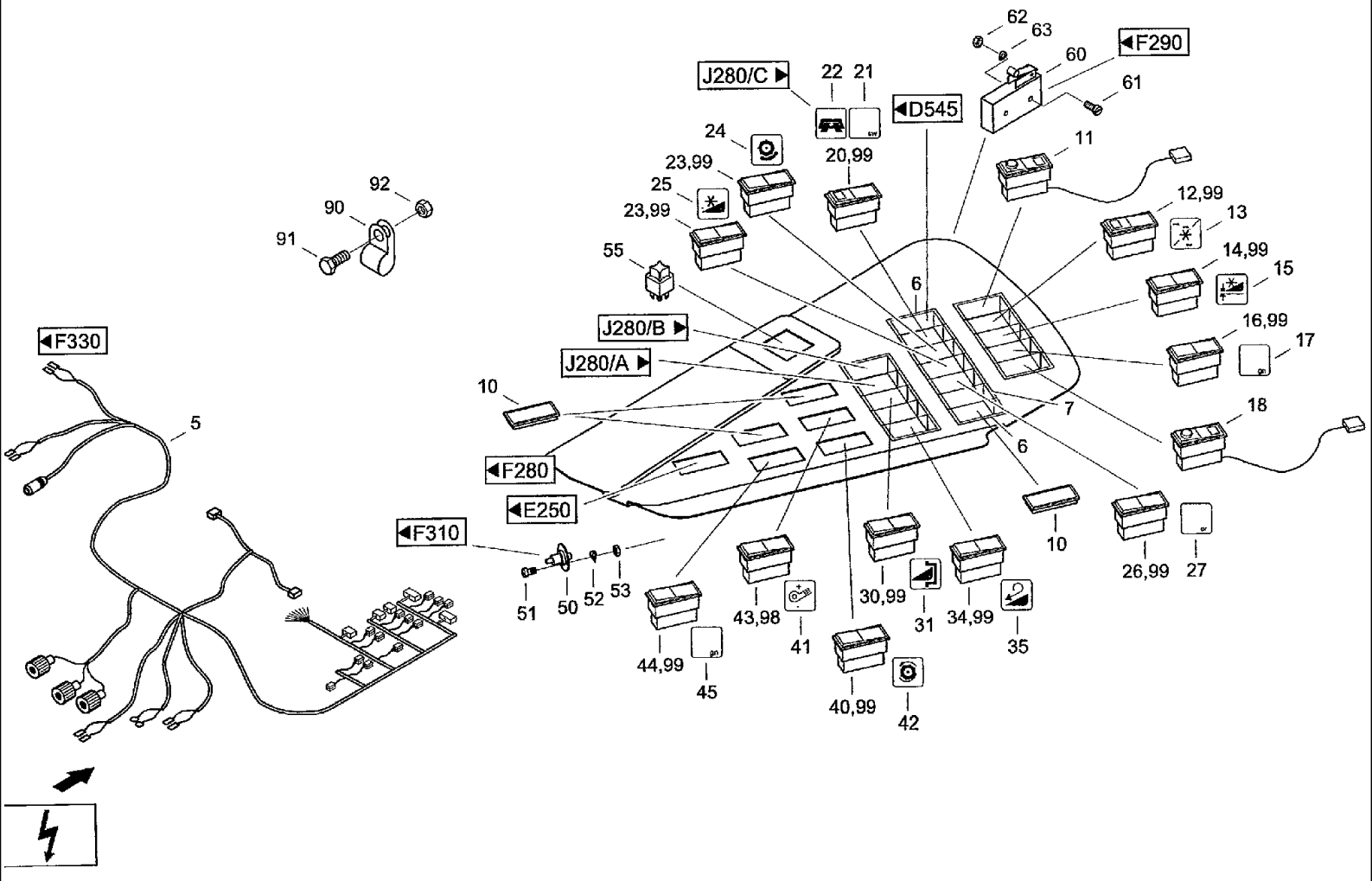

CF80 CASE IH CROSS FLOW COMBINE

H230(01) ELECTRICAL EQUIPMENT- CONTROL PANEL [CF80K]

Ref	Part Number	Qty	Description
5	03221687	1	HARNESS, Whring loom BEDIENPULTVAR.K
6	07069564	4	END, End piece
7	060518912	8	ADAPTER, Intermediate piece
10	07070445	9	COVER, PROTECTIVE, Panel
11	060512843	1	POTENTIOMETER, Potentiometer k, B2
12	060157744	1	SWITCH, Toggle switch
13	072049167	1	SYMBOLS, Symbol
20	060157816	1	BULB, Indicator light 24V 2-FACH
21	07069388	1	INSERT, Insert sw
22	061033090	1	SYMBOLS, Symbol
23	060157744	2	SWITCH, Toggle switch
24	07076780	1	SYMBOLS, Insert
25	07076811	1	SYMBOLS, Insert
26	060512714	1	SWITCH, Toggle switch
27	07072785	1	INSERT, Insert ORANGE
34	060157785	1	SWITCH, Toggle switch
35	060523042	1	SYMBOLS, Insert
50	060533880	1	CONNECTION, ELECTRIC, Door contact switch
51	6005743	2	Cheese-head screw M4x6 DIN84 5.8
52	06501268	2	WASHER, SPRING, Wave washer spring B4 DIN137 FST
53	829-4404	2	NUT, Thin, M4 x .7, Cl 05, Hex nut M4 ISO4035 05
55	060508486	1	SWITCH, Switch
60	141655A1	1	SWITCH, Switch
61	463-10416	2	SCREW, Hex Hd, #4-40 x 1", Hex bolt #4-40x1 ZOLL
62	225-14104	2	NUT, #4-40, Hex nut #-40

H230(02) ELECTRICAL EQUIPMENT- CONTROL PANEL [CF80Q]

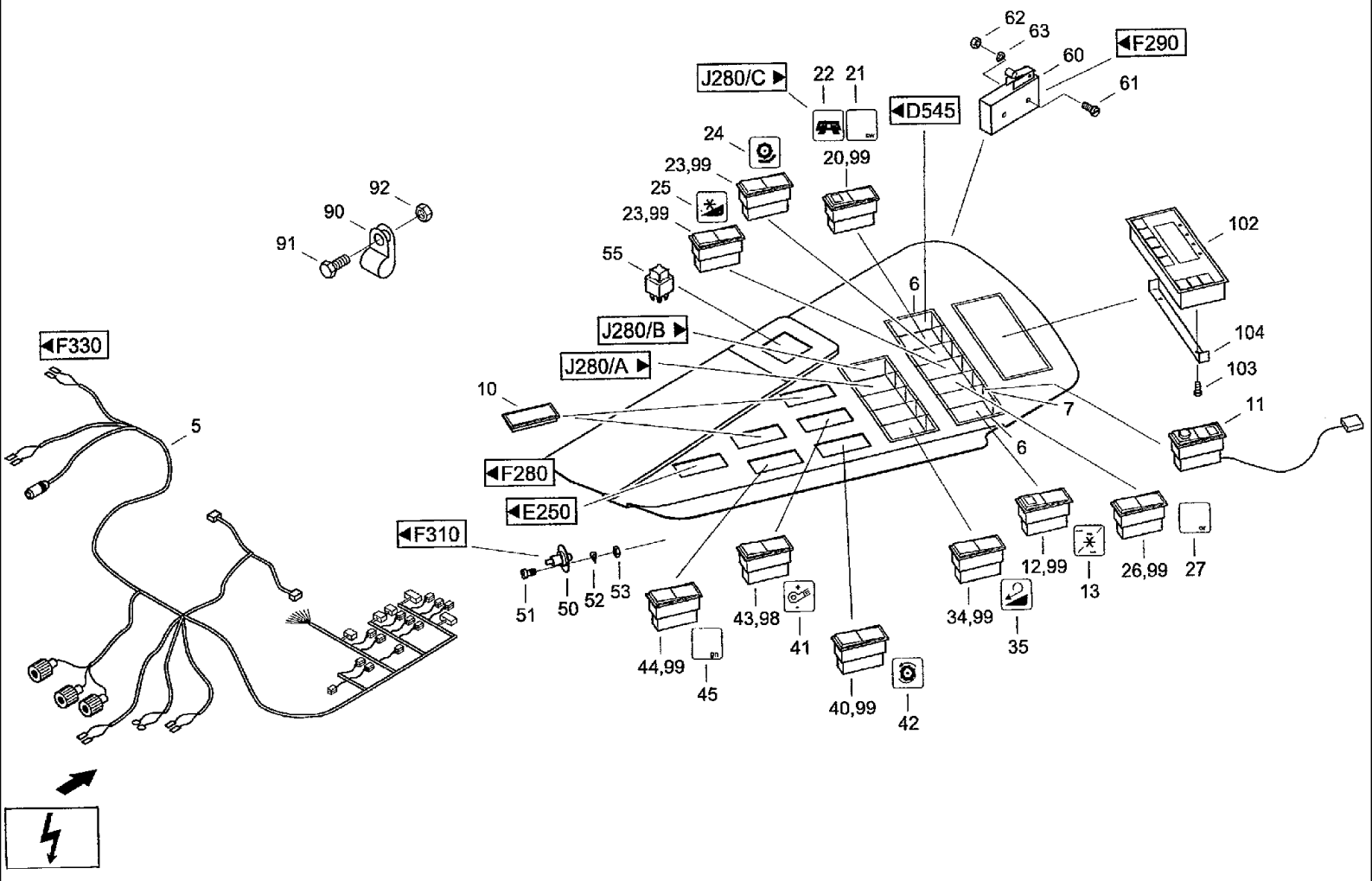

CF80 CASE IH CROSS FLOW COMBINE

H230(02) ELECTRICAL EQUIPMENT- CONTROL PANEL [CF80Q]

Ref	Part Number	Qty	Description
5	31337488	1	HARNESS, Whring loom BEDIENPULT
6	07069564	4	END, End piece
7	060518912	8	ADAPTER, Intermediate piece
10	07070445	5	COVER, PROTECTIVE, Panel
11	060512843	1	POTENTIOMETER, Potentiometer k, B2
12	060157744	1	SWITCH, Toggle switch
13	072049167	1	SYMBOLS, Symbol
20	060157816	1	BULB, Indicator light 24V 2-FACH
21	07069388	1	INSERT, Insert 9x1713630011
22	061033090	1	SYMBOLS, Symbol
23	060157744	2	SWITCH, Toggle switch
24	07076780	1	SYMBOLS, Insert
25	07076811	1	SYMBOLS, Insert
26	060512714	1	SWITCH, Toggle switch
27	07072785	1	INSERT, Insert ORANGE
34	060157785	1	SWITCH, Toggle switch
35	060523042	1	SYMBOLS, Switch insert
40	060157728	1	SWITCH, Toggle switch
41	07080832	1	LAMP, Switch insert
42	07080824	1	LAMP, Switch insert
43	04120449	1	SWITCH, Rocker switch
44	060157744	1	SWITCH, Toggle switch
45	060157840	1	INSERT, Switch insert
50	060533880	1	CONNECTION, ELECTRIC, Door contact switch
51	6005743	2	Cheese-head screw M4x6 DIN84 5.8

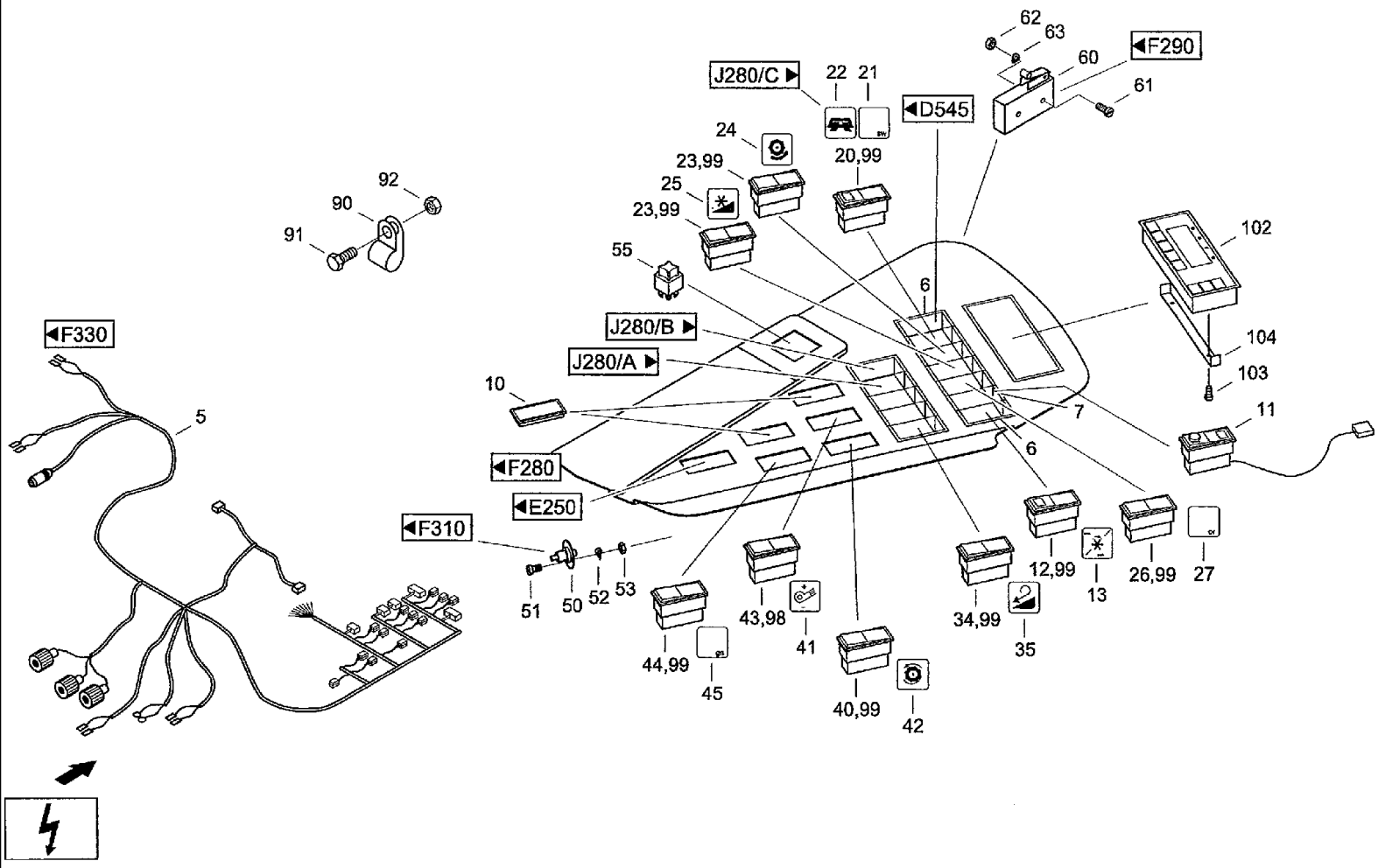
62
63
F290
60
61
J280/C
22
21
D545
24
20,99
23,99
25
23,99
55
92
90
91
102
6
J280/B
104
J280/A
103
10
7
11
6
F330
5
F280
E250
F310
51
50
52
53
43,98
41
44,99
45
40,99
42
34,99
35
12,99
13
26,99
27

CF80 CASE IH CROSS FLOW COMBINE

H230(03) ELECTRICAL EQUIPMENT- CONTROL PANEL [CF80Q]

Ref	Part Number	Qty	Description
52	06501268	2	WASHER, SPRING, Wave washer spring B4DIN137FST
53	829-4404	2	NUT, Thin, M4 x .7, Cl 05, Hex nut M4 ISO4035 05
55	060508486	1	SWITCH, Switch
60	141655A1	1	SWITCH, Switch
61	463-10416	2	SCREW, Hex Hd, #4-40 x 1", Hex bolt #4-40x1 ZOLL C-031 CST
62	225-14104	2	NUT, #4-40, Hex nut #-40 E-091 CST
63	895-11005	2	WASHER, M5 x 10 x 1, Washer 5.3DIN125DIN125
90	02885508	1	CLAMP, Pipe clip D1-30x15W1-1 DIN3016
91	614-8020	1	BOLT, Hex, M8 x 20, 8.8, Hex bolt M8x20ISO40178.8
92	825-1408	1	NUT, M8, Cl 8,
98	07070453	1	SOCKET, Socket 12VM.FASSUNG
99	07069363	9	SOCKET, Socket 24VM.FASSUNG
102	07090432	1	CONTROL, Indicator unit OPUSLP10COP
103	06008207	2	SCREW, Cheese-head screw M3x6 DIN84 4.8
104	03221380	2	BOW, Bracket

H240(01) ELECTRICAL EQUIPMENT- CENTRAL TERMINAL COMPARTMENT [CF80K]

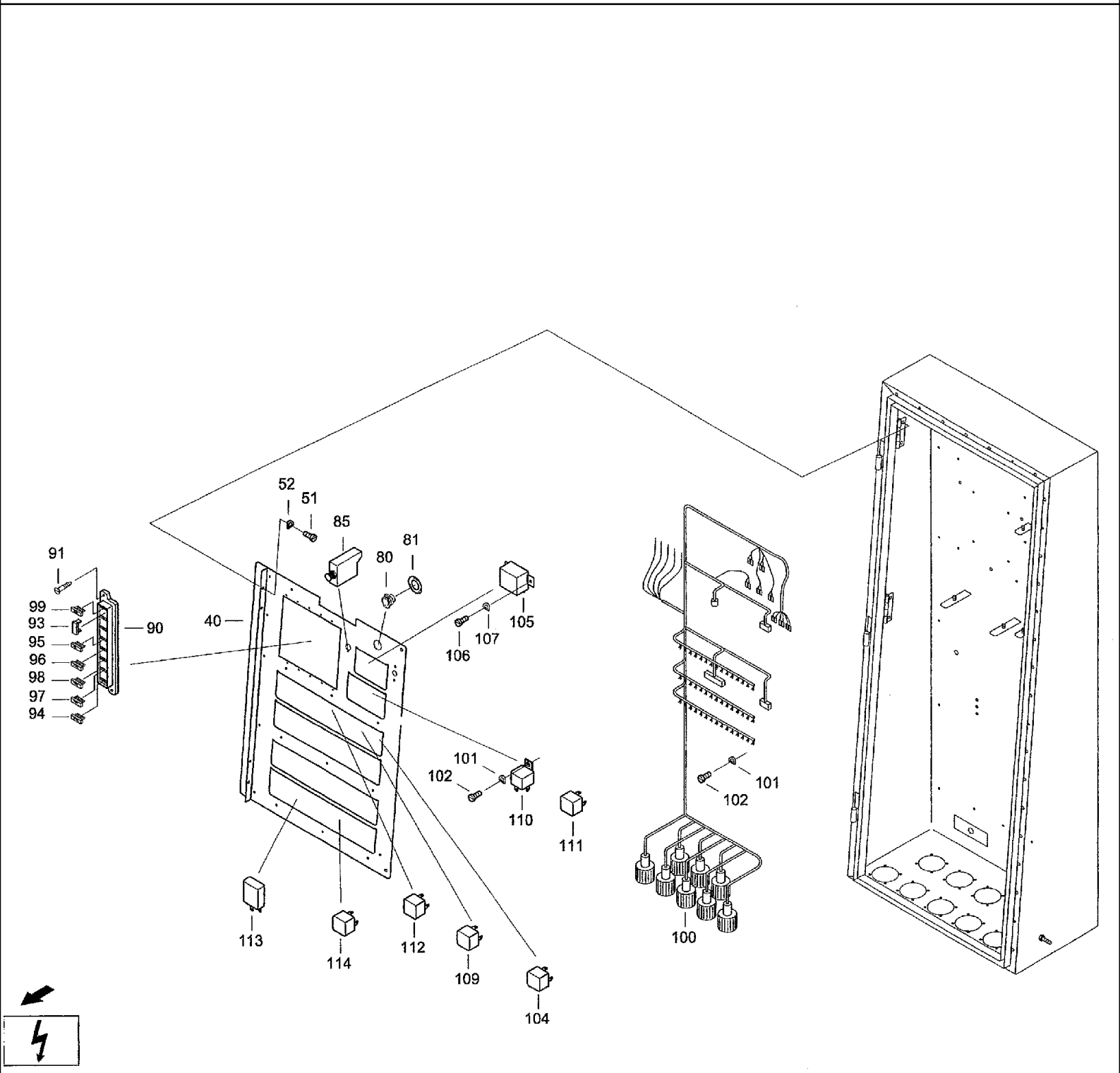

CF80 CASE IH CROSS FLOW COMBINE

H240(01) ELECTRICAL EQUIPMENT- CENTRAL TERMINAL COMPARTMENT [CF80K]

Ref	Part Number	Qty	Description
1	31352864	1	FRAME, Housing IEES
8	06577028	4	WASHER, SPECIAL, Locking washer M8
9	825-1408	8	NUT, M8, Cl 8,
30	07078637	2	CABLE ASSY., Earth line
31	825-1406	4	NUT, M6, Cl 8,
32	06501397	2	WASHER, SPRING, Wave washer spring B6DIN137FST
35	061071360	1	DOOR, Door
40	31290544	1	SUPPORT, Relay carrier
45	061071311	1	PROFILE, Seal profil TUR
46	061071297	1	PROFILE, Rubber strip ig
50	06440383	1	PIN, Pin 3Kg 6x61 SELBSTSICHERND
51	6003942	4	Cheese-head screw M5x6DIN844.8
52	06501315	4	WASHER, SPRING, Wave washer spring B5DIN137FST
53	060518463	2	SUPPORT, Dzus bracket
54	060518568	2	SHAFT, CROSS, Pin
55	060518576	2	WASHER, RUBBER, Rubber disc
60	060533960	2	GUIDE, Rod guide
61	060533928	1	LOCK, Gib and cotter
62	060533936	1	FASTENER, Flange mounted shim
63	06440391	1	FASTENER, Operation 1Kg
64	060533952	1	LOCK ASSY, Catch bolt
65	061075758	2	BAR, Rod
66	06006326	2	SCREW, Cheese-head screw M5x35DIN844.8
67	06501315	2	WASHER, SPRING, Wave washer spring B5D1N137FST
68	03292381	2	SCREW, Hex nut M5 DIN985 8

H240(02) ELECTRICAL EQUIPMENT- CENTRAL TERMINAL COMPARTMENT [CF80Q]

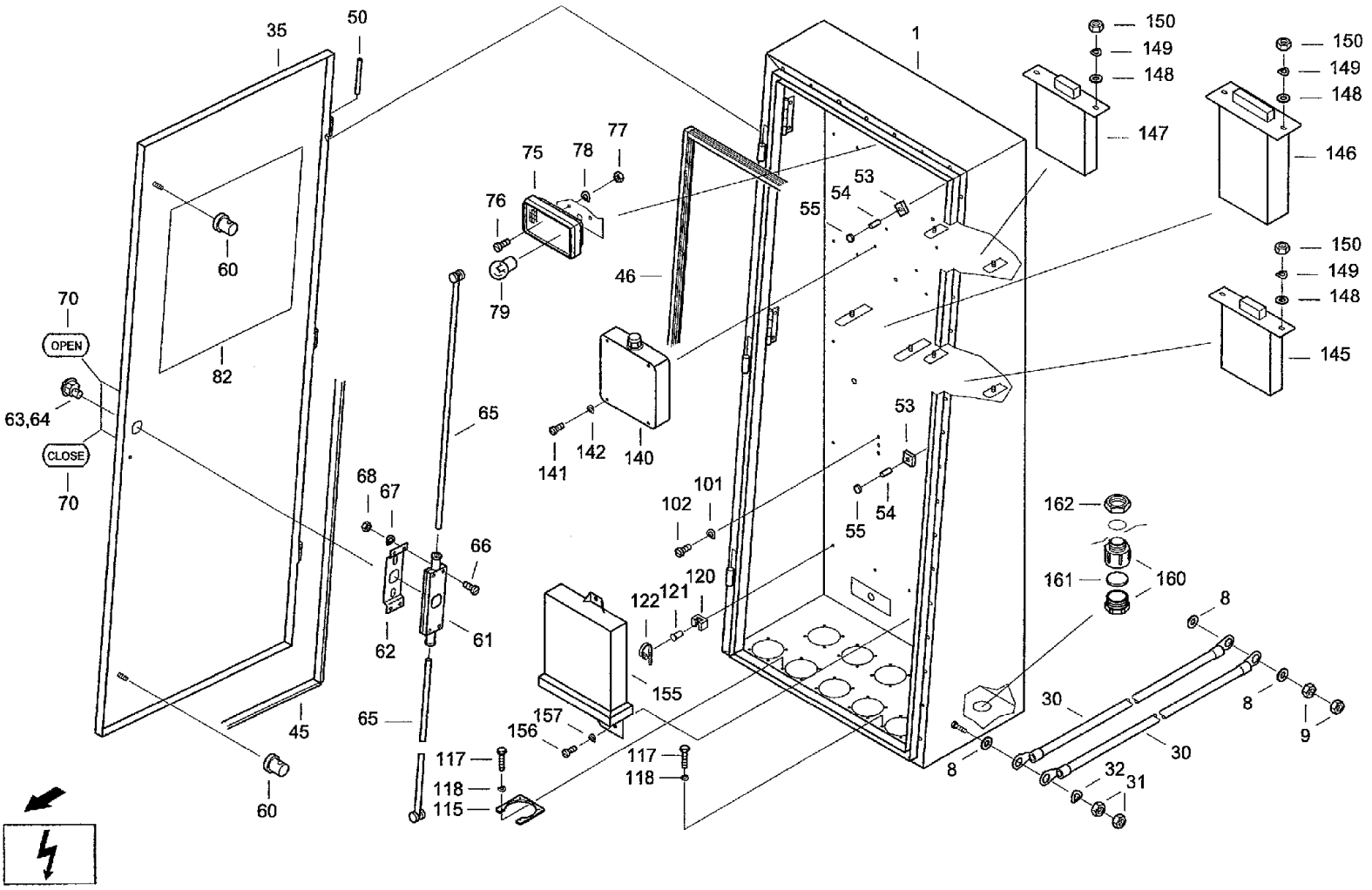

CF80 CASE IH CROSS FLOW COMBINE

H240(02) ELECTRICAL EQUIPMENT- CENTRAL TERMINAL COMPARTMENT [CF80Q]

Ref	Part Number	Qty	Description
1	061071385	1	FRAME, Housing
8	06577028	4	WASHER, SPECIAL, Locking washer M8
9	825-1408	4	NUT, M8, Cl 8,
30	07078637	2	CABLE ASSY., Earth line
31	825-1406	4	NUT, M6, Cl 8,
32	06501397	3	WASHER, SPRING, Wave washer spring B6DIN137FST
35	061071360	1	DOOR, Door
40	31290544	1	SUPPORT, Relay carrier
45	061071311	1	PROFILE, Seal profil TUR
46	061071297	1	PROFILE, Rubber strip ig
50	06440383	1	PIN, Pin 3Kg 6x61 SELBSTSICHERND
51	6003942	4	Cheese-head screw M5x6 DIN84 4.8
52	06501315	4	WASHER, SPRING, Wave washer spring B5DIN137FST
53	060518463	2	SUPPORT, Dzus bracket
54	060518568	2	SHAFT, CROSS, Pin
55	060518576	2	WASHER, RUBBER, Rubber disc
60	060533960	2	GUIDE, Rod guide
61	060533928	1	LOCK, Gib and cotter
62	060533936	1	FASTENER, Flange mounted shim
63	06440391	1	FASTENER, Operation 1Kg
64	060533952	1	LOCK ASSY, Catch bolt
65	061075758	2	BAR, Rod
66	06006326	2	SCREW, Cheese-head screw M5x35DIN844.8
67	06501315	2	WASHER, SPRING, Wave washer spring B5DIN137FST
68	03292381	2	SCREW, Hex nut M5 DIN985 8

H240(03) ELECTRICAL EQUIPMENT- CENTRAL TERMINAL COMPARTMENT [CF80Q]

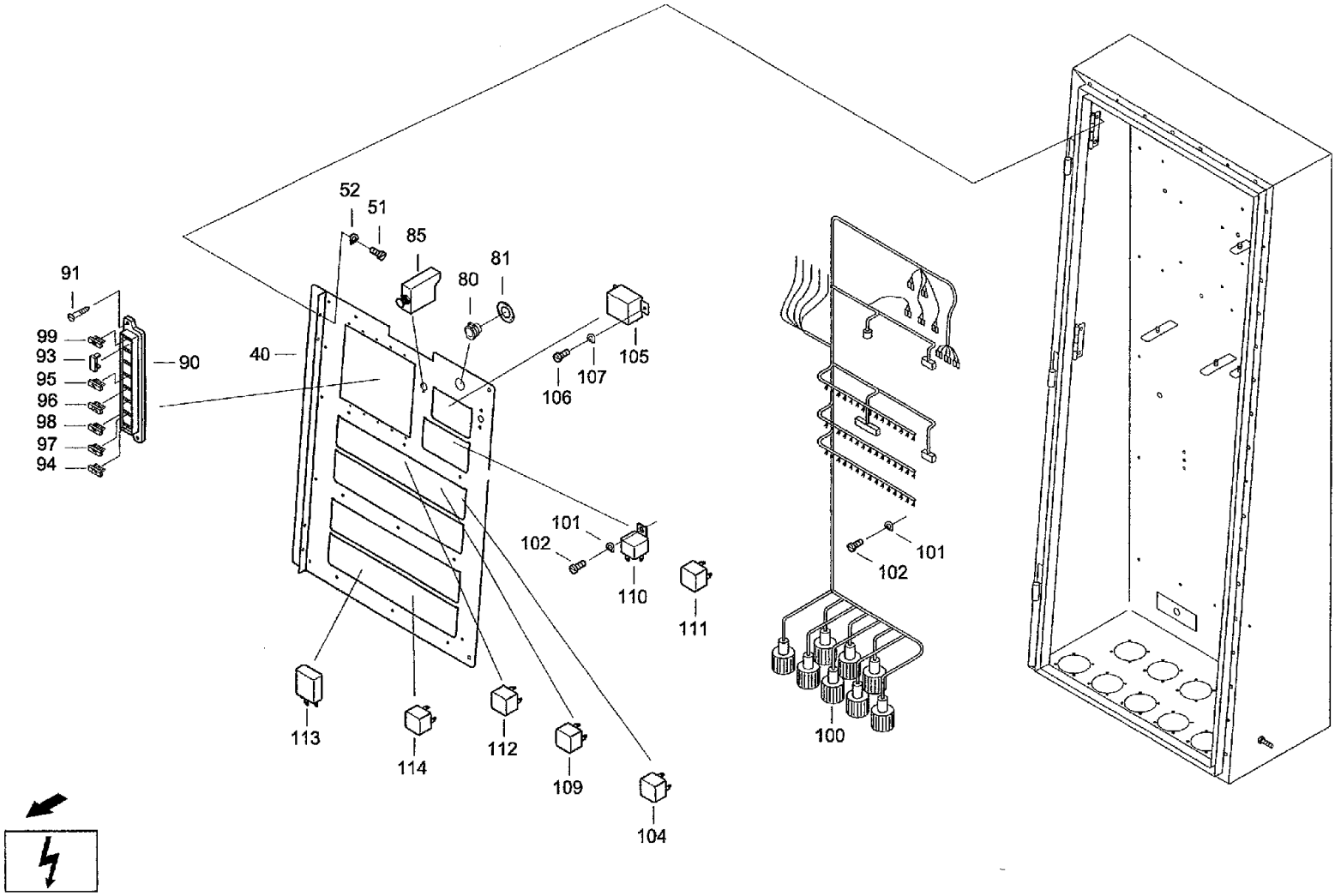

CF80 CASE IH CROSS FLOW COMBINE

H240(03) ELECTRICAL EQUIPMENT- CENTRAL TERMINAL COMPARTMENT [CF80Q]

Ref	Part Number	Qty	Description
70	31340916	1	DECAL, Decal SATZ
75	060533872	1	LIGHT, Inner lamp
76	6002677	2	Cheese-head screw M5X10DIN845.8
77	832-10405	2	NUT, LOCK, M5 x .8, Cl 8, Hex nut M5 DIN982 8
78	06501315	2	WASHER, SPRING, Wave washer spring B5DIN137FST
79	07075177	1	LIGHT, Filament lamp K12V-10W-SV8.5 DIN72601
80	3790541	1	Socket
81	09169613	1	DECAL, Plate 12V
82	09169718	1	DECAL, Decal
85	060505893	1	SWITCH, Protection switch TYP413-K54-FN2-50A
90	060502087	5	FUSE BOX, Fuse box
91	060164655	10	SCREW, Self-tapping screw ST3,5x9,5 ISO1481 F
93	060502095	24	BRIDGE, Reinforcing bar
94	060534213	2	FUSE, Protection 2A
95	07070412	9	FUSE, Locking 4A4A
96	07070420	12	FUSE, Locking 7,5A
97	07072205	5	FUSE, Locking 10A
98	060502126	7	FUSE, Protection 15A
99	07080406	5	FUSE, Locking 25A (FLACHSTECKS.)
100	31346431	1	HARNESS, Central cable
101	06501315	20	WASHER, SPRING, Wave washer spring B5DIN137FST
102	06007987	20	SCREW, Cheese-head screw M5X8DIN844.8
104	07090545	3	RELAY, Switch, relay V23134-12053-X194
105	07080994	1	RELAY, Relay
106	06007987	2	SCREW, Cheese-head screw M5x8 DIN84 4.8

H240(04) ELECTRICAL EQUIPMENT- CENTRAL TERMINAL COMPARTMENT [CF80Q]

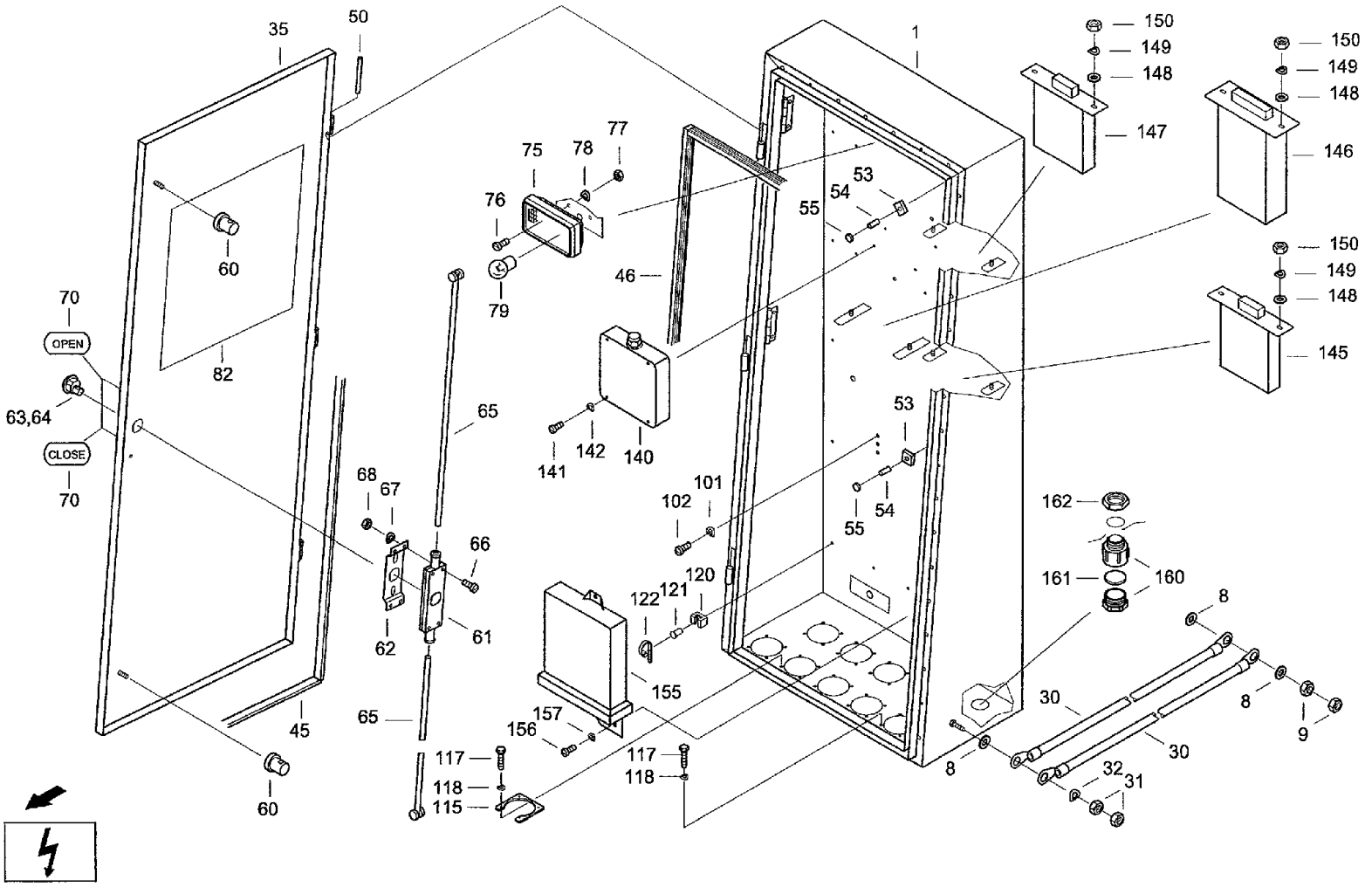

CF80 CASE IH CROSS FLOW COMBINE

H240(04) ELECTRICAL EQUIPMENT- CENTRAL TERMINAL COMPARTMENT [CF80Q]

Ref	Part Number	Qty	Description
107	06501315	2	WASHER, SPRING, Wave washer spring B5 DIN137 FST
109	98032740	1	RELAY, Relay 899210
110	98032739	1	NO DESCRIPTION, Flasher relay
111	060518496	1	RELAY, Relay
112	07075796	5	DIODE, Diode matrix
113	072079260	33	RELAY, Mini relay
114	07077033	4	RELAY, Relay
115	061071272	12	PLATE, LARGE, Holding plate
117	06336037	36	SCREW, Hex bolt M3x12ISO40178.8
118	06501700	36	WASHER, SPRING, Wave washer spring B3DIN137FST
120	060532156	33	SUPPORT, Support
121	060522677	33	RIVET, Rivet A4x12-ST-A1P-ST-A1P DIN7337
122	07070043	33	CABLE, Cable band 250x4,8 TSL-250-S
140	31340885	1	AMPLIFIER, Governor 2001-ELEK
141	06006978	4	SCREW, Cheese-head screw M4x8 DIN84 5.8
142	06501268	4	WASHER, SPRING, Wave washer spring B4 DIN 137 FST
145	060510800	1	UNIT, Kbg-cutterbar return movement
146	07090352	1	AUTOM. CIRCUITBREAKER, Basket control BR.249000/1
147	060509382	1	AUTOM. CIRCUITBREAKER, Kbg-start-stop
148	895-25005	6	WASHER, M5 x 15 x 1.6, Washer 5,3 DIN9021 140HV
149	06501315	6	WASHER, SPRING, Wave washer spring B5DIN137FST
150	825-1405	6	NUT, M5, Cl 8, Hex nut M5 IS04032 8
155	07090215	1	UNIT, Control unit CCU BEST.-NR.
156	614-6010	3	BOLT, Hex, M6 x 10, 8.8, Full Thd, Hex bolt M6x10ISO40178.8
157	06501397	3	WASHER, SPRING, Wave washer spring B6DIN137FST

H240(05) ELECTRICAL EQUIPMENT- CENTRAL TERMINAL COMPARTMENT [CF80Q]

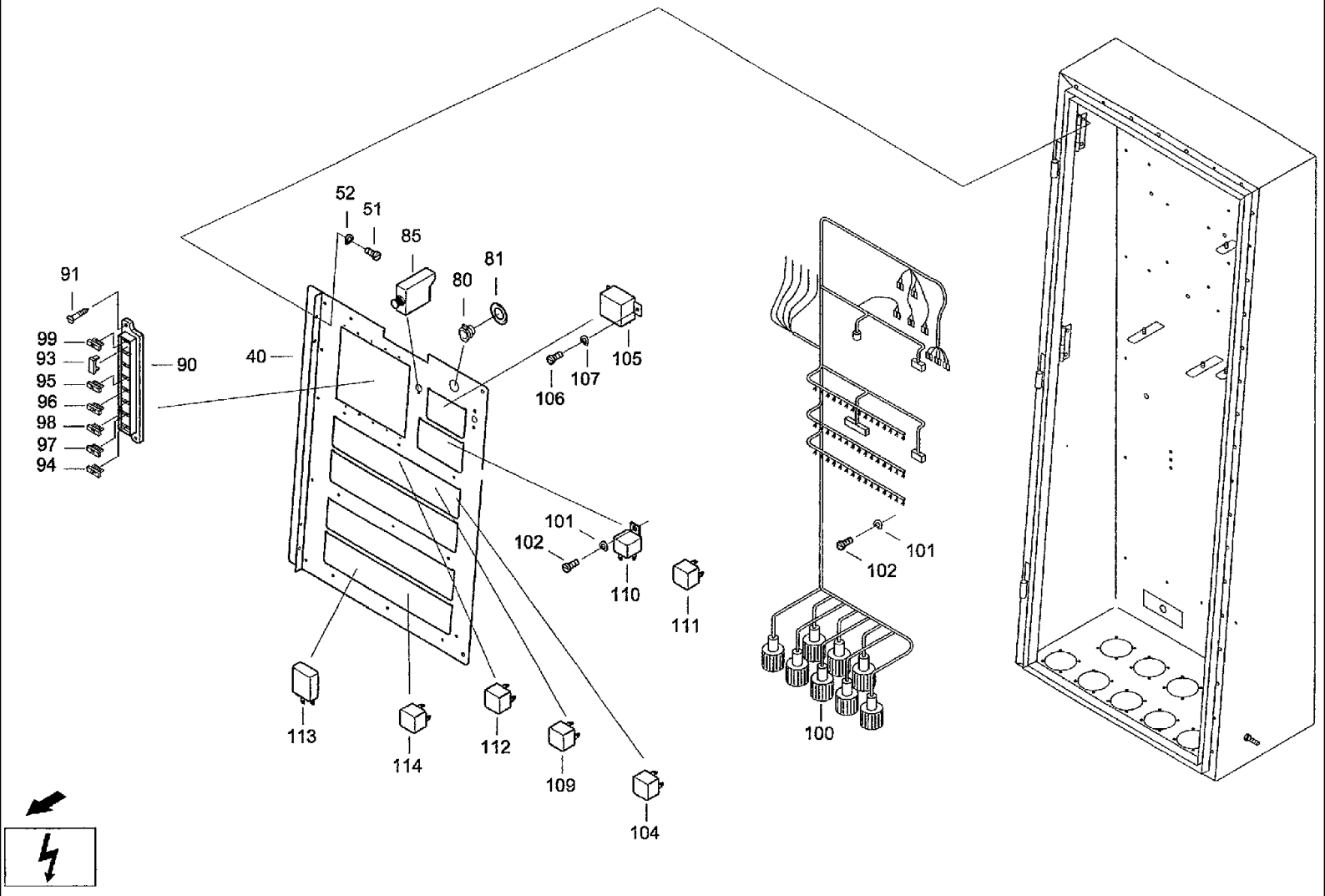

CF80 CASE IH CROSS FLOW COMBINE

H240(05) ELECTRICAL EQUIPMENT- CENTRAL TERMINAL COMPARTMENT [CF80Q]

Ref	Part Number	Qty	Description
160	07091312	1	BLANK-OFF PLUG, Closure APG13,5x6-13,5 DIN46320 FS
161	31340924	1	PLATE, SPACER, Filter small plate
162	07091304	1	NUT, Nut LPG13.5DIN46320FS

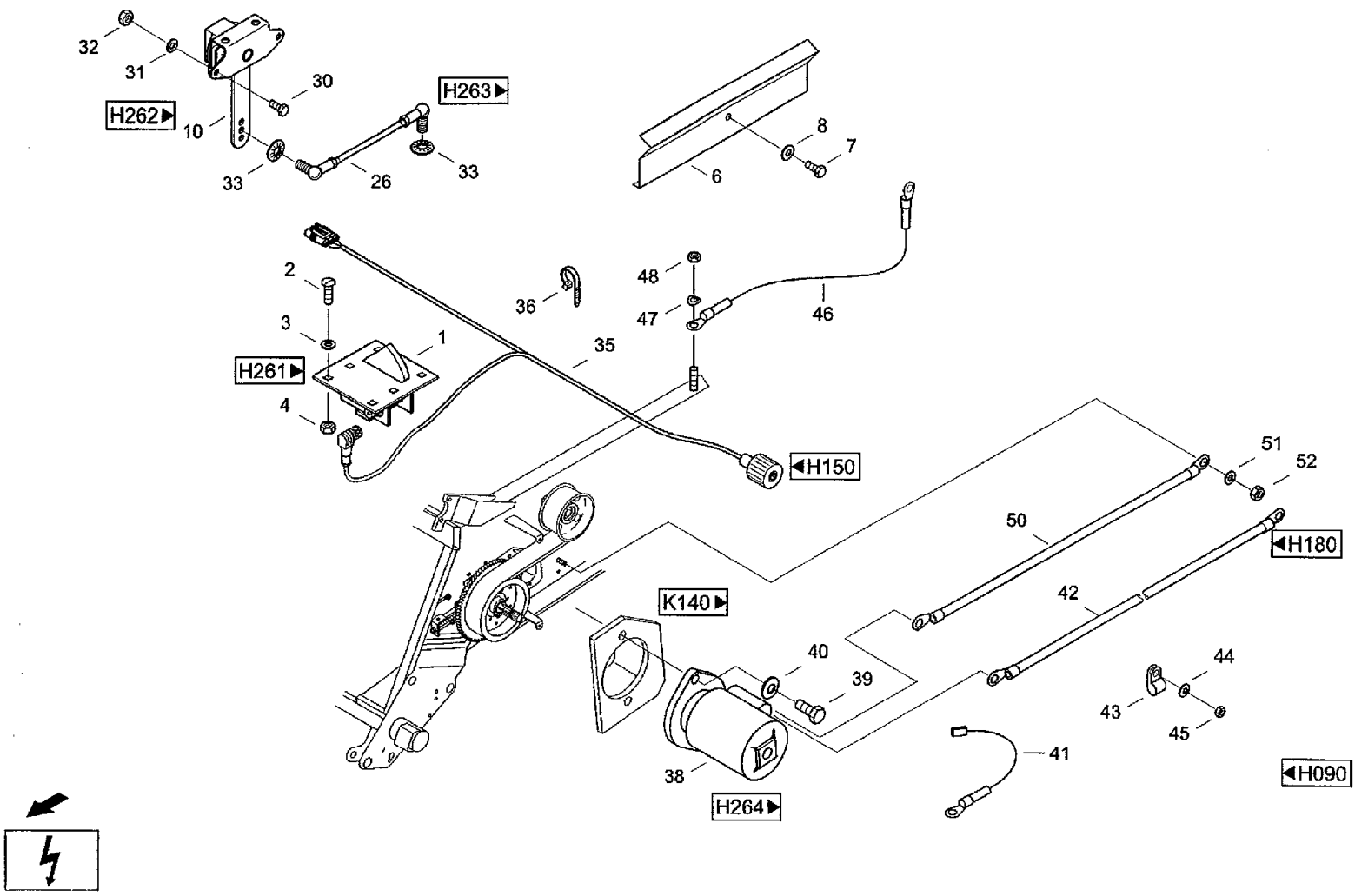
32
31
30
H263
H262
10
33
26
33
8
7
6
2
36
48
47
46
3
1
35
H261
4
H150
51
52
50
H180
42
K140
40
39
44
43
45
41
38
H264
H090

CF80 CASE IH CROSS FLOW COMBINE

H260(01) ELECTRICAL EQUIPMENT- FEEDER [CF80P]

Ref	Part Number	Qty	Description
1	061075838	1	SWITCH, Crop switch
2	7751242	6	Flat-round-head screw M6x16 DIN603 8.8
3	06577036	6	WASHER, SPECIAL, Locking washer M6
4	825-1406	6	NUT, M6, Cl 8,
6	31287604	1	CABLE SHEATH., Cable protection
7	614-8016	1	BOLT, Hex, M8 x 16, 8.8,
8	06577028	1	WASHER, SPECIAL, Locking washer M8
10	31346954	1	LEVER, Sender Pendelrahmen
26	31292876	1	STEM, Pushrod
30	614-5012	2	SCREW, Hex, M5 x 12, 8.8, Full Thd, Hex bolt M5x12ISO40178.8
31	97022007	2	SNAP RING, Locking ring VSK5 DIN
32	825-1405	2	NUT, M5, Cl 8, Hex nut M5 ISO4032 8
33	06577036	2	WASHER, SPECIAL, Locking washer M6
35	07078678	1	HARNESS, Wiring loom SCHACHT
36	060152467	1	CABLE, Cable band PLT-2S-M30 87113054.8X188 MM
38	060165777	1	MOTOR, STARTER, Armature 24V
39	614-12025	2	BOLT, Hex, M12 x 25, 8.8, Hex bolt M12x25ISO40178.8
40	06577011	2	PLATE, LOCKING, Locking washer M12
41	060061585	1	LINE, Line 30-50
42	07091273	1	HARNESS, Cable MOTOR-RQCKLAUF
43	060526703	6	CLAMP, Pipe clip D1-13x15W1-1 DIN3016
44	06577036	6	WASHER, SPECIAL, Locking washer M6
45	614-6012	6	BOLT, Hex, M6 x 12, 8.8, Hex bolt M6X12IS040178.8
46	060509253	1	CABLE ASSY., Earth cable HOCHFLExIBEL KENN-NR.13523
47	06501380	1	WASHER, CUP, Wave washer spring B8DIN137FST

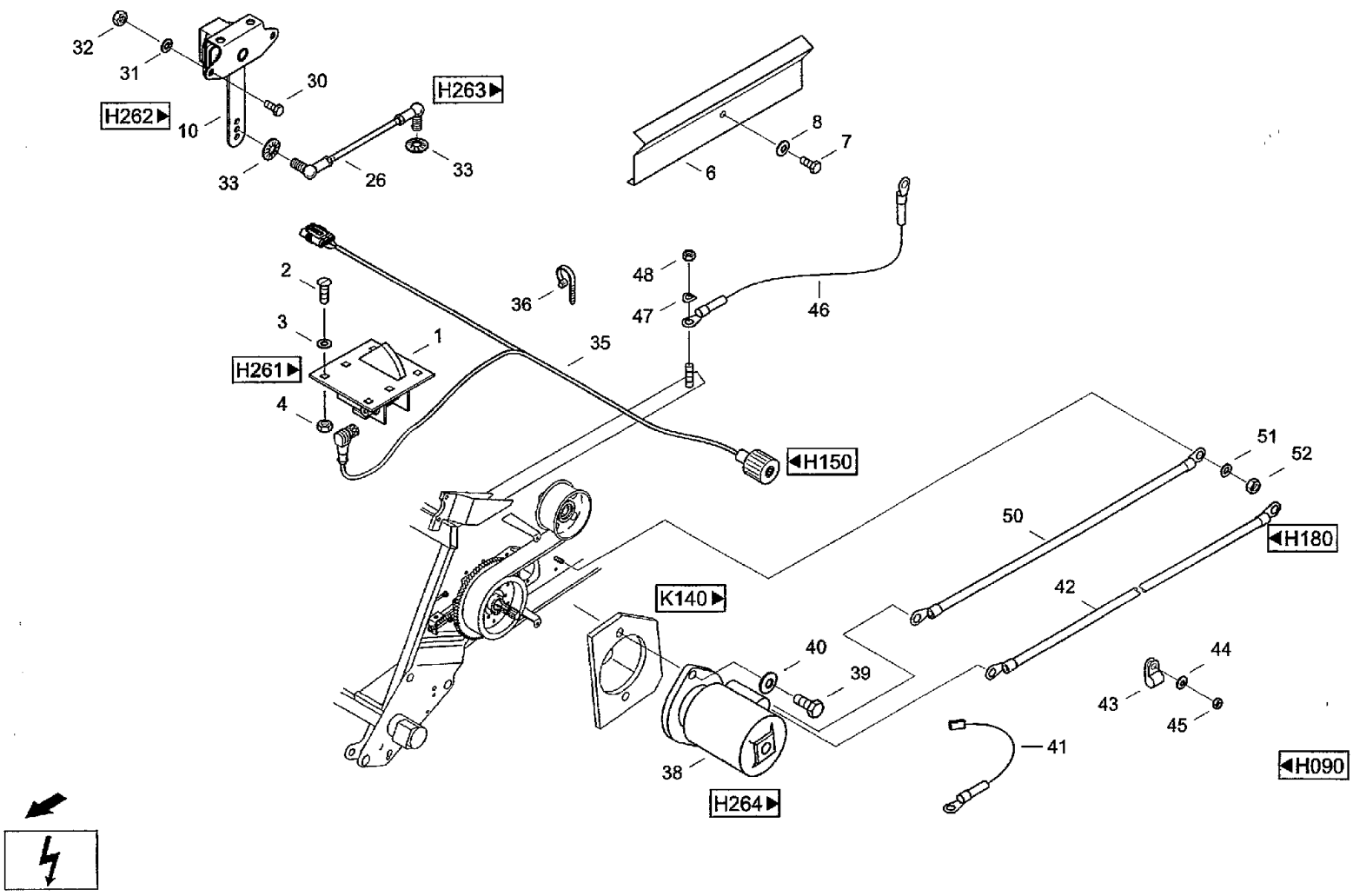
32
31
30
H263
H262
10
33
26
33
8
7
6
2
36
48
47
46
3
1
35
H261
4
H150
51
52
50
H180
K140
42
40
39
44
43
45
41
38
H264
H090

H260(02) ELECTRICAL EQUIPMENT- FEEDER [CF80P]

Ref	Part Number	Qty	Description
48	825-1408	1	NUT, M8, Cl 8,
50	060181986	1	CABLE ASSY., Cable MASSE-ROCKLAUF
51	06501380	1	WASHER, CUP, Wave washer spring B8 DIN 137 FST
52	825-1408	1	NUT, M8, Cl 8,

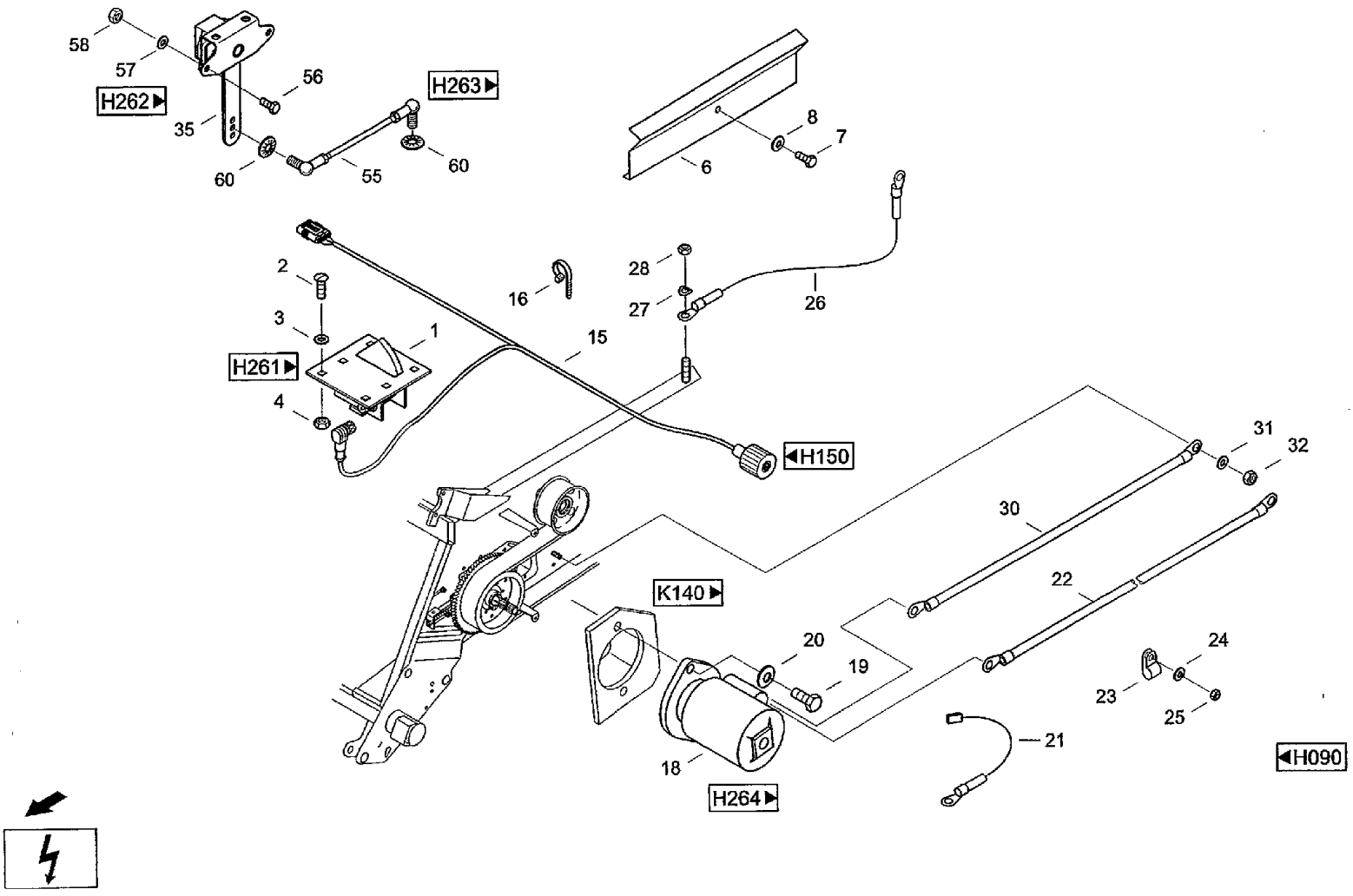
58
57
H262
56
H263
35
60
55
60
6
8
7
2
3
H261
4
1
16
15
28
27
26
H150
31
32
30
22
K140
20
19
18
H264
24
23
25
21
H090

CF80 CASE IH CROSS FLOW COMBINE

H260(03) ELECTRICAL EQUIPMENT- FEEDER [CF80Q]

Ref	Part Number	Qty	Description
1	061075838	1	SWITCH, Crop switch
2	7751242	6	Flat-round-head screw M6x16 DIN603 8.8
3	06577036	6	WASHER, SPECIAL, Locking washer M6
4	825-1406	6	NUT, M6, Cl 8,
6	31287604	1	CABLE SHEATH., Cable protection
7	614-8016	1	BOLT, Hex, M8 x 16, 8.8,
8	06577028	1	WASHER, SPECIAL, Locking washer M8
15	07090424	1	HARNESS, Cable SCHACHT
16	060152467	1	CABLE, Cable band PLT-2S-M30 871 1305 4.8X188 MM
18	060165777	1	MOTOR, STARTER, Armature 24V
19	614-12025	2	BOLT, Hex, M12 x 25, 8.8, Hex bolt M12x25 ISO4017 8.8
20	06577011	2	PLATE, LOCKING, Locking washer M12
21	060061585	1	LINE, Line 30-50
22	061010043	1	HARNESS, Cable MOTOR-ROCKLAUF
23	060526703	5	CLAMP, Pipe clip D1-13x15W1-1 DIN3016
24	06577036	5	WASHER, SPECIAL, Locking washer M6
25	614-6012	5	BOLT, Hex, M6 x 12, 8.8, Hex bolt M6x12 ISO4017 8.8
26	060509253	1	CABLE ASSY., Earth cable HOCHFLExIBEL KENN-NR.13523
27	06501380	1	WASHER, CUP, Wave washer spring B8DIN137FST
28	825-1408	1	NUT, M8, Cl 8,
30	060181986	1	CABLE ASSY., Cable MASSE-ROCKLAUF
31	06501380	1	WASHER, CUP, Wave washer spring B8DIN137FST
32	825-1408	1	NUT, M8, Cl 8,
35	31346921	1	SENSOR, Sender Querpendel
55	31314594	1	ROD, CONNECTING, Pushrod 1-Sw

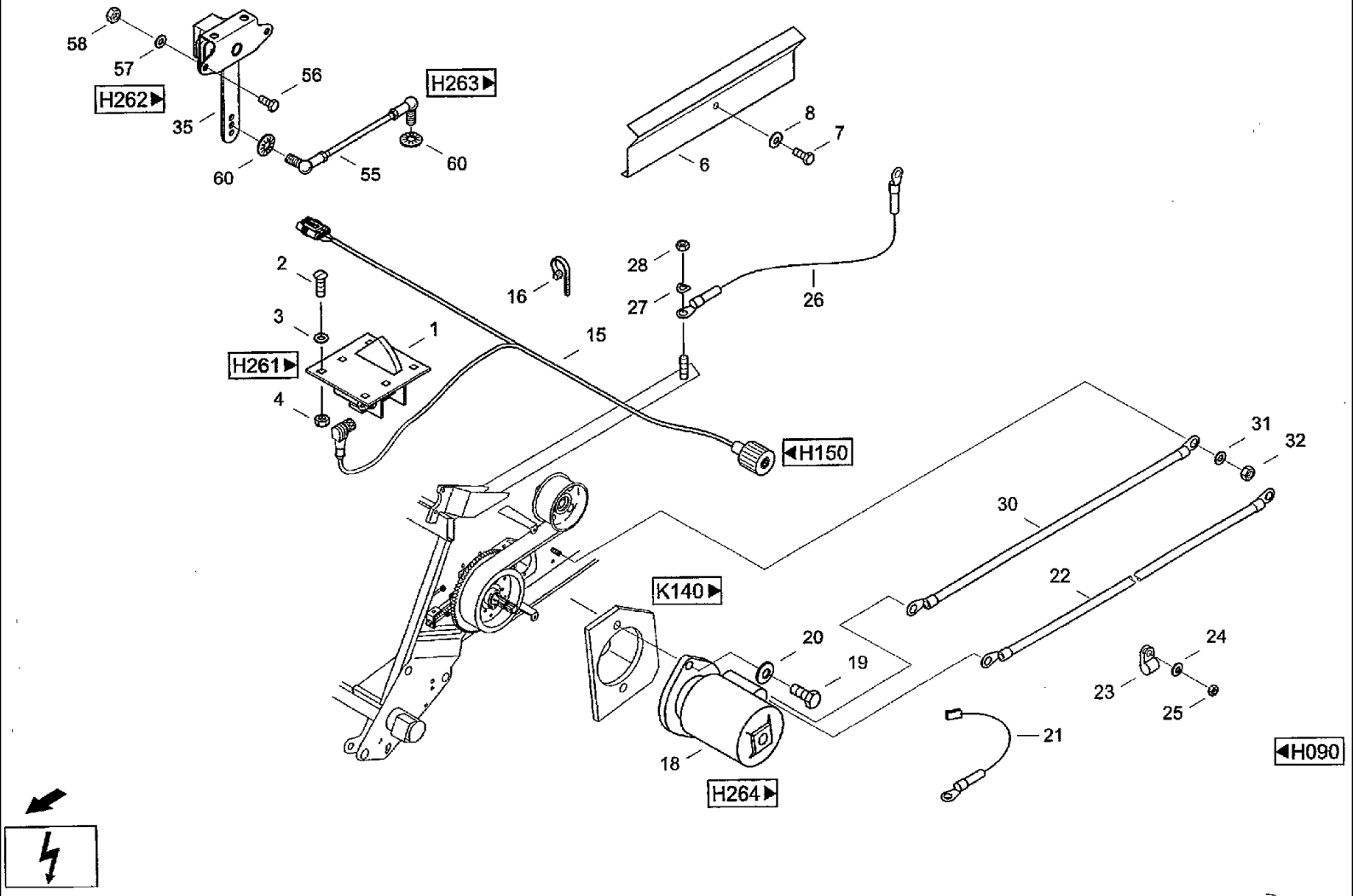
58
57
H262
56
H263
35
60
55
60
6
8
7
2
16
28
27
26
3
1
15
H261
4
H150
31
32
30
K140
22
20
19
24
23
25
21
18
H264
H090

CF80 CASE IH CROSS FLOW COMBINE

H260(04) ELECTRICAL EQUIPMENT- FEEDER [CF80Q]

Ref	Part Number	Qty	Description
56	614-5012	2	SCREW, Hex, M5 x 12, 8.8, Full Thd, Hex bolt M5x12IS040178.8
57	97022007	2	SNAP RING, Locking ring VSK5 DIN
58	825-1405	2	NUT, M5, Cl 8, Hex nut M5 ISO4032 8
60	06577036	4	WASHER, SPECIAL, Locking washer M6

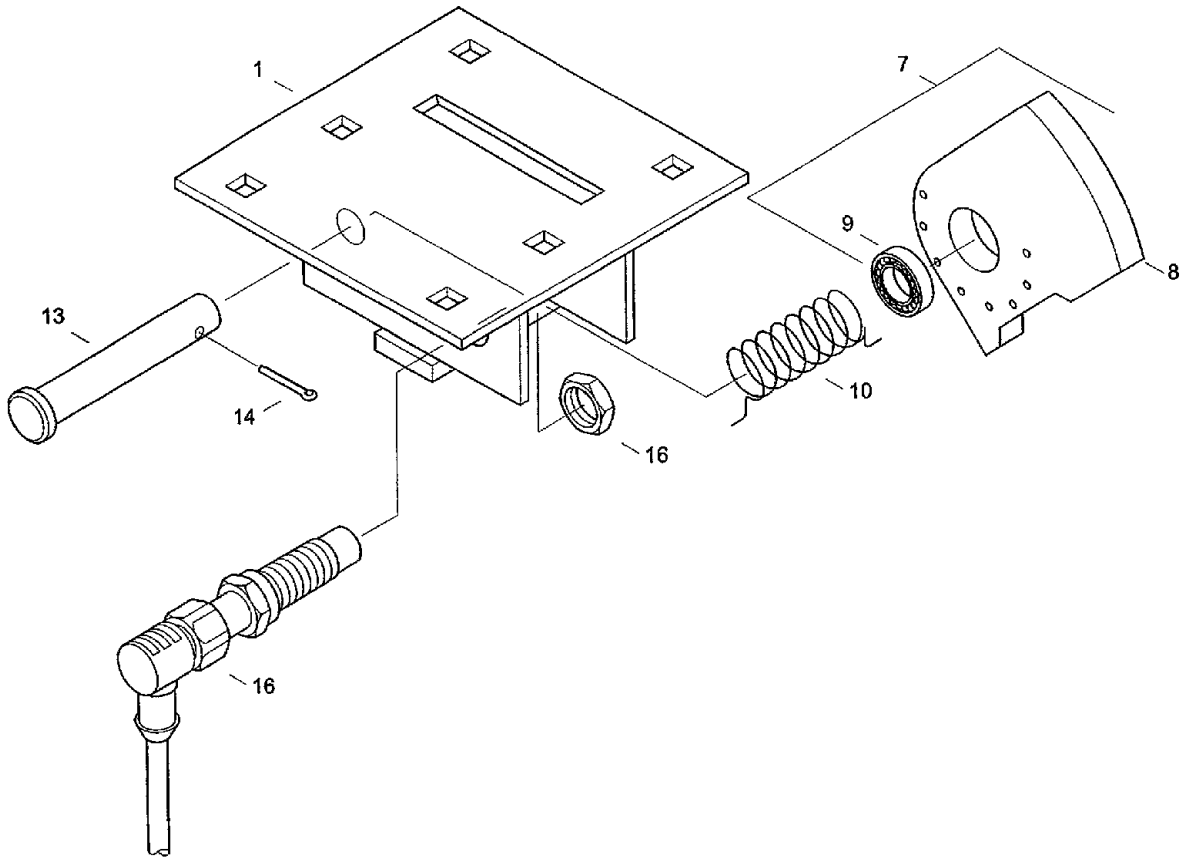

H260

CF80 CASE IH CROSS FLOW COMBINE

H261 ELECTRICAL EQUIPMENT- SWITCH, CROP

Ref	Part Number	Qty	Description
1	061078881	1	BODY, Base body
7	060056932	1	LEVER, Feeler lever
8	060056998	1	LEVER, Feeler lever
9	03661791	1	BEARING, BALL, Grooved ball bearing 6000-2RS-C3 DIN625
10	060057000	1	SPRING, Bending spring
13	060057105	1	PIN, LARGE, Bolt
14	97032425	1	PIN, SPLIT (COTTER), Splint pin 3,2x1 6/ST-A3C DIN94
16	060533518	1	SENSOR, Sender NI8U-EM12-AN4X-H1 141/S372

H262(01) ELECTRICAL EQUIPMENT- SENDER, TRACKING [CF80P]

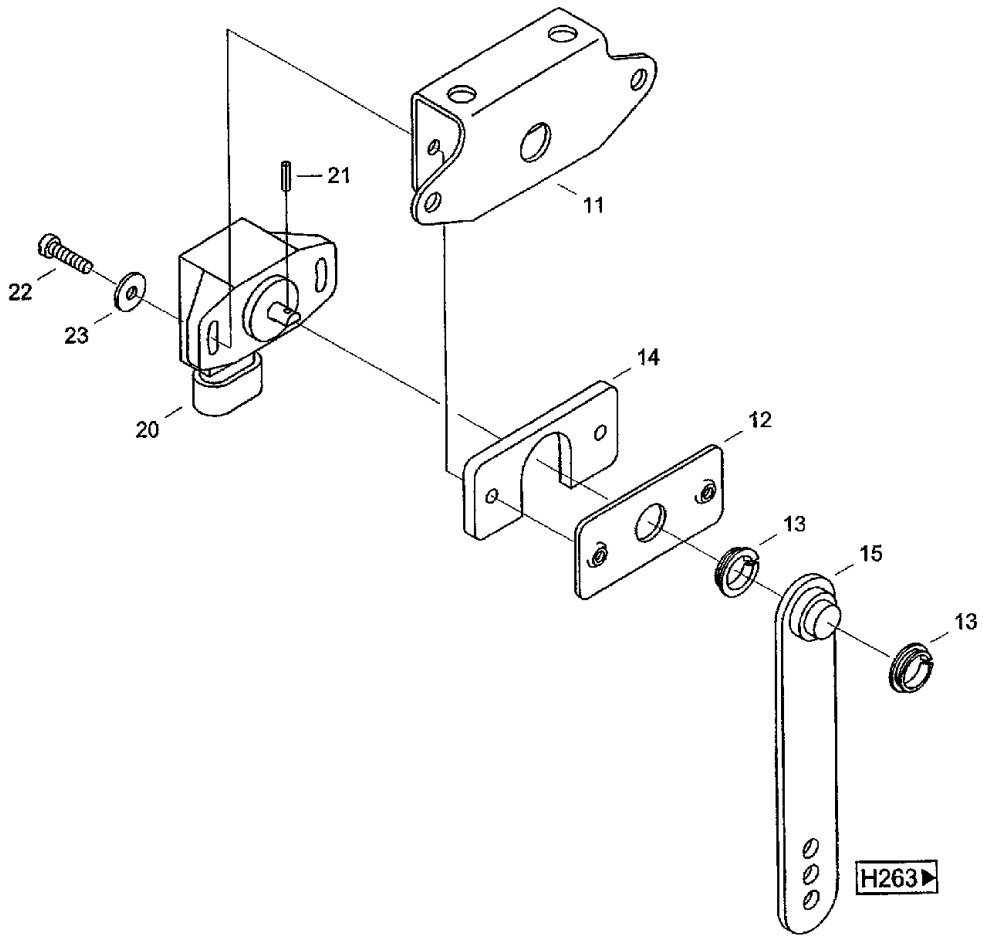

CF80 CASE IH CROSS FLOW COMBINE

H262(01) ELECTRICAL EQUIPMENT- SENDER, TRACKING [CF80P]

Ref	Part Number	Qty	Description
11	31343701	1	PLATE, Base plate
12	31343718	1	PLATE, Plate with thread
13	060531524	2	BEARING, Bearing MCM-12-02
14	31343726	1	PLATE, Spacer plate
15	31346962	1	LEVER ASSY., Lever k
20	060533591	1	SENSOR, Angle sensor 424B10A050
21	06144681	1	PIN, Notched dowel 2x10 DIN 1 473 ST
22	06007698	2	SCREW, Cheese-head screw M4X16DIN844.8
23	06510035	2	WASHER, Washer 4,3 DIN9021 140HV

H262(02) ELECTRICAL EQUIPMENT- SENDER, TRACKING [CF80Q]

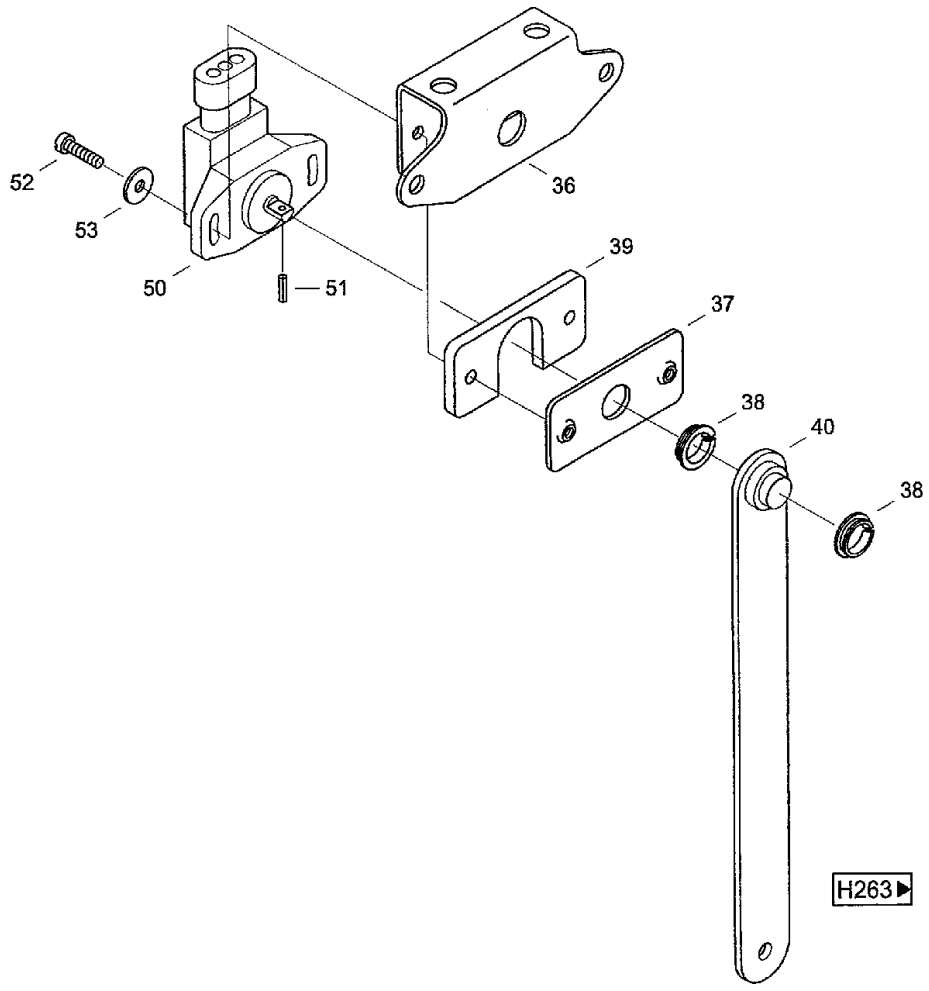

H263▶

◀H260

CF80 CASE IH CROSS FLOW COMBINE

H262(02) ELECTRICAL EQUIPMENT- SENDER, TRACKING [CF80Q]

Ref	Part Number	Qty	Description
36	31343701	1	PLATE, Base plate
37	31343718	1	PLATE, Plate with thread
38	060531524	2	BEARING, Bearing MCM-12-02
39	31343726	1	PLATE, Spacer plate
40	31346938	1	LEVER ASSY., Lever k
50	07091111	1	POINTER, Angle sensor
51	06144681	1	PIN, Notched dowel 2x10DIN1473ST
52	06007698	2	SCREW, Cheese-head screw M4x16DIN844.8
53	06510035	2	WASHER, Washer 4,3 DIN9021 140HV

H263(03) ELECTRICAL EQUIPMENT- PUSHROD [CF80P]

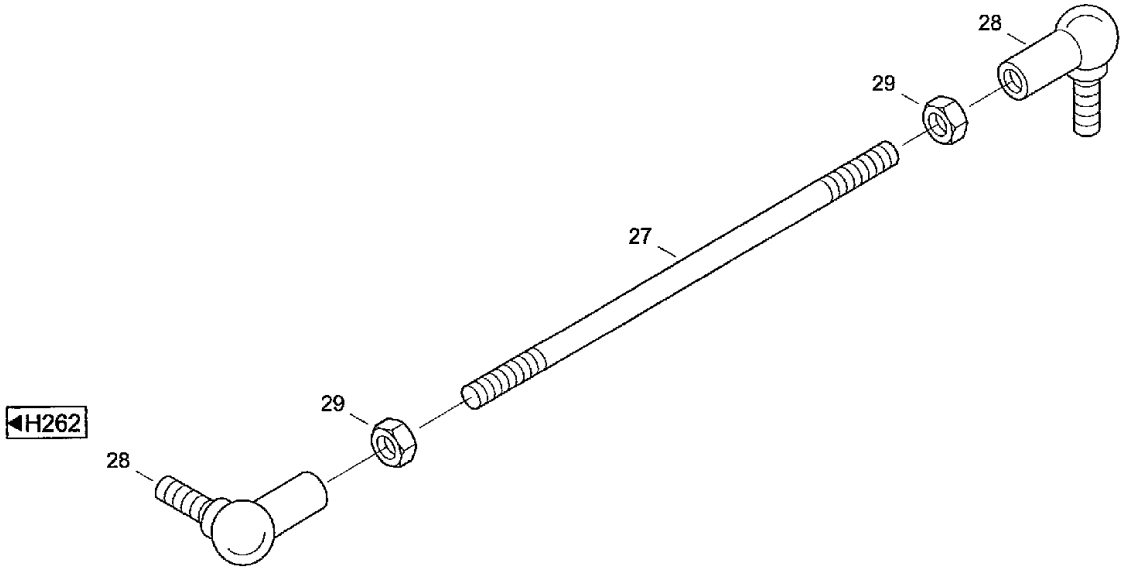

◀H262

◀H260

CF80 CASE IH CROSS FLOW COMBINE

H263(03) ELECTRICAL EQUIPMENT- PUSHROD [CF80P]

Ref	Part Number	Qty	Description
27	31292884	1	TENSIONER, Through bolt
28	060501832	2	JOINT, Angle joint
29	825-1406	2	NUT, M6, Cl 8,

H263(04) ELECTRICAL EQUIPMENT- PUSHROD [CF80Q]

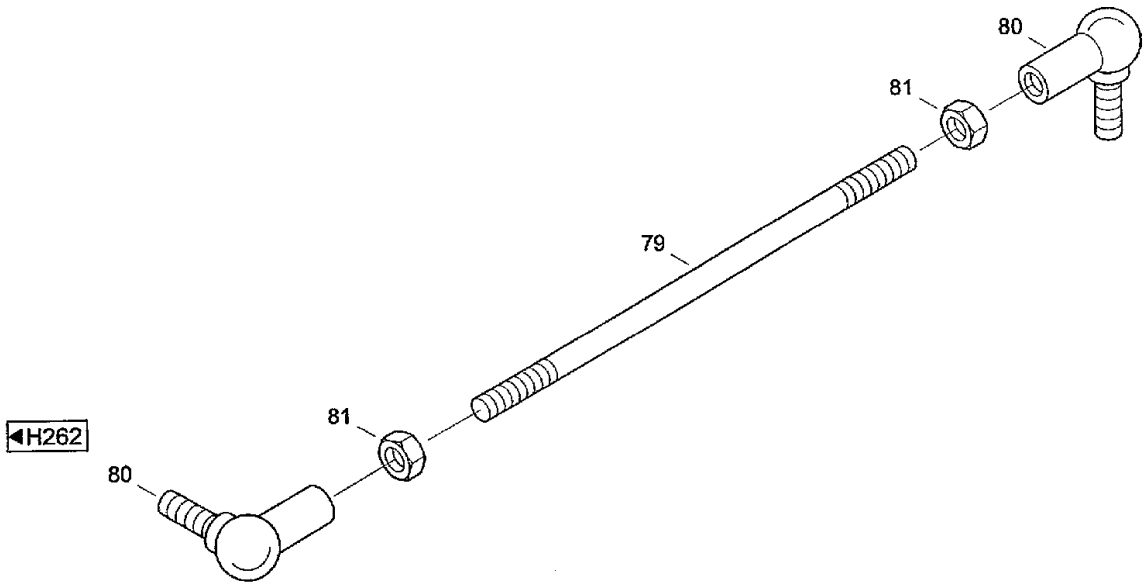

◀H262

◀H260

CF80 CASE IH CROSS FLOW COMBINE

H263(04) ELECTRICAL EQUIPMENT- PUSHROD [CF80Q]

Ref	Part Number	Qty	Description
79	31314600	1	THREADED ROD, Through bolt 1
80	060501832	2	JOINT, Angle joint CSL10-A3CDIN71802
81	825-1406	2	NUT, M6, Cl 8,

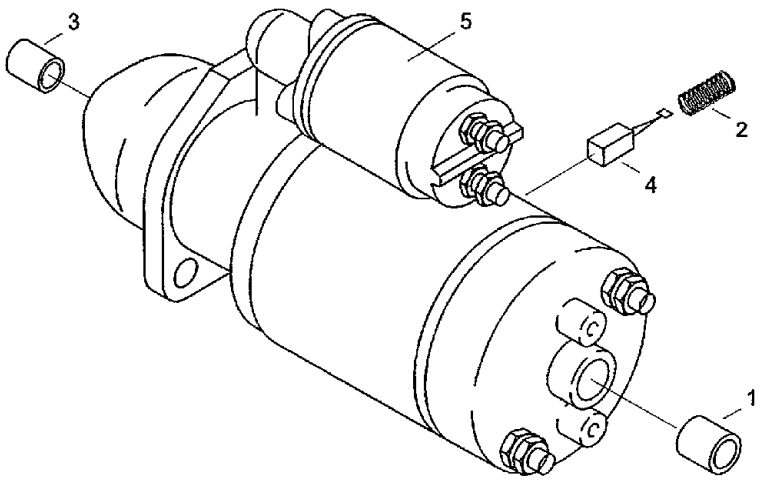

◀H260
P&Q

CF80 CASE IH CROSS FLOW COMBINE

H264 ELECTRICAL EQUIPMENT- ARMATURE [24V]

Ref	Part Number	Qty	Description
1	060502698	1	BUSHING, LARGE, Bush 0
2	060502704	4	SPRING, COMPRESSION, Pressure spring
3	060502712	1	BUSHING, LARGE, Bush 43
4	060502720	1	SET, BRUSHES, Brush, set 63
5	060502737	1	RELAY, Relay

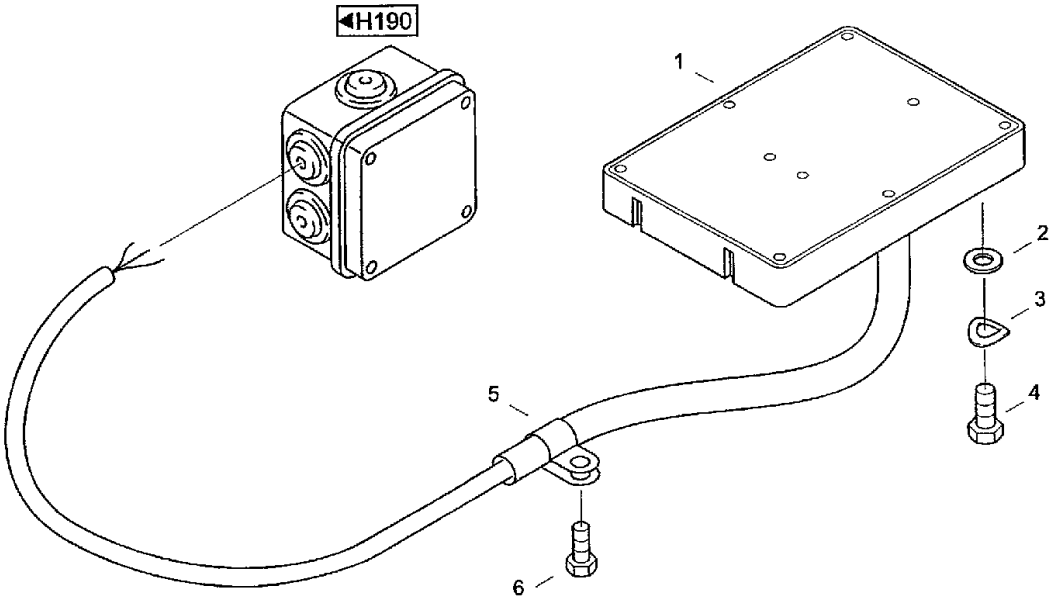

H090

CF80 CASE IH CROSS FLOW COMBINE

H270 ELECTRICAL EQUIPMENT- STRAW WALKERS

Ref	Part Number	Qty	Description
1	060506837	2	PROBE, Sensor LH-NR.12-907-012
2	895-11006	8	WASHER, M6, Washer 6,4DIN125ST
3	06501397	8	WASHER, SPRING, Wave washer spring B6DIN137FST
4	614-6016	8	BOLT, Hex, M6 x 16, 8.8,
5	060506845	2	CLAMP, Pipe clip LH-NR. 12-801 -856 RSGU1.12/15W1
6	060506853	2	SCREW, Screw 6,3x19 B2 LH-NR.12-8 26-620

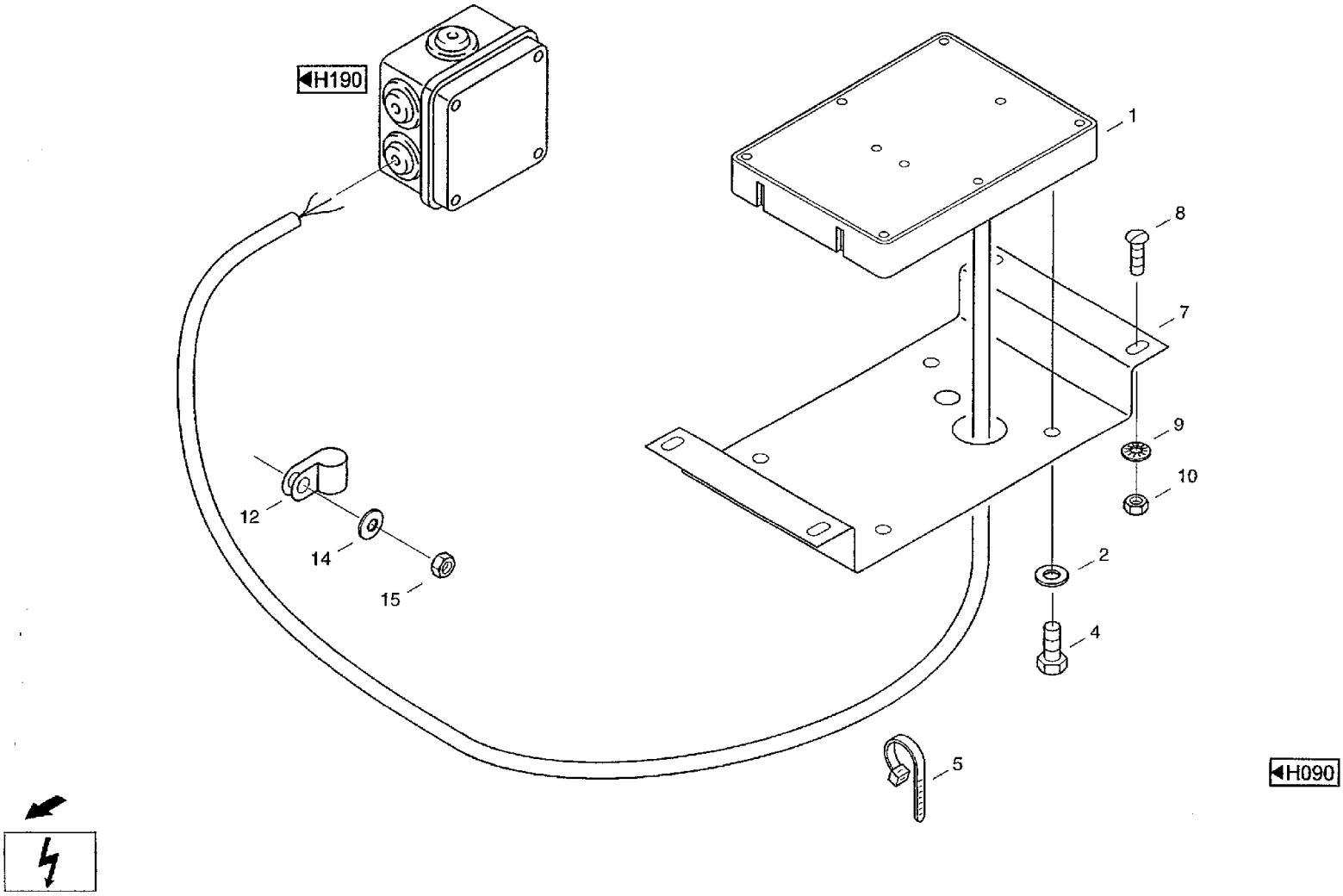
H190
1
8
7
9
10
2
4
5
12
14
15
H090

CF80 CASE IH CROSS FLOW COMBINE

H280 ELECTRICAL EQUIPMENT- CLEANING

Ref	Part Number	Qty	Description
1	060506837	2	PROBE, Sensor LH-NR.12-907-012
2	06577036	8	WASHER, SPECIAL, Locking washer M6
4	614-6016	8	BOLT, Hex, M6 x 16, 8.8,
5	07070043	18	CABLE, Cable band 250x4,8 TSL-250-S
7	072068104	2	SUPPORT, Bracket VERL-GEBER H200-05.01.001 КРОНШТЕЙН
8	060512216	8	SCREW, Flat-round-head screw M6x16-A3C CN 20 0152 BENR. 636
9	06577036	8	WASHER, SPECIAL, Locking washer M6
10	825-1406	8	NUT, M6, Cl 8,
12	060506845	2	CLAMP, Pipe clip LH-NR.12-801-856 RSGU1.12/15W1
14	06577036	1	WASHER, SPECIAL, Locking washer M6
15	825-1406	1	NUT, M6, Cl 8,

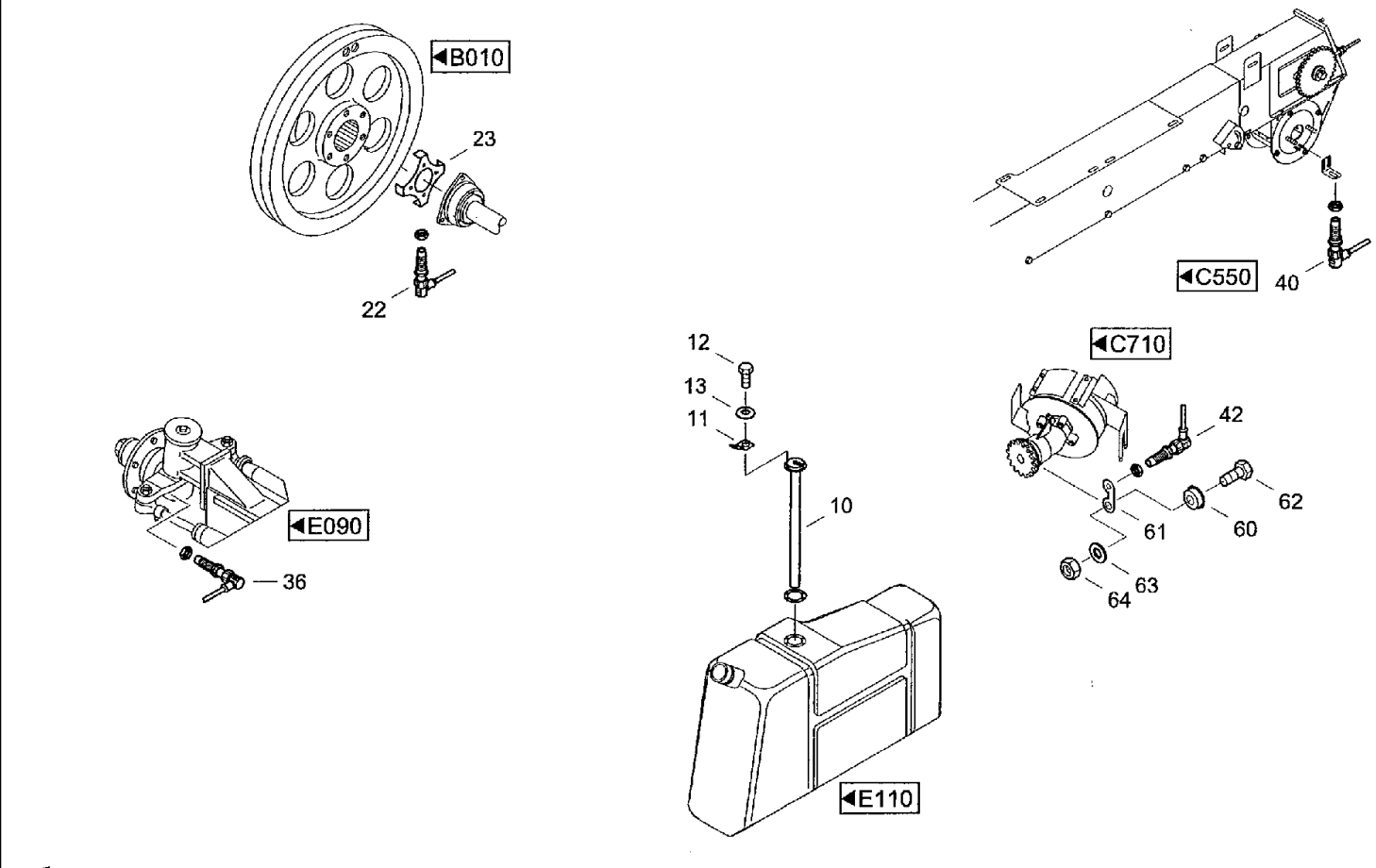
B010
23
22
C550
40
C710
42
62
61
60
63
64
12
13
11
10
E110
E090
36
H090

CF80 CASE IH CROSS FLOW COMBINE

H290(01) ELECTRICAL EQUIPMENT- MEASURING POINT

Ref	Part Number	Qty	Description
10	07091136	1	PROBE, DK sender
11	31340852	1	ADAPTER, Adapter
12	31316313	1	SEAL WASHER, Seal
13	614-6020	6	BOLT, Hex, M6 x 20, 8.8, Hex bolt M6x20 ISO4017 8.8
14	06577036	6	WASHER, SPECIAL, Locking washer M6
22	060533518	1	SENSOR, Sender NI8U-EM12-AN4X-H1 141/S372
23	061071207	1	DISC, Meas. Disc DTR.
28	060533518	1	SENSOR, Sender NI8U-EM12-AN4X-H1 141/S372
30	060533518	1	SENSOR, Sender NI8U-EM12-AN4X-H1 141/S372
31	061071192	1	ANGLE, Angle Sut
32	614-6010	2	BOLT, Hex, M6 x 10, 8.8, Full Thd, Hex bolt M6x10ISO40178.8
33	06577036	2	WASHER, SPECIAL, Locking washer M6
34	6708513	3	Clip 36A3C
36	060533518	1	SENSOR, Sender NI8U-EM12-AN4X-H1 141/S372
40	060533518	1	SENSOR, Sender NI8U-EM12-AN4X-H1 141/S372
42	060533518	1	SENSOR, Sender NI8U-EM12-AN4X-H1 141/S372
45	060533518	1	SENSOR, Sender NI8U-EM12-AN4X-H1 141/S372
46	061075805	1	DISC, Meas. Disc STR.
47	614-10020	1	BOLT, Hex, M10 x 20, 8.8, Full Thd,
48	06577052	1	WASHER, SPECIAL, Locking washer B10
49	060533518	1	SENSOR, Sender NI8U-EM12-AN4X-H1 141/S372
50	061075805	1	DISC, Meas. Disc
51	614-10020	1	BOLT, Hex, M10 x 20, 8.8, Full Thd,
52	06577052	1	WASHER, SPECIAL, Locking washer B10
53	060533518	1	SENSOR, Sender NI8U-EM12-AN4X-H1 141/S372

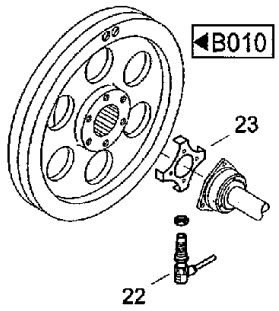
B010
23
22

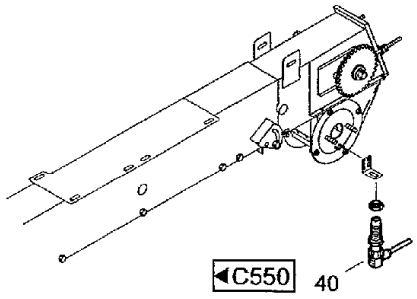
C550
40

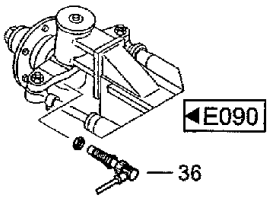
E090
36

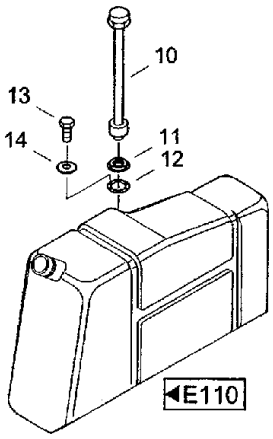
10
13
14
11
12
E110

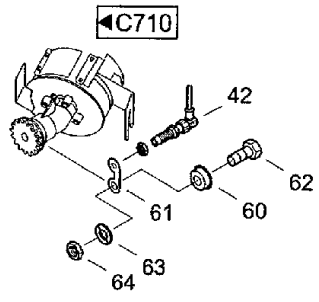
C710
42
62
61
60
64
63

H090

CF80 CASE IH CROSS FLOW COMBINE

H290(02) ELECTRICAL EQUIPMENT- MEASURING POINT

Ref	Part Number	Qty	Description
10	07091136	1	PROBE, DK sender
11	31340852	1	ADAPTER, Adapter
12	31316313	1	SEAL WASHER, Seal
13	614-6020	6	BOLT, Hex, M6 x 20, 8.8, Hex bolt M6X20IS040178.8
14	06577036	6	WASHER, SPECIAL, Locking washer M6
22	060533518	1	SENSOR, Sender NI8U-EM12-AN4X-H1 141/S372
23	061071207	1	DISC, Meas. Disc DTR.
28	060533518	1	SENSOR, Sender NI8U-EM12-AN4x-H1 141/S372
30	060533518	1	SENSOR, Sender NI8U-EM12-AN4X-H1 141/S372
31	061071192	1	ANGLE, Angle SCtt
32	614-6010	2	BOLT, Hex, M6 x 10, 8.8, Full Thd, Hex bolt M6x10 ISO4017 8.8
33	06577036	2	WASHER, SPECIAL, Locking washer M6
34	6708513	3	Clip 36A3C
36	060533518	1	SENSOR, Sender NI8U-EM12-AN4X-H1 141/S372
40	060533518	1	SENSOR, Sender NI8U-EM12-AN4X-H1 141/S372
42	060533518	1	SENSOR, Sender NI8U-EM12-AN4X-H1 141/S372
45	060533518	1	SENSOR, Sender NI8U-EM12-AN4X-H1 141/S372
46	061075805	1	DISC, Meas. Disc SIR.
47	614-10020	1	BOLT, Hex, M10 x 20, 8.8, Full Thd,
48	06577052	1	WASHER, SPECIAL, Locking washer B10
49	060533518	1	SENSOR, Sender NI8U-EM12-AN4X-H1 141/S372
50	061075805	1	DISC, Meas. Disc
51	614-10020	1	BOLT, Hex, M10 x 20, 8.8, Full Thd,
52	06577052	1	WASHER, SPECIAL, Locking washer B10
53	060533518	1	SENSOR, Sender NI8U-EM12-AN4X-H1 141/S372

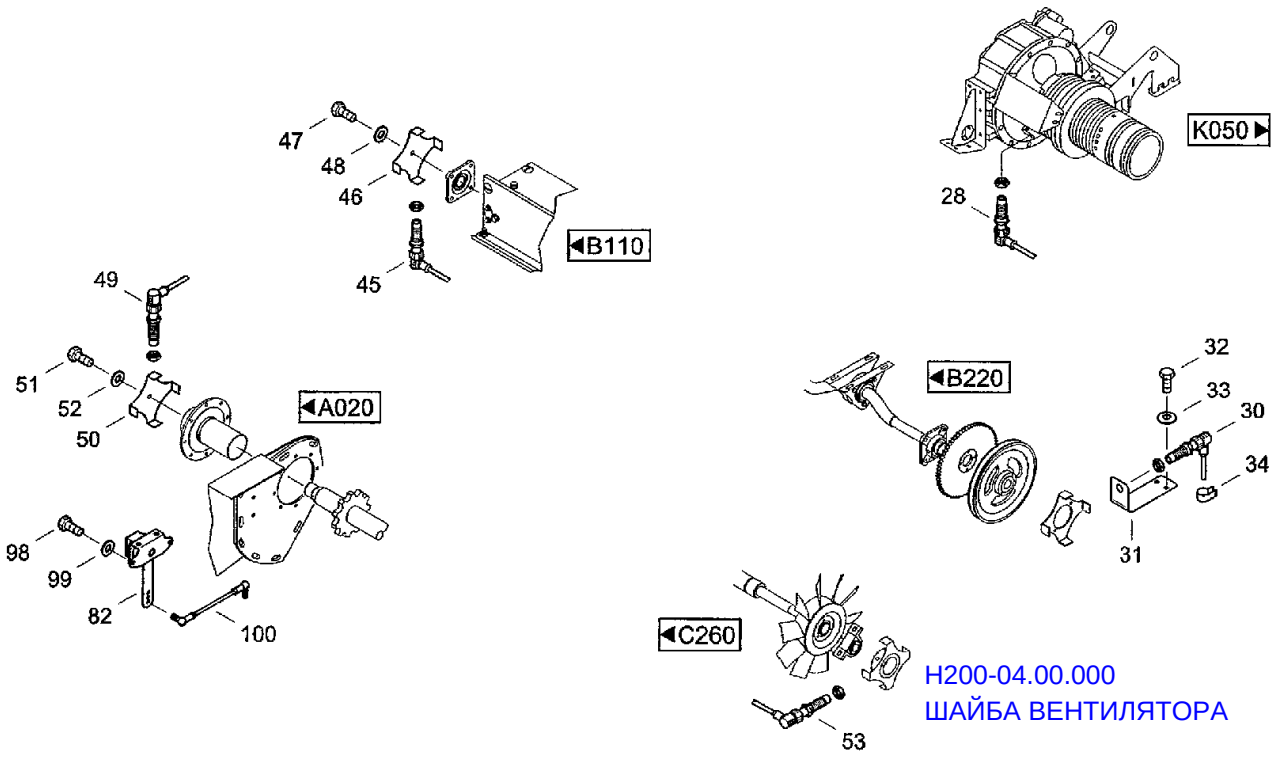

H200-04.00.000
ШАЙБА ВЕНТИЛЯТОРА

H090

CF80 CASE IH CROSS FLOW COMBINE

H290(03) ELECTRICAL EQUIPMENT- MEASURING POINT

Ref	Part Number	Qty	Description
60	31315587	1	SLEEVE, Sleeve
61	31315595	1	SUPPORT, Sensor bracket
62	614-8025	1	BOLT, Hex, M8 x 25, 8.8,
63	06577044	1	WASHER, SPECIAL, Locking washer B8
64	825-1408	1	NUT, M8, Cl 8,
82	31340998	1	SENSOR, Sender Schachthohe
98	614-5012	2	SCREW, Hex, M5 x 12, 8.8, Full Thd, Hex bolt M5x12IS040178.8
99	97022007	2	SNAP RING, Locking ring VSK5 DIN
100	061076180	1	ROD, Pushrod

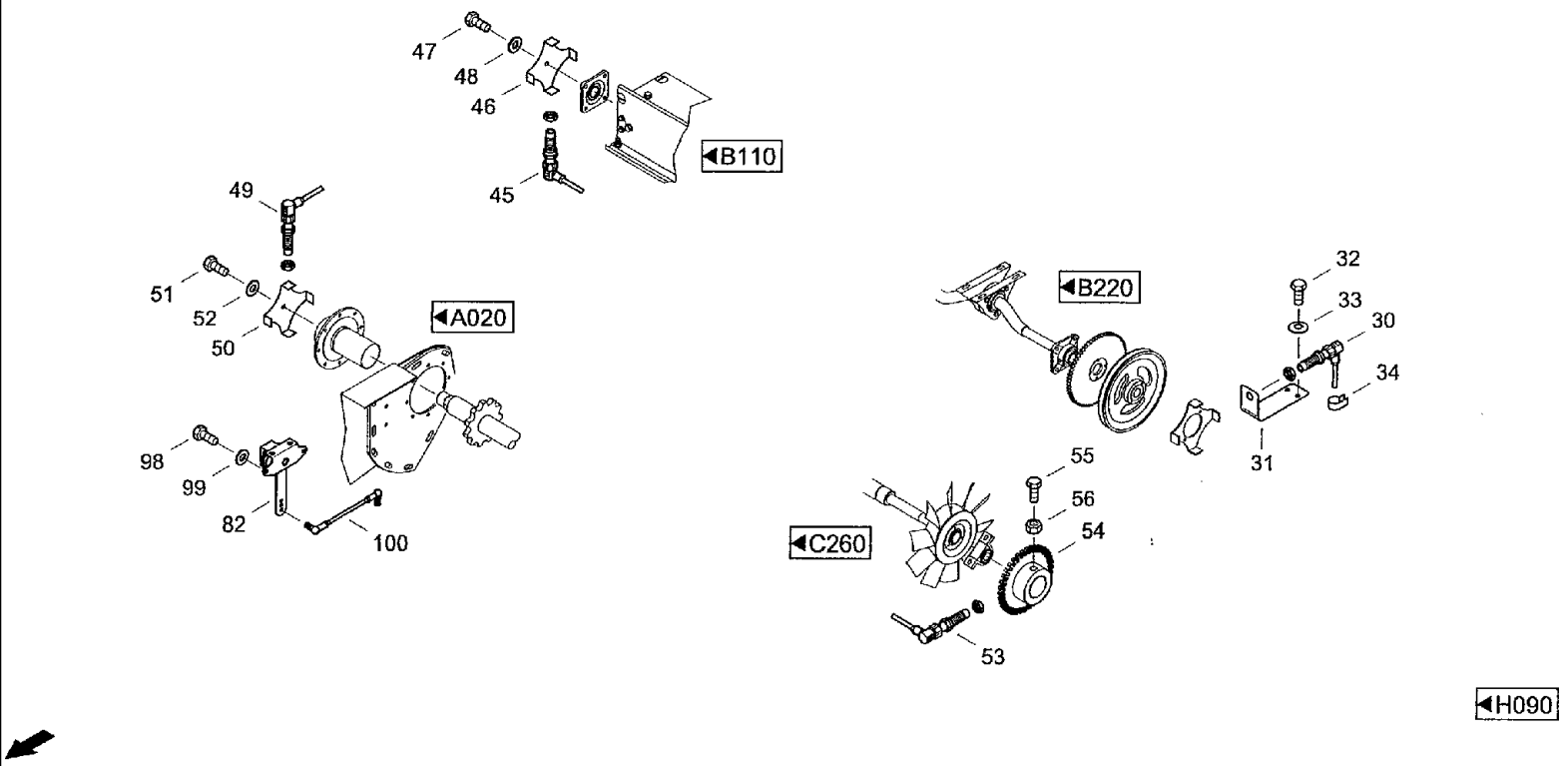
47
48
46
45
B110
49
51
52
50
A020
98
99
82
100
B220
32
33
30
34
31
55
56
54
C260
53
H090

CF80 CASE IH CROSS FLOW COMBINE

H290(04) ELECTRICAL EQUIPMENT- MEASURING POINT [CF80K]

Ref	Part Number	Qty	Description
10	060521305	1	TRANSMITTER, Sender MOTOMETER-NR.608. 010.1023
11	060523018	1	TERMINAL, SPADE, Flat plug
12	614-6012	6	BOLT, Hex, M6 x 12, 8.8, Hex bolt M6x12ISO40178.8
13	06577036	6	WASHER, SPECIAL, Locking washer M6
22	060533518	1	SENSOR, Sensor NI8U-EM12-AN4X-H1 141/S372
23	061071207	1	DISC, Meas. Disc Dtr
30	060533518	1	SENSOR, Sensor NI8U-EM12-AN4X-H1 141/S372
31	061071192	1	ANGLE, Angle Silt
32	614-6010	2	BOLT, Hex, M6 x 10, 8.8, Full Thd, Hex bolt M6x10ISO40178.8
33	06577036	2	WASHER, SPECIAL, Locking washer M6
34	67085130	3	Clip 36A3C
36	060533518	1	SENSOR, Sensor NI8U-EM12-AN4X-H1 141/S372
40	060533518	1	SENSOR, Sensor NI8U-EM12-AN4X-H1 141/S372
42	060533518	1	SENSOR, Sensor NI8U-EM12-AN4X-H1 141/S372
45	060533518	1	SENSOR, Sensor NI8U-EM12-AN4X-H1 141/S372
46	061075805	1	DISC, Meas. Disc Str H200-00.00.001 КРЫЛЬЧАТКА
47	614-10020	1	BOLT, Hex, M10 x 20, 8.8, Full Thd,
48	06577052	1	WASHER, SPECIAL, Locking washer B10
49	060533518	1	SENSOR, Sensor NI8U-EM12-AN4X-H1 141/S372
50	061075805	1	DISC, Meas. Disc Str
51	614-10020	1	BOLT, Hex, M10 x 20, 8.8, Full Thd,
52	06577052	1	WASHER, SPECIAL, Locking washer B10
53	07078464	1	SENSOR, Speed sensor HDB18/12
54	072068178	1	WASHER, Push disk H200-04.00.000 ШАЙБА ВЕНТИЛЯТОРА
55	614-10020	1	BOLT, Hex, M10 x 20, 8.8, Full Thd,

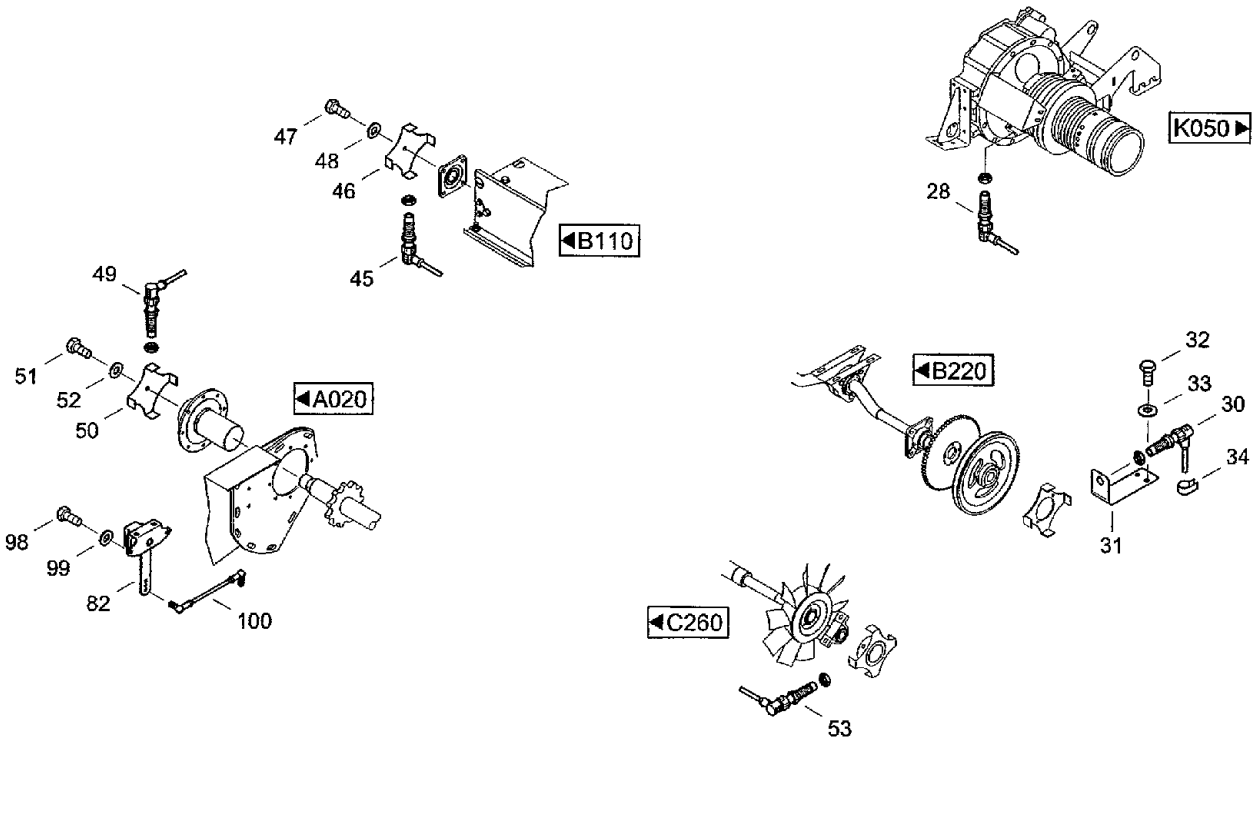
47
48
46
45
◀B110
49
51
52
50
◀A020
98
99
82
100
28
K050▶
◀B220
32
33
30
34
31
◀C260
53
◀H090

CF80 CASE IH CROSS FLOW COMBINE

H290(05) ELECTRICAL EQUIPMENT- MEASURING POINT [CF80K]

Ref	Part Number	Qty	Description
56	829-4410	1	NUT, Thin, M10 x 1.5, Cl 05, Hex nut M10 ISO4035 05
60	31315587	1	SLEEVE, Sleeve
61	31315595	1	SUPPORT, Sensor bracket
62	614-8025	1	BOLT, Hex, M8 x 25, 8.8,
63	06577044	1	WASHER, SPECIAL, Locking washer B8
64	825-1408	1	NUT, M8, Cl 8,
82	31340998	1	SENSOR, Sender Schachthohe
98	614-5012	2	SCREW, Hex, M5 x 12, 8.8, Full Thd, Hex bolt M5x12ISO40178.8
99	97022007	2	SNAP RING, Locking ring VSK5 DIN
100	061076180	1	ROD, Pushrod

H291(01) ELECTRICAL EQUIPMENT- SENDER, FEEDER HOUSING HEIGHT [CF80P]

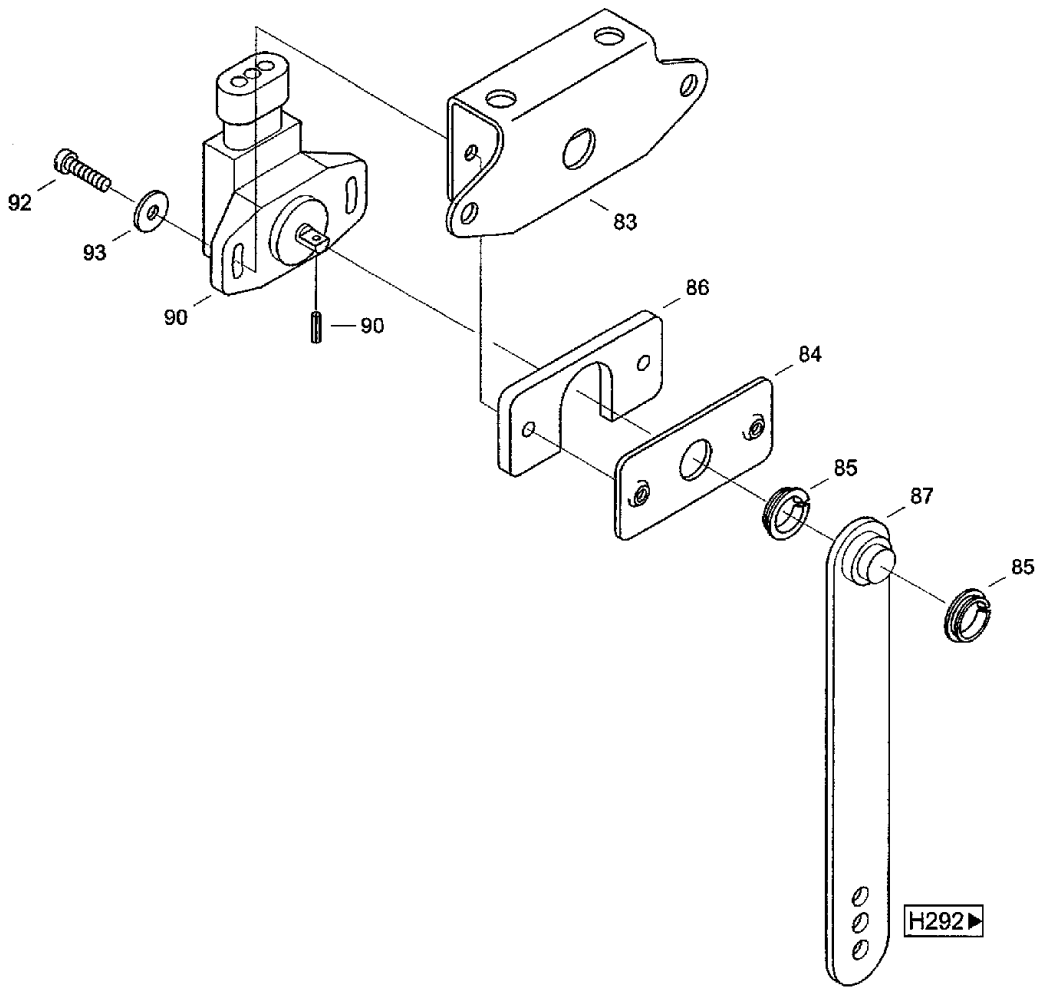

◀H290

CF80 CASE IH CROSS FLOW COMBINE

H291(01) ELECTRICAL EQUIPMENT- SENDER, FEEDER HOUSING HEIGHT [CF80P]

Ref	Part Number	Qty	Description
83	31343701	1	PLATE, Base plate
84	31343718	1	PLATE, Plate with thread
85	060531524	2	BEARING, Bearing MCM-12-02
86	31343726	1	PLATE, Spacer plate
87	31341000	1	LEVER ASSY., Lever k
90	060533591	1	SENSOR, Angle sensor 424B10A050
91	06144681	1	PIN, Notched dowel 2x10DIN1473ST
92	06007698	2	SCREW, Cheese-head screw M4x16DIN844.8
93	06510035	2	WASHER, Washer 4,3 DIN9021 140HV

H291(02) ELECTRICAL EQUIPMENT- SENDER, FEEDER HOUSING HEIGHT [CF80Q]

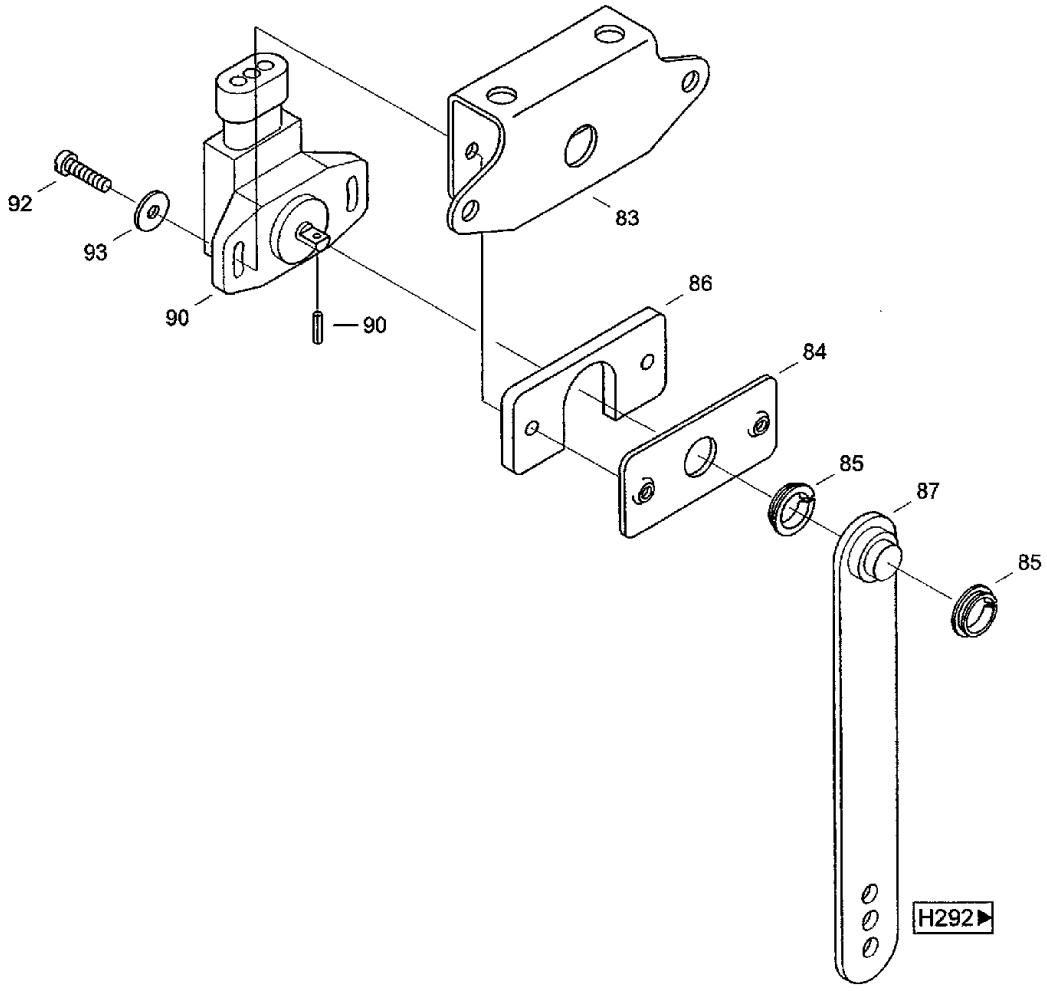

◀H290

CF80 CASE IH CROSS FLOW COMBINE

H291(02) ELECTRICAL EQUIPMENT- SENDER, FEEDER HOUSING HEIGHT [CF80Q]

Ref	Part Number	Qty	Description
83	31343701	1	PLATE, Base plate
84	31343718	1	PLATE, Plate with thread
85	060531524	2	BEARING, Bearing MCM-12-02
86	31343726	1	PLATE, Spacer plate
87	31341000	1	LEVER ASSY., Lever k
90	07087943	1	POINTER, Angle sensor
91	06144681	1	PIN, Notched dowel 2x10 DIN 1473 ST
92	06007698	2	SCREW, Cheese-head screw M4X16DIN844.8
93	06510035	2	WASHER, Washer 4,3 DIN9021 140HV

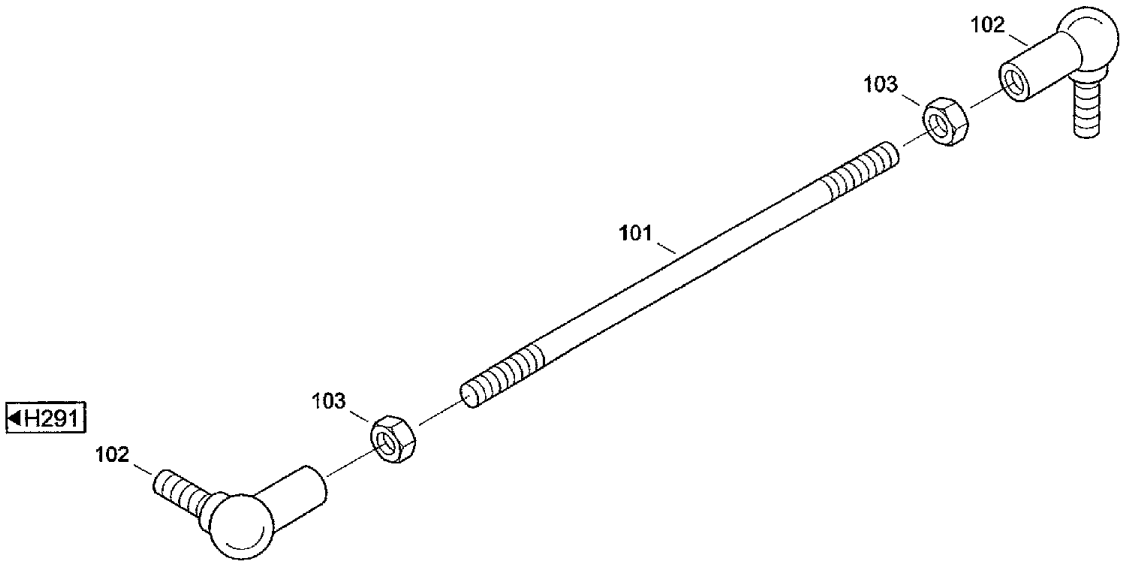

H290

CF80 CASE IH CROSS FLOW COMBINE

H292 ELECTRICAL EQUIPMENT- PUSHROD

Ref	Part Number	Qty	Description
101	061076197	1	THREADED ROD, Through bolt
102	060501832	2	JOINT, Angle joint CSL10-A3CDIN71802
103	825-1406	2	NUT, M6, Cl 8,

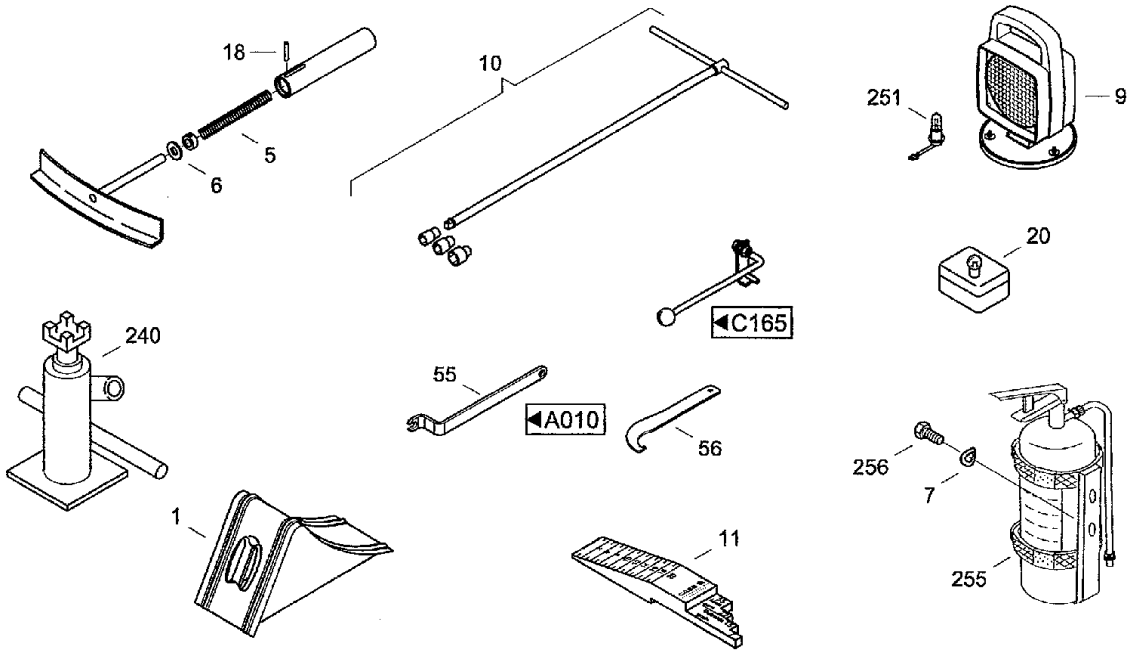
18
10
251
9
5
6
20
C165
240
55
A010
56
256
7
1
11
255

CF80 CASE IH CROSS FLOW COMBINE

J001 COMBINE

Ref	Part Number	Qty	Description
1	060511713	2	WEDGE, Wedge F53 DIN76051TE
5	006705301	1	SPRING, COMPRESSION, Pressure spring A2x14x17,5
6	21424987	1	WASHER, Washer MDW-N 1451 0-9x20x2 ,5-RST
7	06501428	2	WASHER, SPRING, Wave washer spring B10DIN137FST
9	31346905	1	LIGHT, WORK, Work light GHEART.-NR.152.
10	060512064	1	CROSS WRENCH, Nut wrench SATZ
11	061072788	1	SLIDER, Setting gauge
18	006141461	1	DOWEL, Notched dowel 3x20-STDIN1473
20	31290070	1	KIT, Duplicate lamp SORTIMENT
55	31351332	1	WRENCH, SPECIAL, Open end wrench
56	31344421	1	WRENCH, SPECIAL, Wrench hook
240	060507678	1	JACK ASSY., Jack HYDRAULISCH
251	07034997	1	BULB, Filament lamp H3-55W-12VDIN72601
255	03006796	1	FIRE EXTINGUISHER, Fire extinguisher k, PG6 M.KFZ-H ALTER
256	614-10016	2	BOLT, Hex, M10 x 16, 8.8, Full Thd, Hex bolt M10x16ISO40178.8

J002(01) THRASHING DRUM GEAR

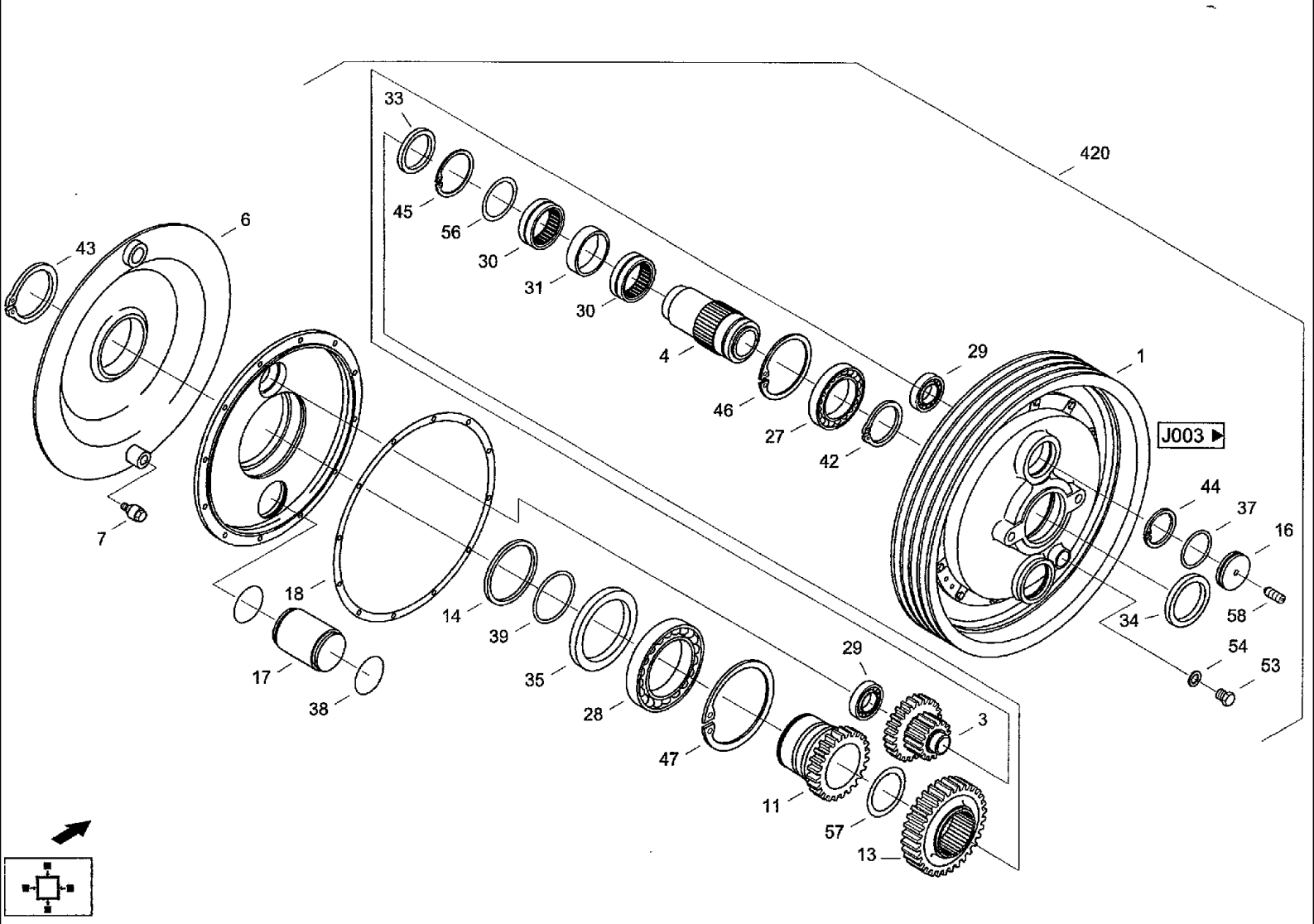

CF80 CASE IH CROSS FLOW COMBINE

J002(01) THRASHING DRUM GEAR

Ref	Part Number	Qty	Description
1	03717131	1	SHEET ASSY., Housing
3	020018268	1	SHAFT, GEAR, Spur gear shaft
4	020018315	1	SHAFT, Quill shaft
6	020018372	1	SPACER, Follower
7	020018147	1	SCREW, Cheese-head screw
11	020018114	1	BUSHING, Spur gear bush
13	020018155	1	PINION, Spur gear
14	020018171	1	BUSHING, Sleeve
16	020018243	1	COVER, Cap
17	020018251	1	SHIM, Differential mass
18	020018130	2	GASKET, Seal
27	03651507	1	BEARING, Grooved ball bearing 6014 DIN625
28	03651628	1	BEARING, Grooved ball bearing 6020 DIN625
29	003665504	2	BEARING, Cylindrical roller bearing NJ2206 DIN5412
30	003676082	2	BEARING, NEEDLE, Needle bearing TGL11553-(K68x76x20)
31	020018331	1	BUSHING, Sleeve
33	001128380	1	SEAL, Shaft seal A60x75x8-NBR DIN3760
34	001129043	1	SEAL, Shaft seal A70x90x10-FPM DIN3760
35	01121807	1	SEAL, Shaft seal A1 10x140x12 DIN3760NBR
37	01133601	1	O-RING, O-ring 56x2-NBR60 DIN3770
38	01134104	2	O-RING, O-ring 65x2-NBR60 DIN3770
39	01139262	1	O-RING, O-ring 80x5-NBR70 DIN3770
42	800-1170	1	RING, SNAP, M70, Ext, Snap ring 70x2,5 DIN471 FST
43	800-1190	1	RING, SNAP, M90, Ext, Snap ring 90x3 DIN471 FST
44	800-2162	1	RING, SNAP, M62, Int, Snap ring 62x2 DIN472 FST

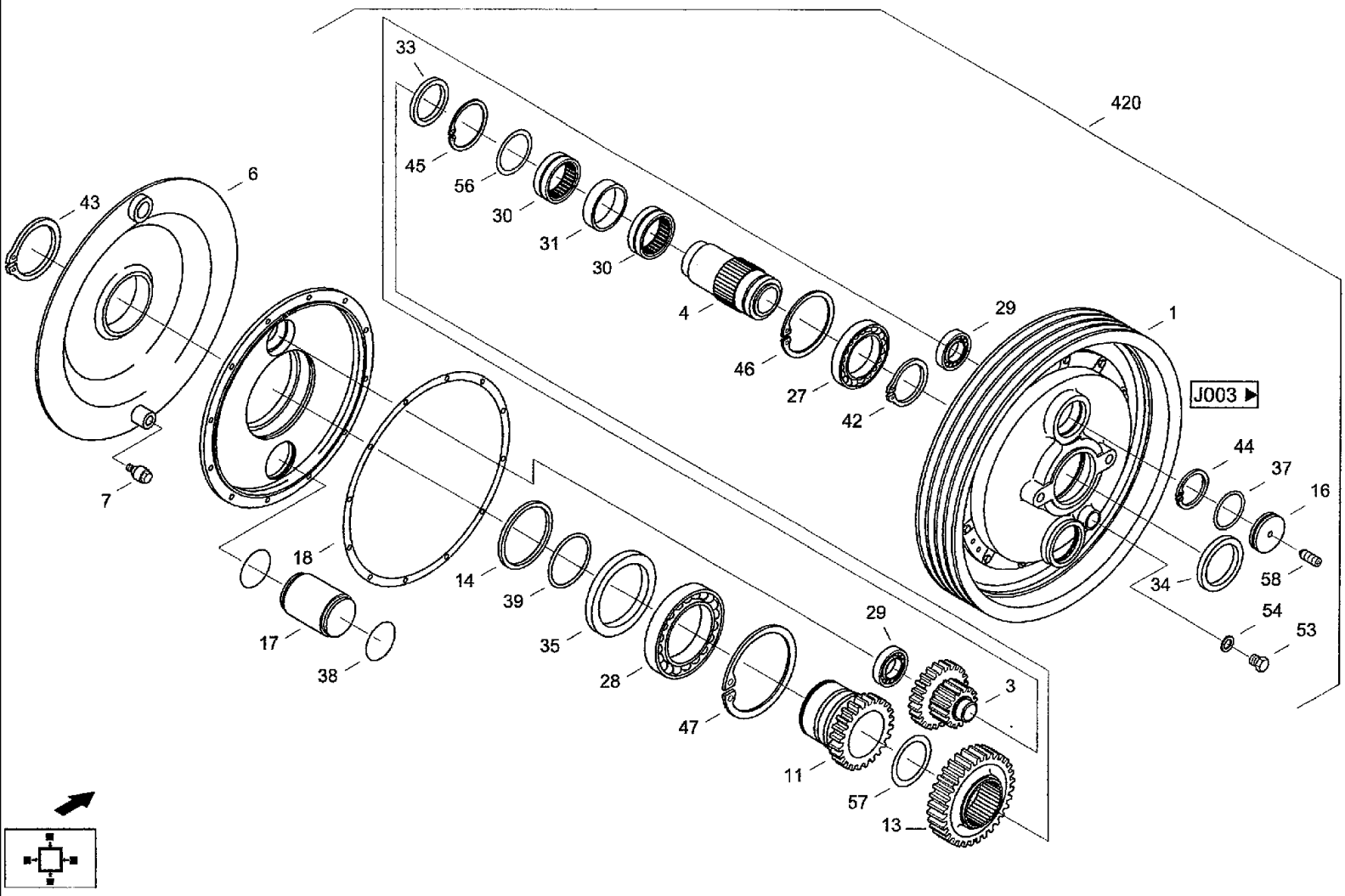
420
33
45
56
30
31
30
4
46
27
42
29
1
J003
44
37
16
58
34
54
53
6
43
7
18
17
38
14
39
35
28
47
29
3
11
57
13

CF80 CASE IH CROSS FLOW COMBINE

J002(02) THRASHING DRUM GEAR

Ref	Part Number	Qty	Description
45	800-2172	1	CIRCLIP, Snap ring 72x2,5 DIN472 FST
46	800-21110	1	RING, SNAP, M110, Int, Snap ring 110X4DIN472FST
47	800-21150	1	SNAP RING, M150, Int, Snap ring 1 50x4 DIN472 FST
53	06103761	1	VANEUM GAUGE, Locking screw CM26x1,5DIN7604ST
54	04100502	1	GASKET, Seal A26x32 DIN7603 AL
56	06625133	1	SHIM, Shim 60x75x1 DIN988
57	97022226	1	SHIM, Shim 65x85x0,5 DIN988
58	006029621	1	PIN, Threaded pin M8x8-14H-A3A ISO4766
420	03717115	1	TRANSMISSION, Threshing cyl. transm.

J003 HOUSING

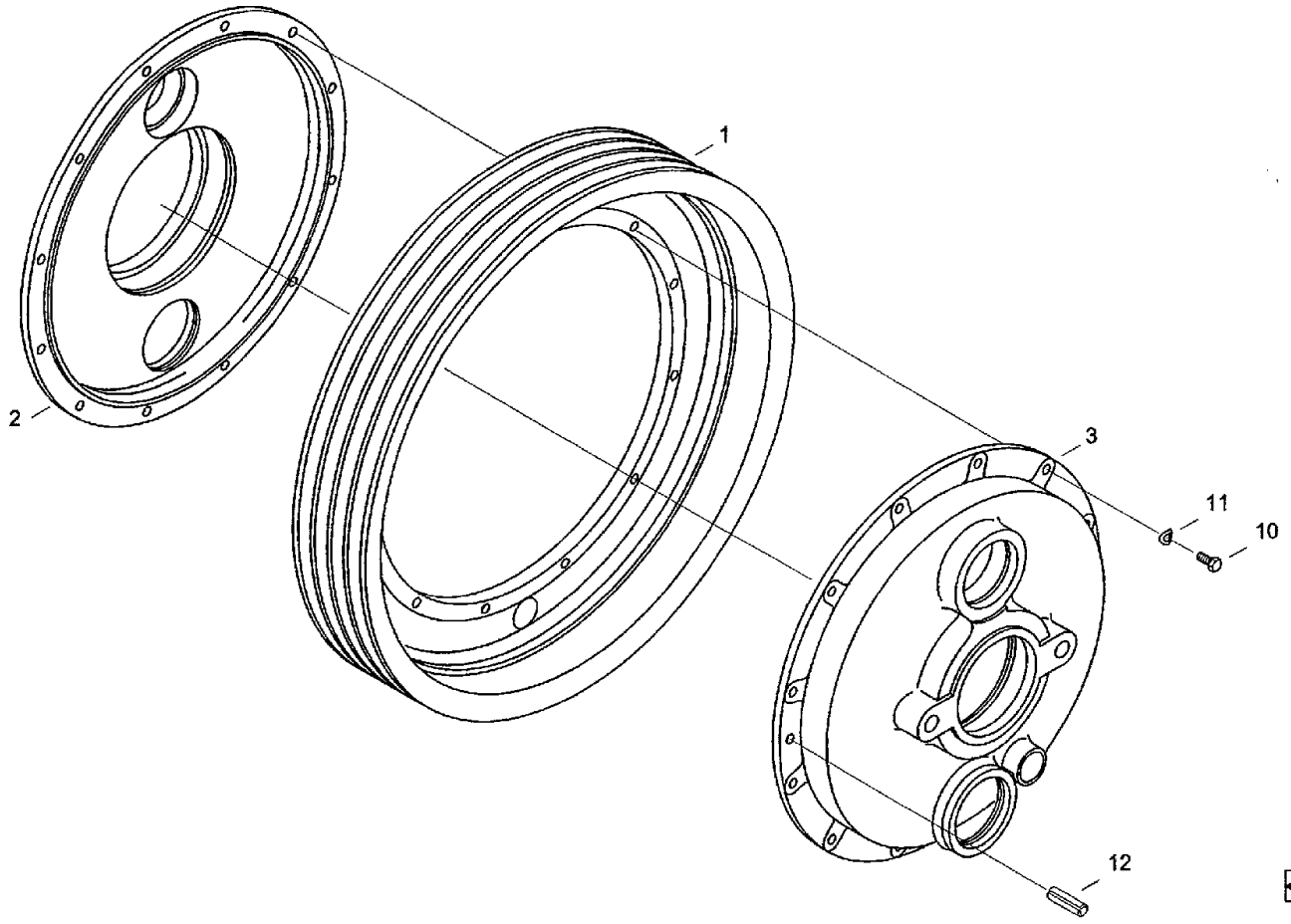

CF80 CASE IH CROSS FLOW COMBINE

J003 HOUSING

Ref	Part Number	Qty	Description
1	03717148	1	PULLEY, V-belt pulley
2	020018067	1	HOUSING, Semi gear case
3	020018083	1	HOUSING, Semi gear case
10	614-8045	12	BOLT, Hex, M8 x 45, 8.8, Full Thd, Hex bolt M8X45ISO40178.8
11	06501380	12	WASHER, CUP, Wave washer spring B8DIN137FST
12	006143865	1	PIN, Notched dowel (8x36)-ST DIN1473

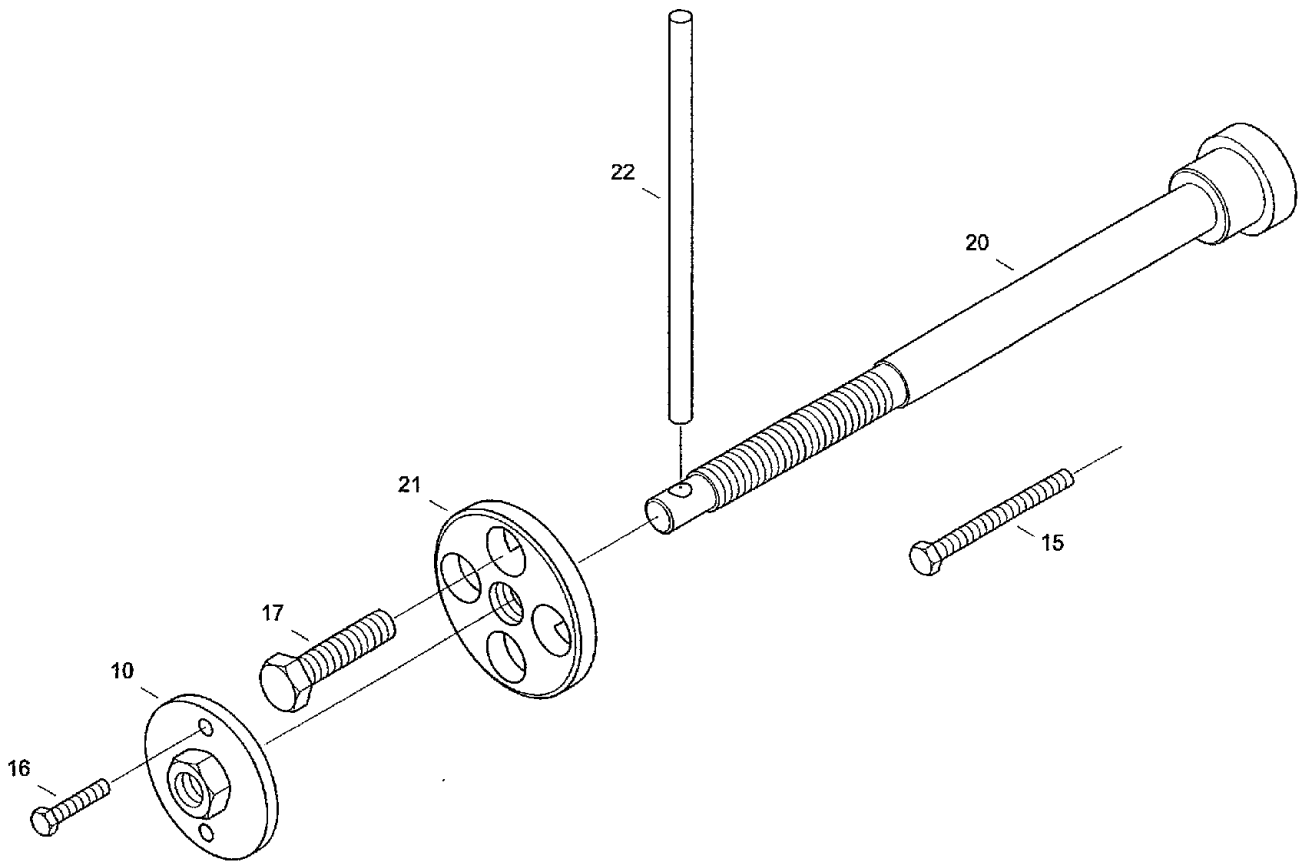
22
20
21
15
17
10
16

CF80 CASE IH CROSS FLOW COMBINE

J007 EXTRACTOR

Ref	Part Number	Qty	Description
10	31290431	1	DISC, Pulling-off disc
15	06303406	2	SCREW, Hex bolt M12x120ISO40178.8
16	06374565	2	SCREW, Hex bolt M10x1x45ISO86768.8
17	06352502	1	SCREW, Hex bolt M20x75 ISO4017 8.8
20	31290247	1	STEM, Spindle
21	31290255	1	STOP, Holder-up
22	009607764	1	PIN, Pin handle A14DIN900 CODE 120610

J010 PERFORATED SIEVE

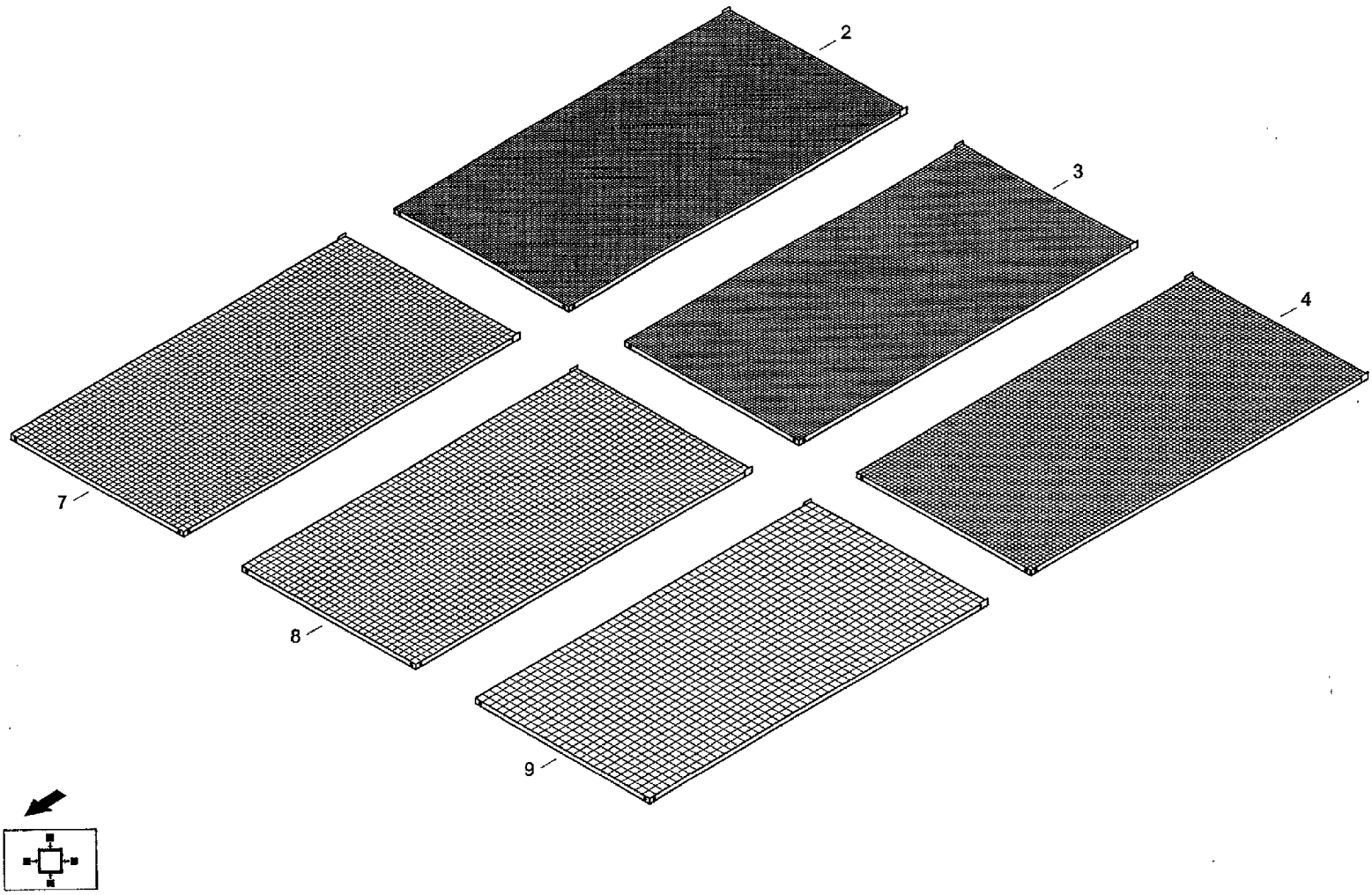

CF80 CASE IH CROSS FLOW COMBINE

J010 PERFORATED SIEVE

Ref	Part Number	Qty	Description
2	31302951	2	SIEVE, GRAIN, Perforated sieve D2.5
3	31302968	2	SIEVE, GRAIN, Perforated sieve D3.0
4	31290608	2	SIEVE, GRAIN, Perforated sieve D4.5
7	31290624	2	SIEVE, GRAIN, Perforated sieve D12
8	31302976	2	SIEVE, GRAIN, Perforated sieve D16
9	061078086	2	SIEVE, GRAIN, Perforated sieve D20

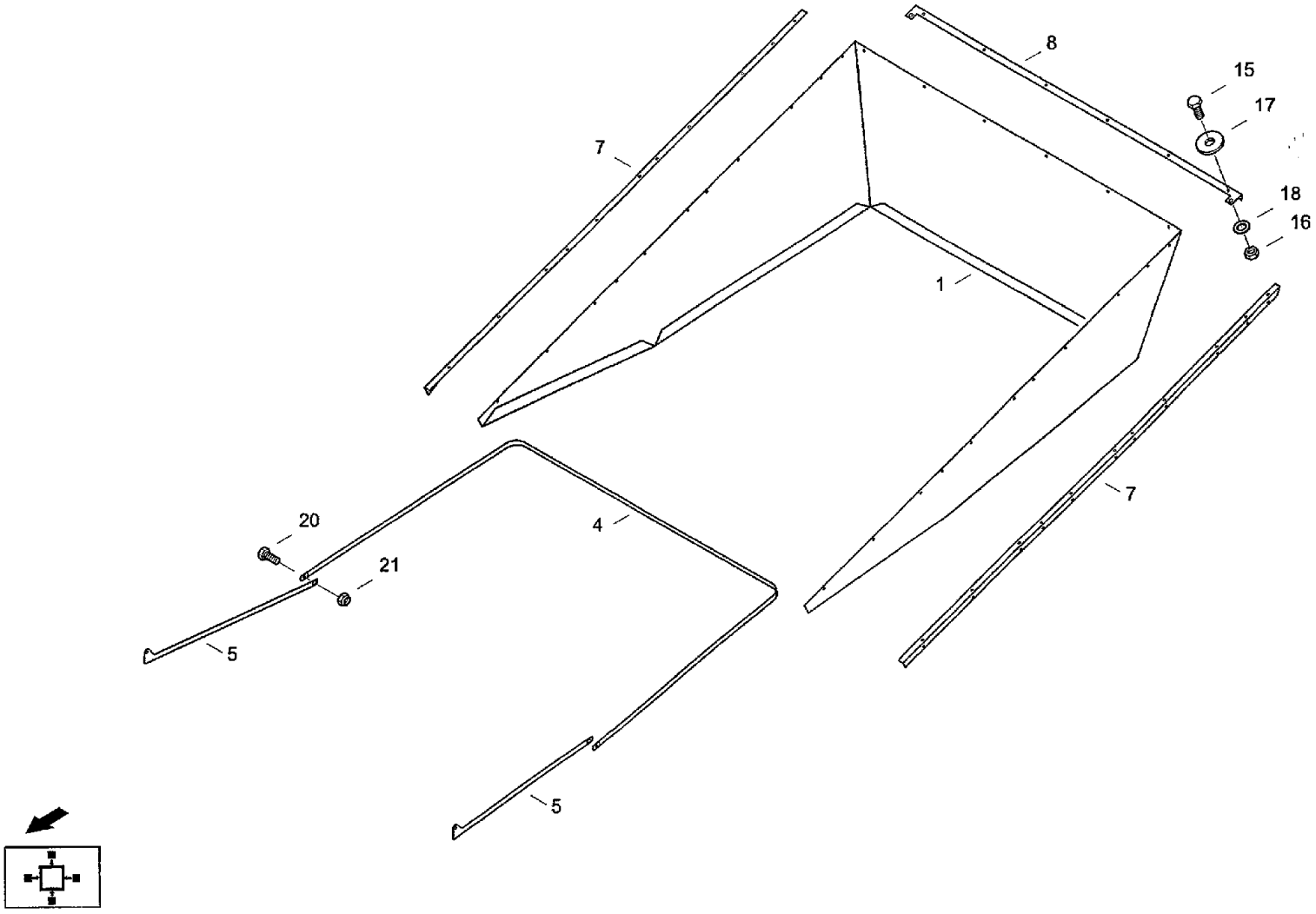
8
15
17
7
18
16
1
7
20
4
21
5
5

CF80 CASE IH CROSS FLOW COMBINE

J020 SWATH FORMER

Ref	Part Number	Qty	Description
1	31298350	1	CANVAS, Cloth
4	060126906	1	BOW, Bracket
5	31298367	2	RAIL, Rail
7	31298375	2	ANGLE BAR, Angle
8	31298383	1	ANGLE BAR, Angle
15	614-8020	6	BOLT, Hex, M8 x 20, 8.8, Hex bolt M8x20ISO40178.8
16	825-1408	9	NUT, M8, Cl 8,
17	895-25008	9	WASHER, M8 x 20 x 1.6, Washer 8,4 DIN9021 140HV
18	06577028	9	WASHER, SPECIAL, Locking washer M8
20	614-8022	4	BOLT, Hex, M8 x 22, 8.8, Full Thd, Hex bolt M8x22ISO40178.8
21	832-10408	4	NUT, M8 x 1.25, Cl 8, Hex nut M8 DIN982 8

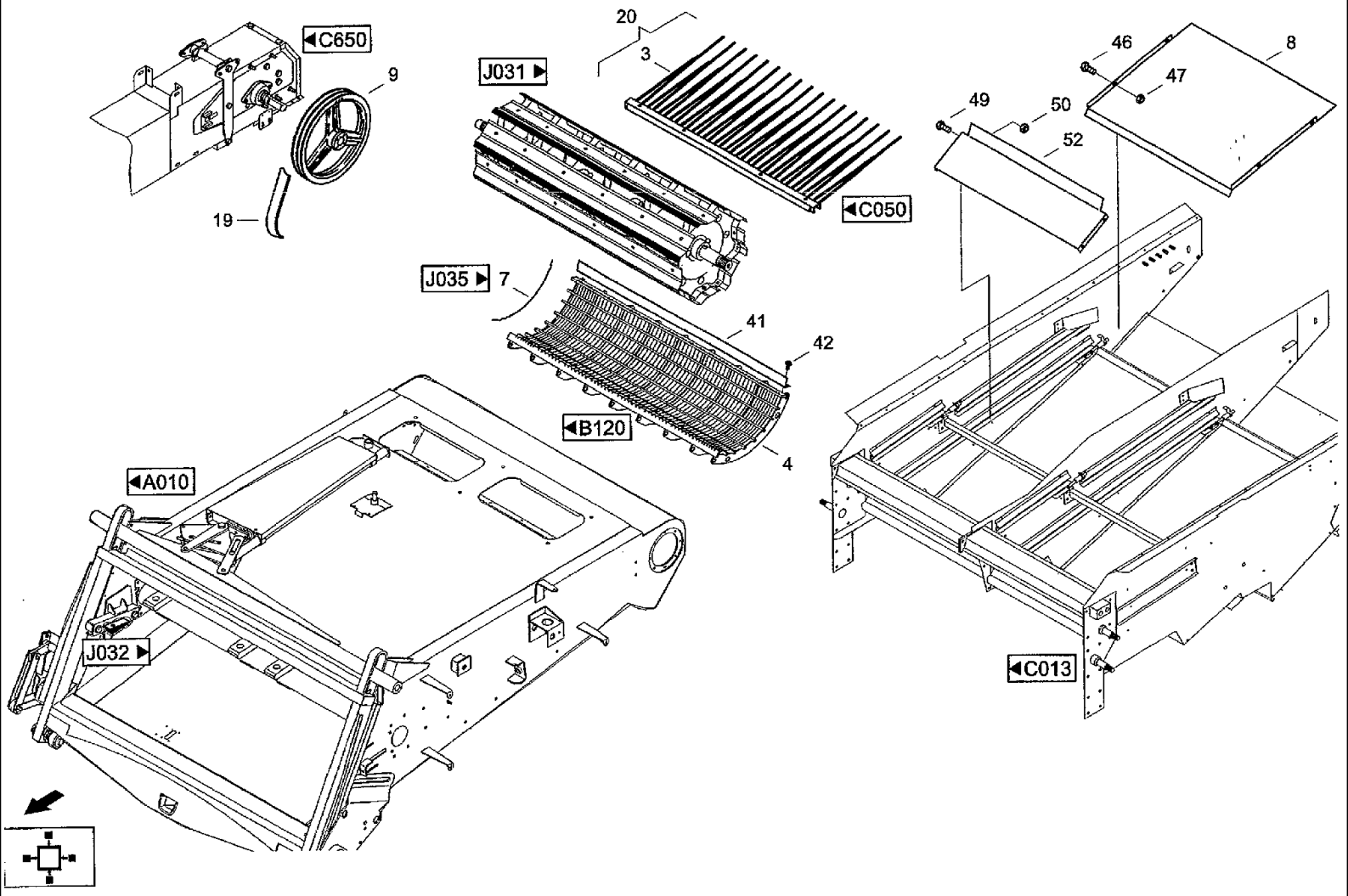
C650
9
19
20
3
J031
C050
J035
7
41
42
B120
4
A010
J032
46
8
47
49
50
52
C013

CF80 CASE IH CROSS FLOW COMBINE

J030 EQUIPMENT, GRAIN MAIZE

Ref	Part Number	Qty	Description
3	061033396	34	TINE, Tine
4	060127298	1	CONCAVE, Concave MAIS
7	020242388	54	WIRE, Concave wire
8	31292570	2	COVER, PROTECTIVE, Cover
9	31294925	1	GROOVED PULLEY, V-belt pulley
19	061009082	2	BELT, Narrow v-belt SPB 3750
20	061033363	1	RAKE, Rake
41	061001790	1	RAIL, Guide rail
42	003783688	6	SCREW, Verbus bolt W158.12-M10x16 100
46	614-6016	6	BOLT, Hex, M6 x 16, 8.8,
47	832-10406	6	NUT, M6 x 1, Cl 8, Hex nut M6 DIN982 8
49	614-6016	6	BOLT, Hex, M6 x 16, 8.8,
50	832-10406	6	NUT, M6 x 1, Cl 8, Hex nut M6 DIN982 8
52	061033355	2	DEFLECTOR, Plate

J031 COVER

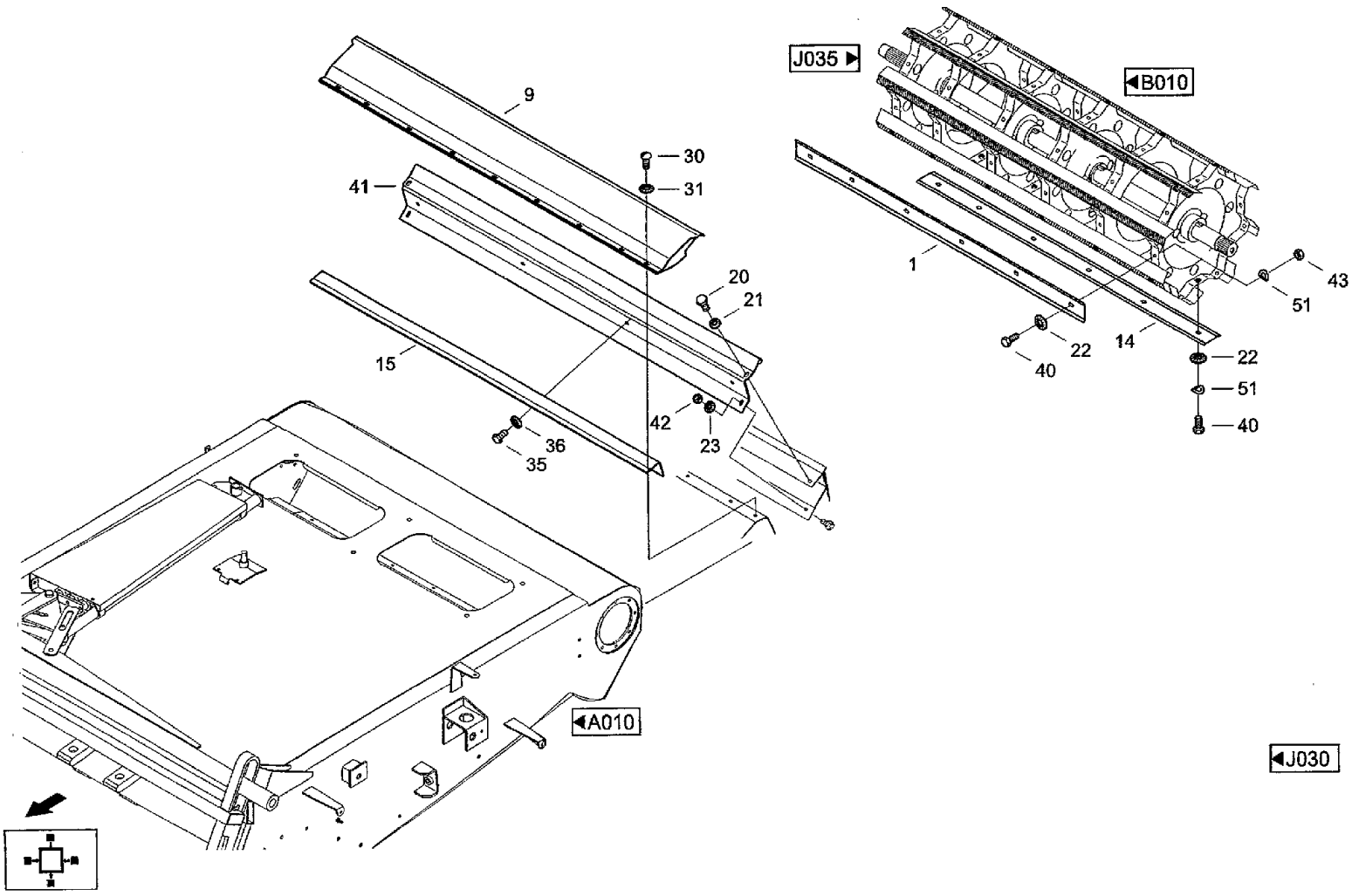
J035 ▶
◀B010
9
30
31
41
20
21
15
42
23
36
35
1
43
51
22
14
40
22
51
40
◀A010
◀J030

CF80 CASE IH CROSS FLOW COMBINE

J031 COVER

Ref	Part Number	Qty	Description
1	060127400	14	PANEL, Panel
9	31294611	2	PROFILE, Profile
14	060127417	2	PANEL, Panel
15	31294515	2	ANGLE, Sealing angle
20	614-10025	4	BOLT, Hex, M10 x 25, 8.8, Full Thd, Hex bolt M10X25ISO40178.8
21	06577052	4	WASHER, SPECIAL, Locking washer B10
22	06577060	96	WASHER, Locking washer B12
23	06577044	4	WASHER, SPECIAL, Locking washer B8
30	06085083	18	SCREW, Fillister head screw M8x20 ISO7380 8.8
31	06577044	18	WASHER, SPECIAL, Locking washer B8
35	614-10025	8	BOLT, Hex, M10 x 25, 8.8, Full Thd, Hex bolt M10x25IS040178.8
36	06577052	8	WASHER, SPECIAL, Locking washer B10
40	614-12030	96	BOLT, Hex, M12 x 30, 8.8, Hex bolt M12X30ISO40178.8
41	31294556	2	COVER, PROTECTIVE, Cover
42	825-1408	4	NUT, M8, Cl 8,
43	825-1412	84	NUT, M12, Cl 8, Hex nut M12 IS04032 8
51	97022151	96	WASHER, SPRING, Wave washer spring B12 DIN137 FST

J032 FEEDER HOUSING WEDGE

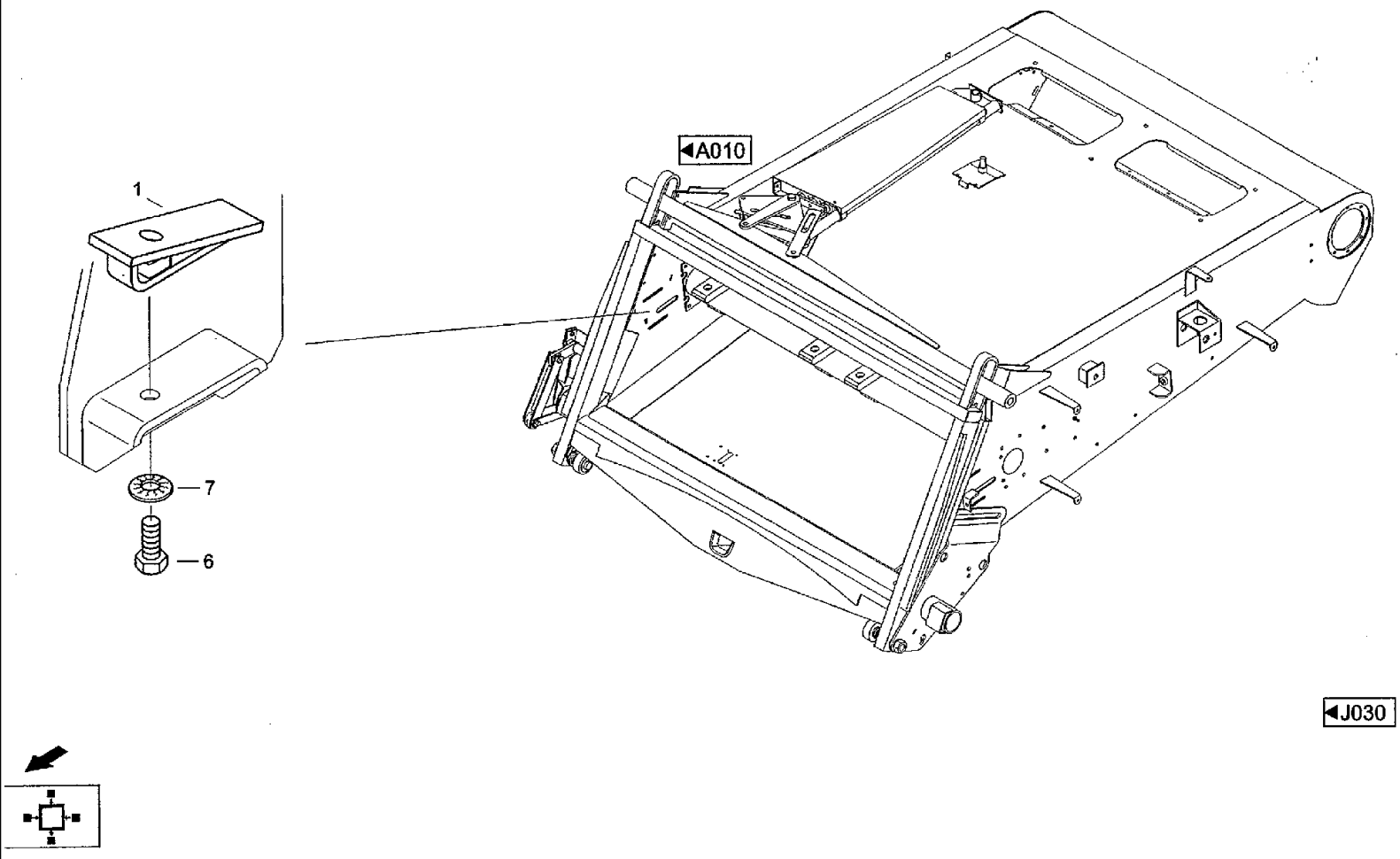

CF80 CASE IH CROSS FLOW COMBINE

J032 FEEDER HOUSING WEDGE

Ref	Part Number	Qty	Description
1	31294990	2	ANGLE BAR, Key
6	614-10025	2	BOLT, Hex, M10 x 25, 8.8, Full Thd, Hex bolt M10x25ISO40178.8
7	06577052	2	WASHER, SPECIAL, Locking washer B10

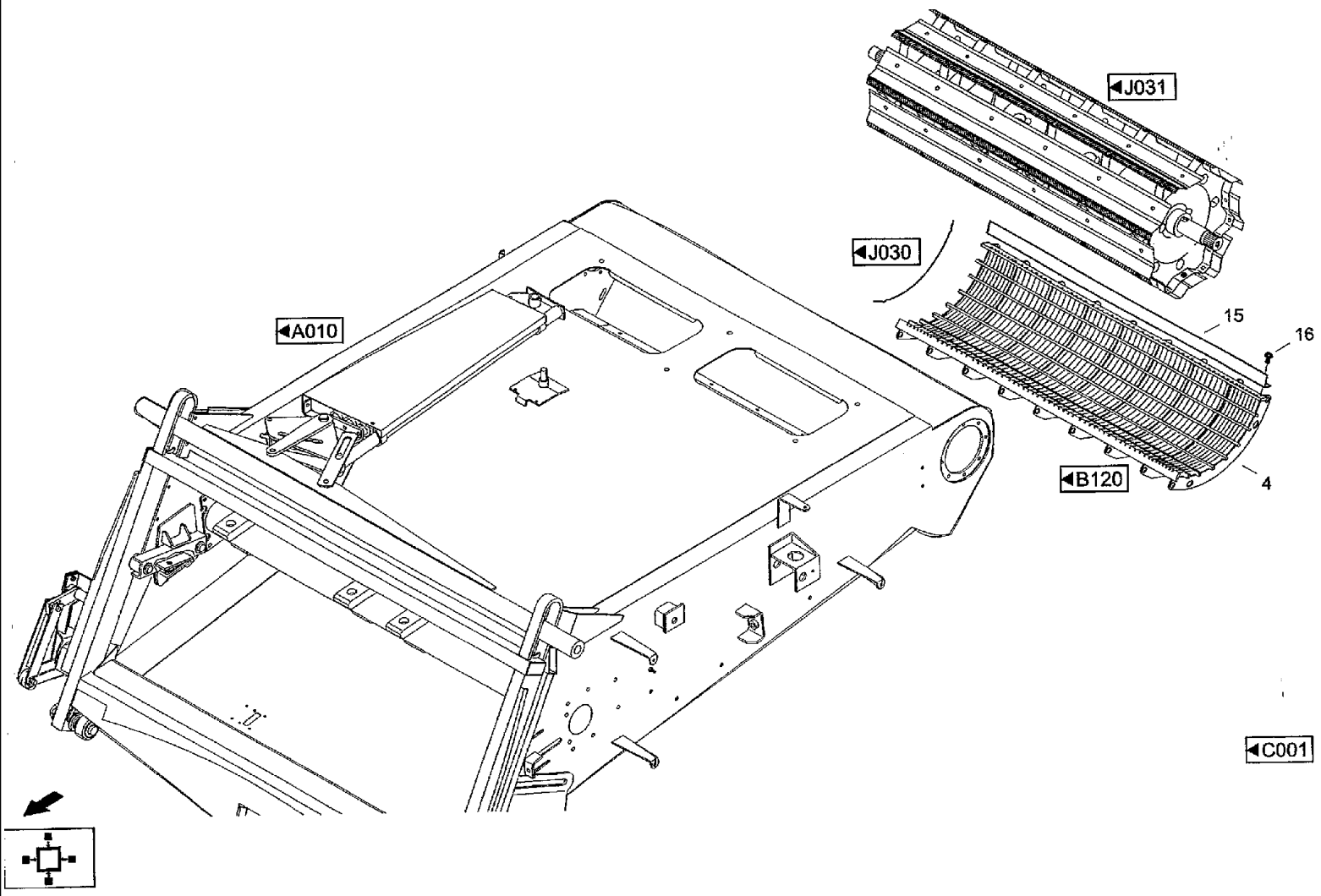
J031
J030
A010
15
16
B120
4
C001

CF80 CASE IH CROSS FLOW COMBINE

J035 EQUIPMENT, SUNFLOWER

Ref	Part Number	Qty	Description
4	060127298	1	CONCAVE, Concave MAIS
15	061001790	1	RAIL, Guide rail
16	003783688	6	SCREW, Verbus bolt W158.12-M10x16 100

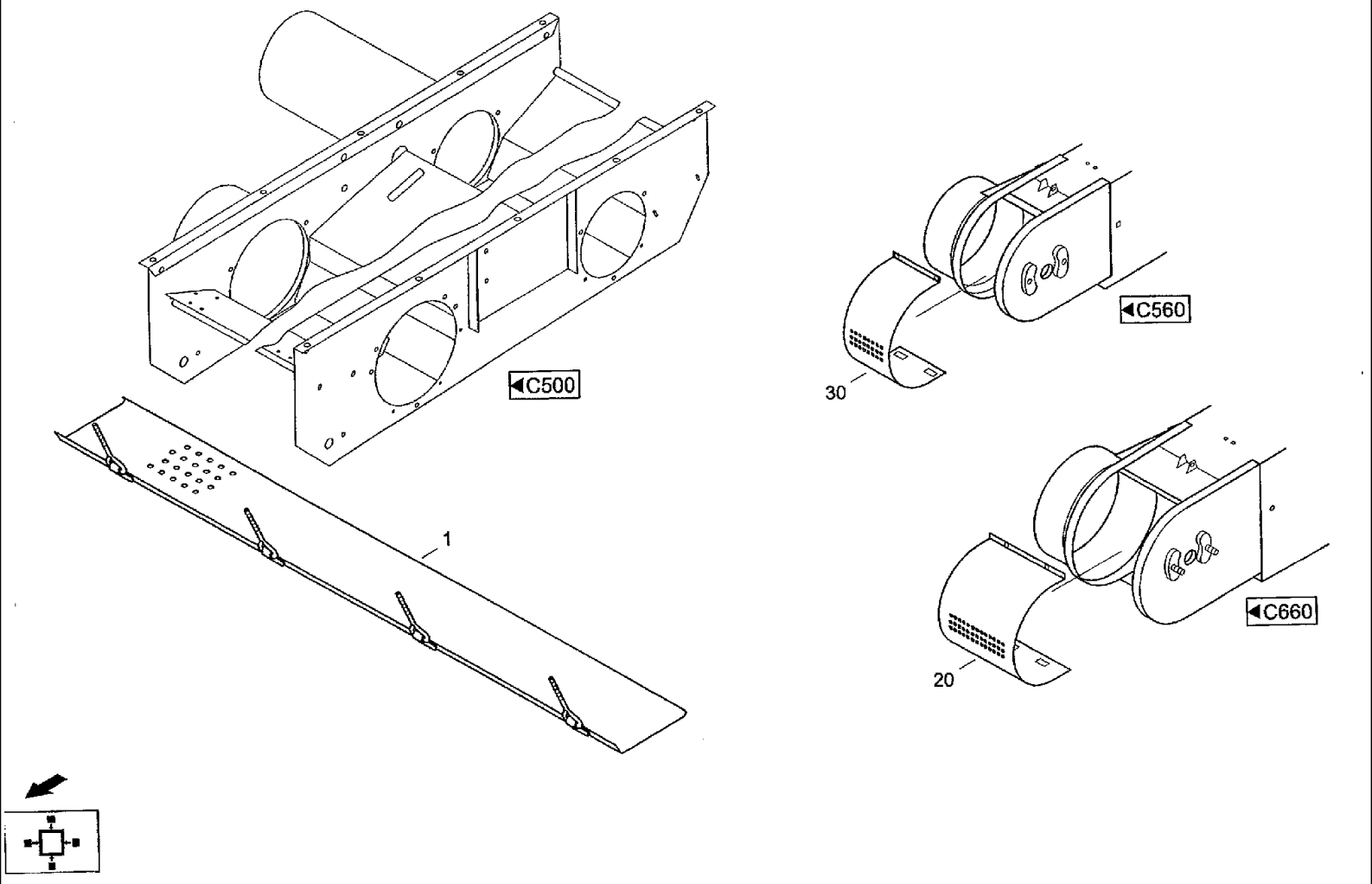
C500
C560
30
1
C660
20

CF80 CASE IH CROSS FLOW COMBINE

J040 DOOR, DRIED PULSES

Ref	Part Number	Qty	Description
1	061038191	1	FLAP, Door
20	061038214	1	FLAP, Door KORNERELEVATOR
30	060201235	1	FLAP, Door AHRENELEVATOR

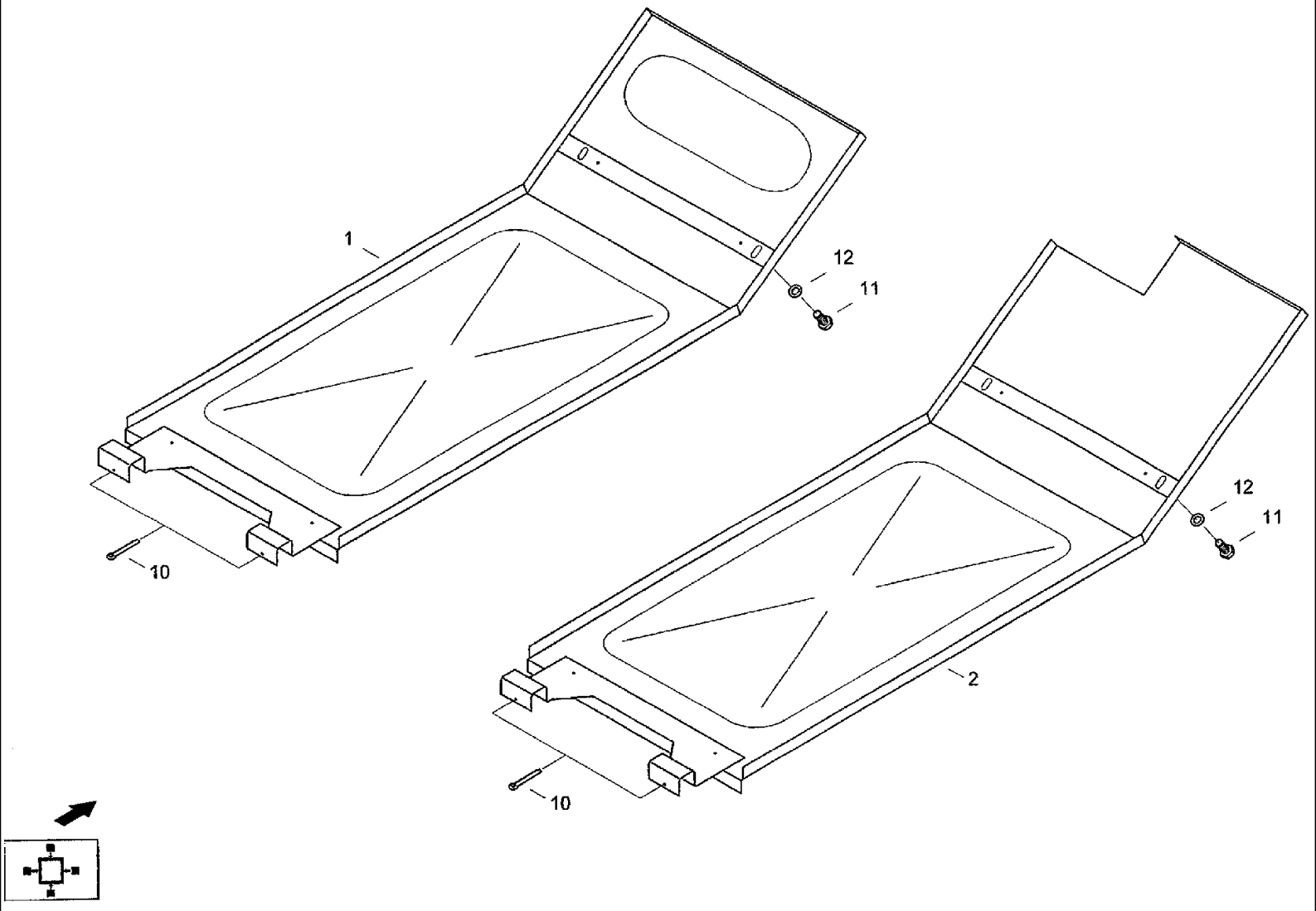
1
12
11
10
12
11
2
10

CF80 CASE IH CROSS FLOW COMBINE

J060 FLOOR PROTECTION

Ref	Part Number	Qty	Description
1	31292810	1	PROTECTION PLATE, Guard l
2	31292827	1	PROTECTION PLATE, Guard r
10	06400431	4	PIN, SPLIT (COTTER), Splint pin 4x56 DIN94 ST
11	614-10025	4	BOLT, Hex, M10 x 25, 8.8, Full Thd, Hex bolt M1 0x25180401 7 8.8
12	06577052	4	WASHER, SPECIAL, Locking washer B10

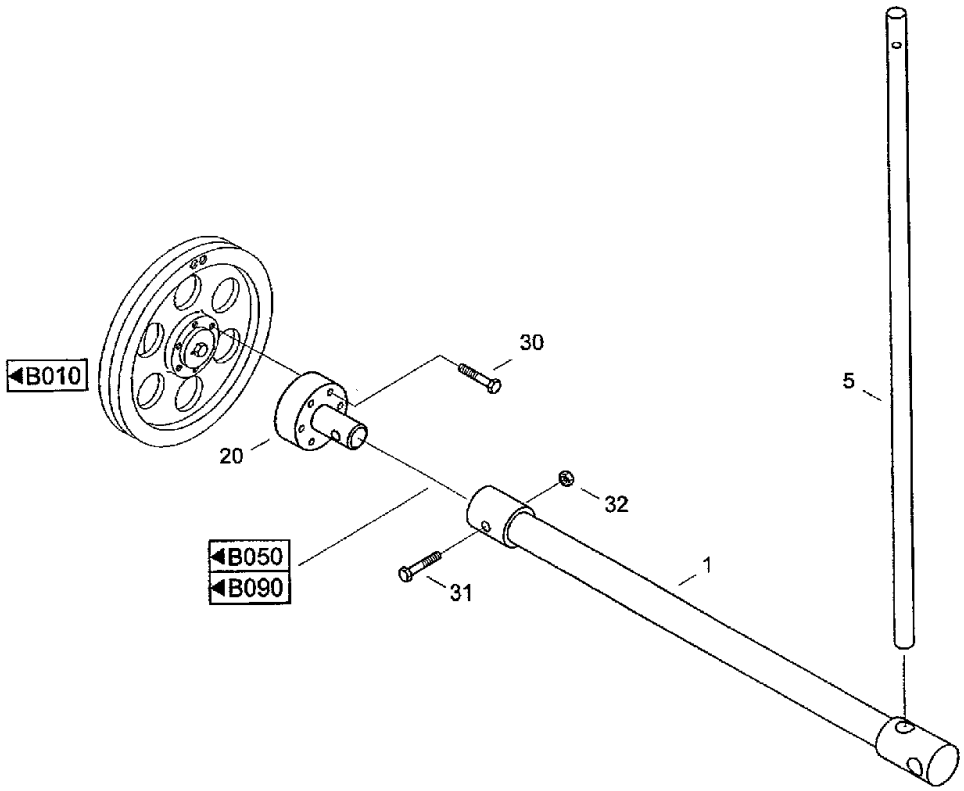
B010
30
5
20
32
B050
B090
1
31

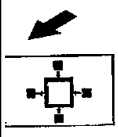

CF80 CASE IH CROSS FLOW COMBINE

J070 THRESHING DRUM REVERSING BAR

Ref	Part Number	Qty	Description
1	061033878	1	ROD, Rod
5	31348691	1	BAR ASSY., Bar
20	31288211	1	FITTING, Adapter
30	814-10060	6	BOLT, Hex, M10 x 60, 8.8,
31	814-16090	1	BOLT, Hex, M16 x 90, 8.8,
32	825-1416	1	NUT, M16, Cl 8,

J083 FLAP SIEVE, CASCADE SECTION [1-5/8]

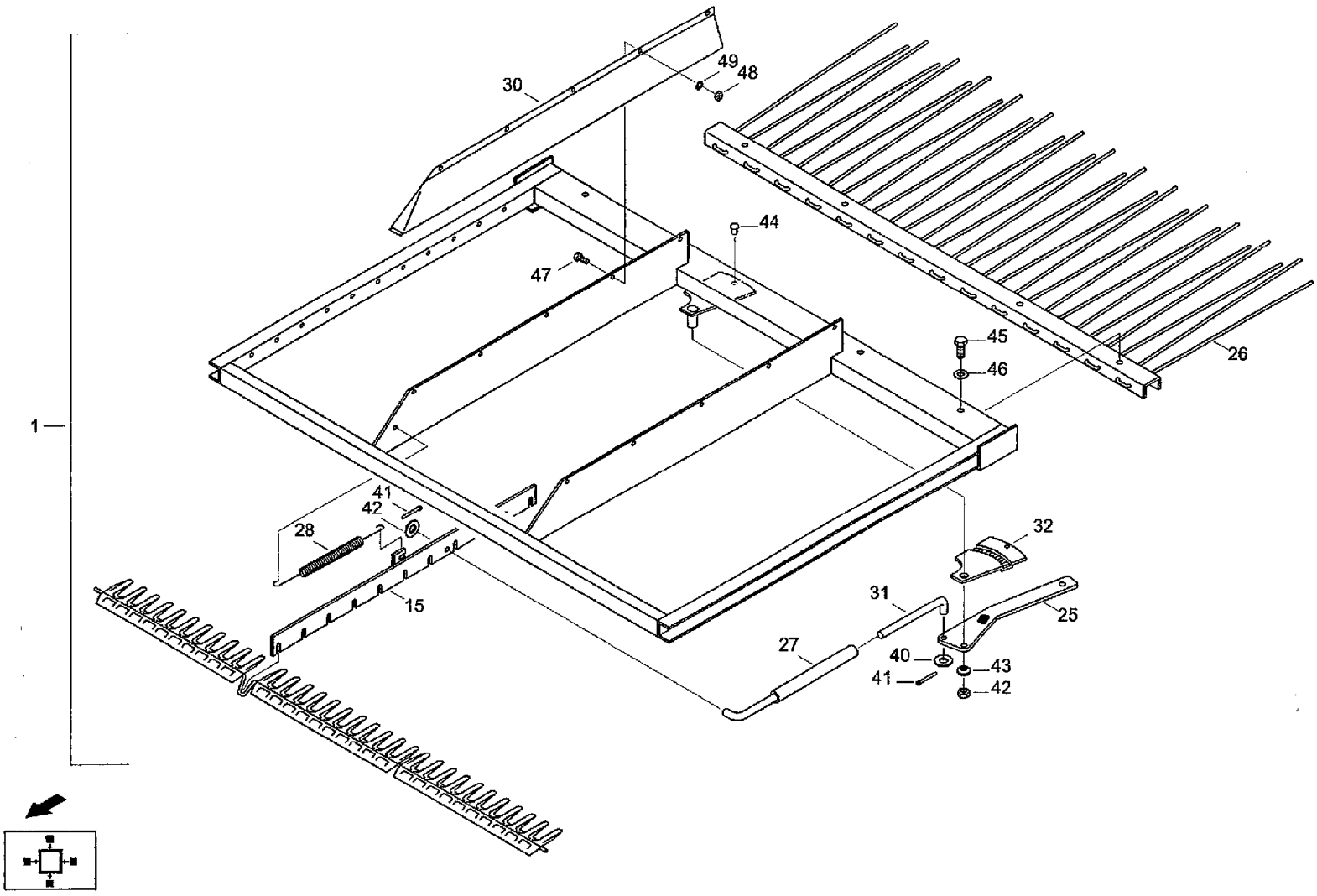

CF80 CASE IH CROSS FLOW COMBINE

J083 FLAP SIEVE, CASCADE SECTION [1-5/8]

Ref	Part Number	Qty	Description
1	31291176	2	SIEVE, Cascade section 1-5/8
15	31291110	1	SPOOL, Slide valve
25	021015561	1	LEVER, Regulating lever LINKS
26	061033484	1	RAKE, Rake
27	021012382	1	LEVER, CONTROL, Control rod
28	021008521	1	SPRING, TENSION, Tension spring
30	021007545	1	COVER, PROTECTIVE, Cover
31	021008298	1	BAR, Bar
32	021015586	1	SEGMENT, Segment LINKS
40	895-11008	2	WASHER, M8 x 16 x 1.6, Washer 8.4DIN125ST
41	733-2512	2	PIN, SPLIT (COTTER), M2.5 x 12, Splint pin 2,5x12 DIN94 ST
42	832-46408	1	NUT, LOCK, M8 x 1.25, Cl 8,
43	003783751	2	SPRING, BELLEVILLE, Belleville spring A16-A3C DIN2093
44	003794553	1	RIVET, Rivet 5x10DIN660ST
45	614-6014	4	BOLT, Hex, M6 x 14, 8.8, Full Thd, Hex bolt M6x14ISO40178.8
46	06501397	4	WASHER, SPRING, Wave washer spring B6 DIN137 FST
47	614-4010	5	BOLT, Hex, M4 x 10, 8.8, Full Thd, Hex bolt M4x10ISO40178.8
48	825-1404	5	NUT, M4, Cl 8,
49	893-11004	5	WASHER, LOCK, Ext Tooth, M4, Toothed washer A4.3 DIN6797 FST

J086 FLAP SIEVE [1-5/8 - CF80K]

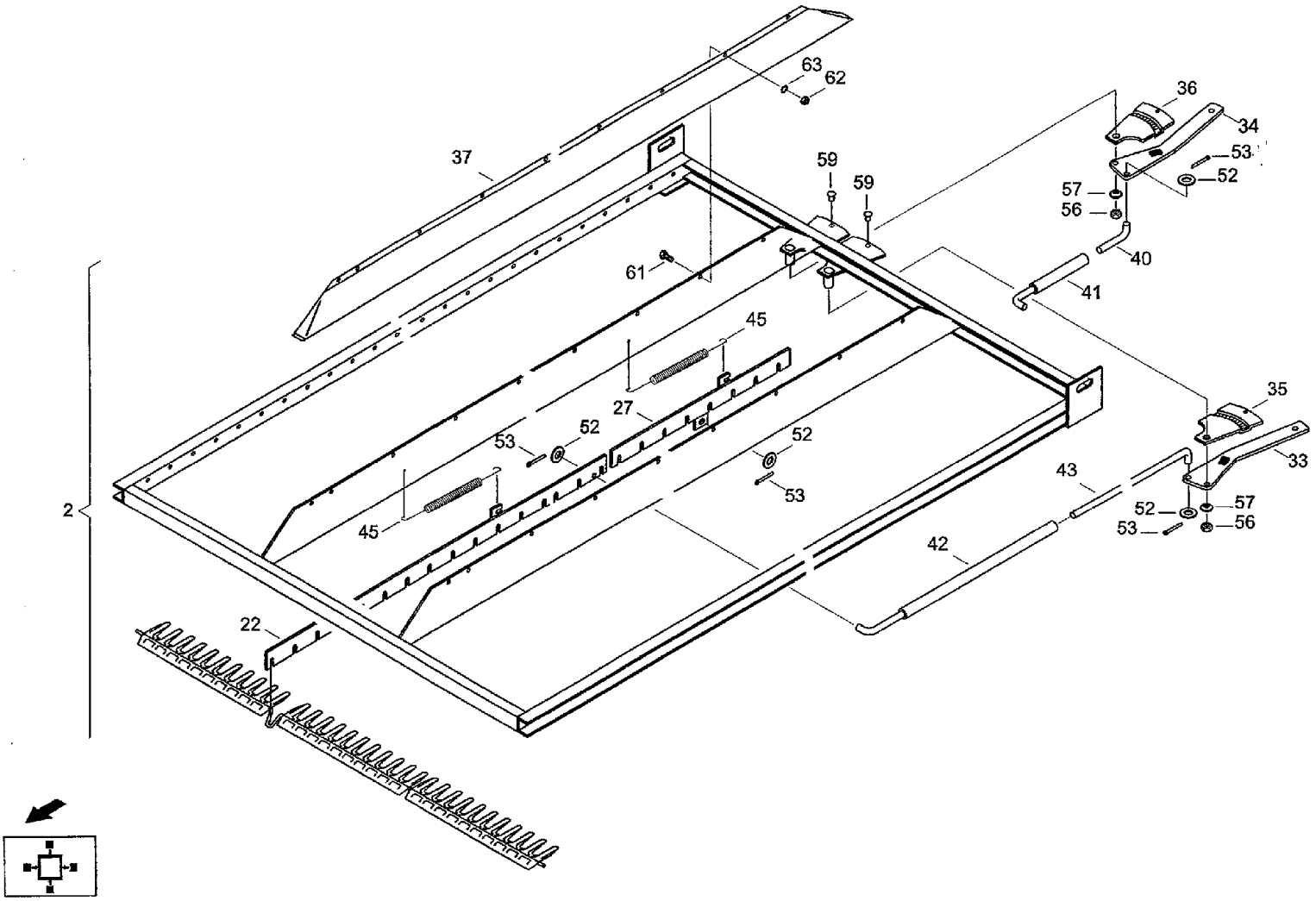

CF80 CASE IH CROSS FLOW COMBINE

J086 FLAP SIEVE [1-5/8 - CF80K]

Ref	Part Number	Qty	Description
2	31352903	2	SIEVE, Flap sieve 1-5/8 IEES
22	31291280	1	SPOOL, Slide valve
27	31291303	1	SPOOL, Slide valve
29	31338608	1	LEVER, Lever Os
34	021015578	1	LEVER, Regulating lever r
36	021015594	1	SEGMENT, Segment r
37	061070222	1	COVER, PROTECTIVE, Cover
40	021008298	1	BAR, Bar
41	021012382	1	LEVER, CONTROL, Control rod
42	021008304	1	LEVER, CONTROL, Control rod
43	021008320	1	BAR ASSY., Bar
45	021008521	2	SPRING, TENSION, Tension spring
52	895-11008	4	WASHER, M8 x 16 x 1.6, Washer 8.4DIN125ST
53	733-2512	4	PIN, SPLIT (COTTER), M2.5 x 12, Splint pin 2,5x12DIN94ST
56	832-46408	2	NUT, LOCK, M8 x 1.25, Cl 8,
57	003783751	4	SPRING, BELLEVILLE, Belleville spring A16-A3C DIN2093
59	003794553	1	RIVET, Rivet 5X10DIN660ST
61	614-4010	13	BOLT, Hex, M4 x 10, 8.8, Full Thd, Hex bolt M4x10ISO40178.8
62	825-1404	13	NUT, M4, Cl 8,
63	893-11004	13	WASHER, LOCK, Ext Tooth, M4, Toothed washer A4,3 DIN6797 FST

J086 FLAP SIEVE [1-5/8]

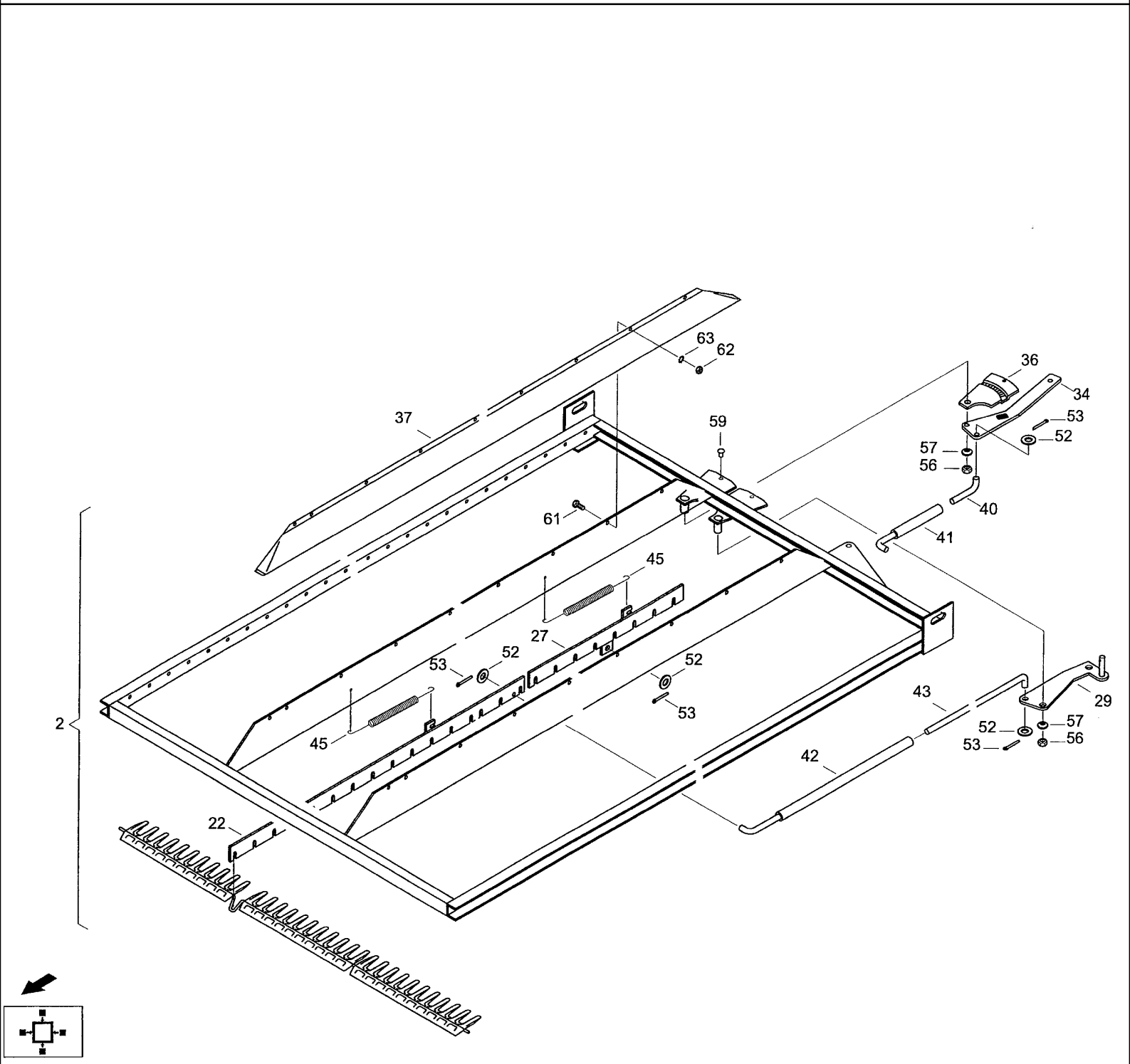

CF80 CASE IH CROSS FLOW COMBINE

J086 FLAP SIEVE [1-5/8]

Ref	Part Number	Qty	Description
2	31291223	2	SIEVE, GRAIN, Flap sieve 1-5/8
22	31291280	1	SPOOL, Slide valve
27	31291303	1	SPOOL, Slide valve
33	021015561	1	LEVER, Regulating lever LINKS
34	021015578	1	LEVER, Regulating lever r
35	021015586	1	SEGMENT, Segment LINKS
36	021015594	1	SEGMENT, Segment r
37	061070222	1	COVER, PROTECTIVE, Cover
40	021008298	1	BAR, Bar
41	021012382	1	LEVER, CONTROL, Control rod
42	021008304	1	LEVER, CONTROL, Control rod
43	021008320	1	BAR ASSY., Bar
45	021008521	2	SPRING, TENSION, Tension spring
52	895-11008	4	WASHER, M8 x 16 x 1.6, Washer 8.4DIN125ST
53	733-2512	4	PIN, SPLIT (COTTER), M2.5 x 12, Splint pin 2,5x12 DIN94 ST
56	832-46408	2	NUT, LOCK, M8 x 1.25, Cl 8,
57	003783751	4	SPRING, BELLEVILLE, Belleville spring A16-A3C DIN2093
59	003794553	2	RIVET, Rivet 5x10DIN660ST
61	614-4010	13	BOLT, Hex, M4 x 10, 8.8, Full Thd, Hex bolt M4x10ISO40178.8
62	825-1404	13	NUT, M4, Cl 8,
63	893-11004	13	WASHER, LOCK, Ext Tooth, M4, Toothed washer A4,3 DIN6797 FST

J090 VIBRATOR LINING

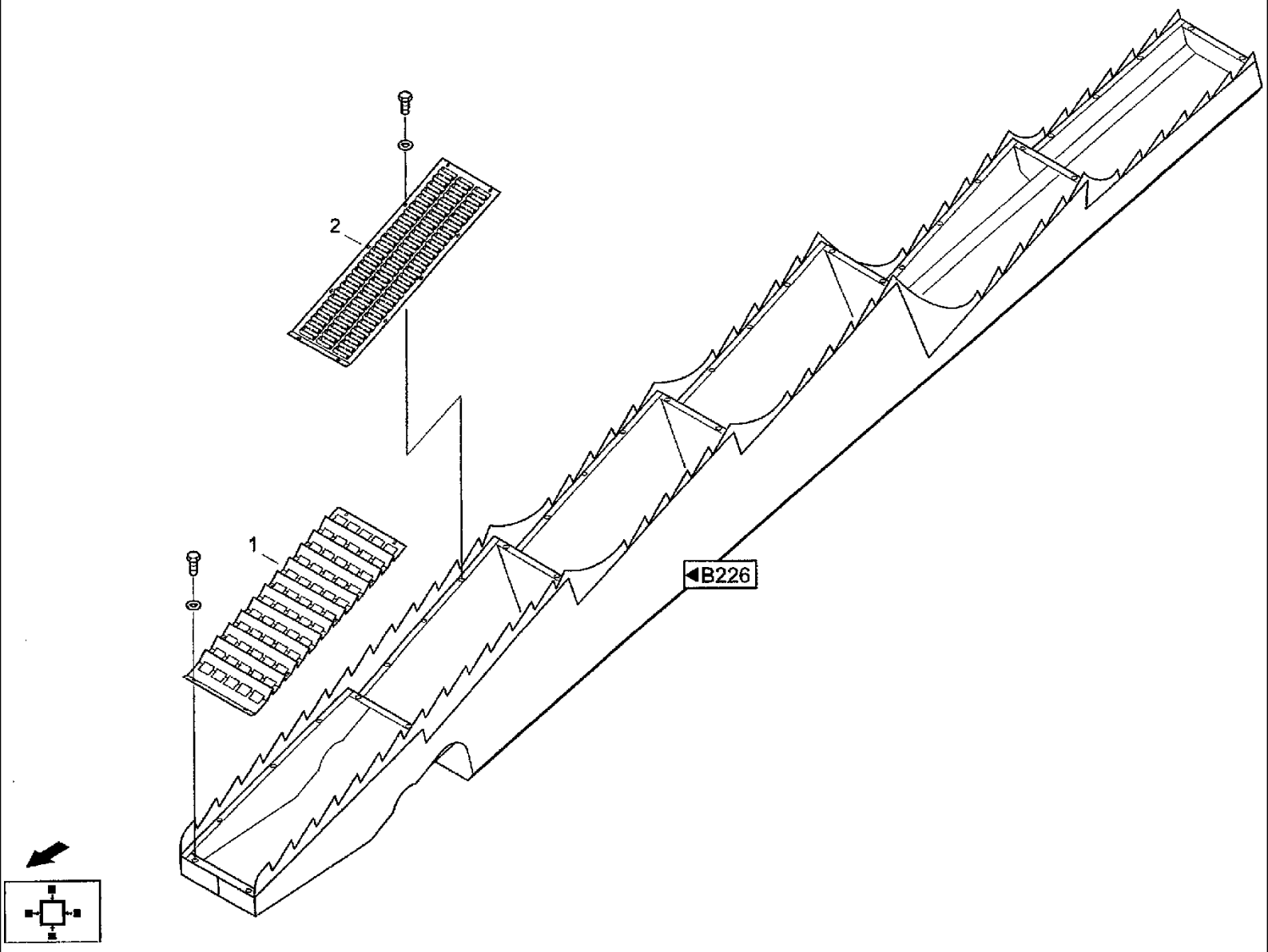

CF80 CASE IH CROSS FLOW COMBINE

J090 VIBRATOR LINING

Ref	Part Number	Qty	Description
1	31307224	6	LINING, Vibrator lining B
2	31307851	6	LINING, Vibrator lining A

CF80 CASE IH CROSS FLOW COMBINE

J100 BRIDGE

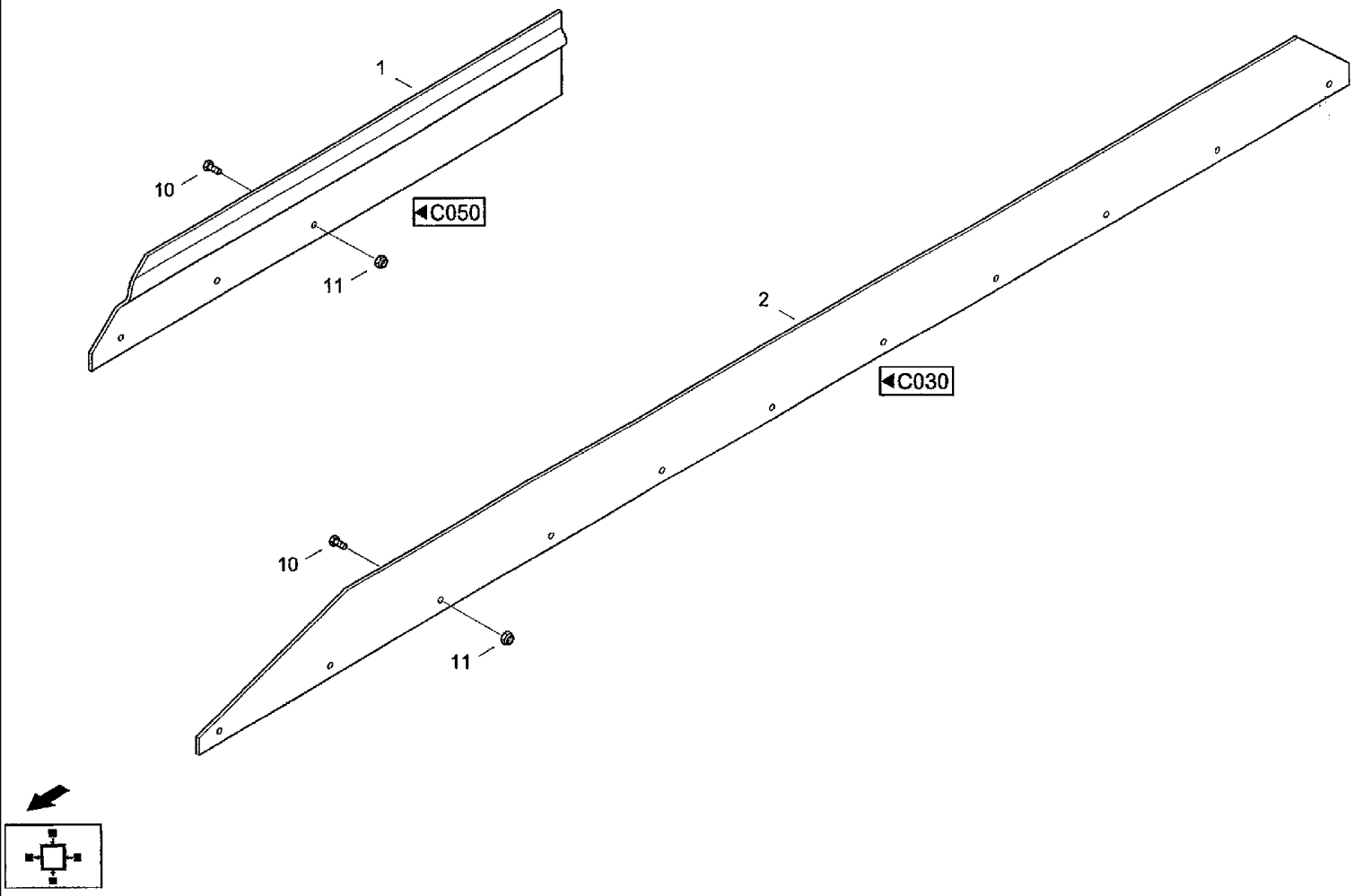

CF80 CASE IH CROSS FLOW COMBINE

J100 BRIDGE

Ref	Part Number	Qty	Description
1	021010516	4	CATWALK, Divider
2	061011872	4	CATWALK, Divider
10	614-4010	28	BOLT, Hex, M4 x 10, 8.8, Full Thd, Hex bolt M4x10ISO40178.8
11	832-46404	28	NUT, LOCK, M4 x .7, Cl 8, Hex nut VM4DIN9808

J120 RUB BOTTOM, CLOVER

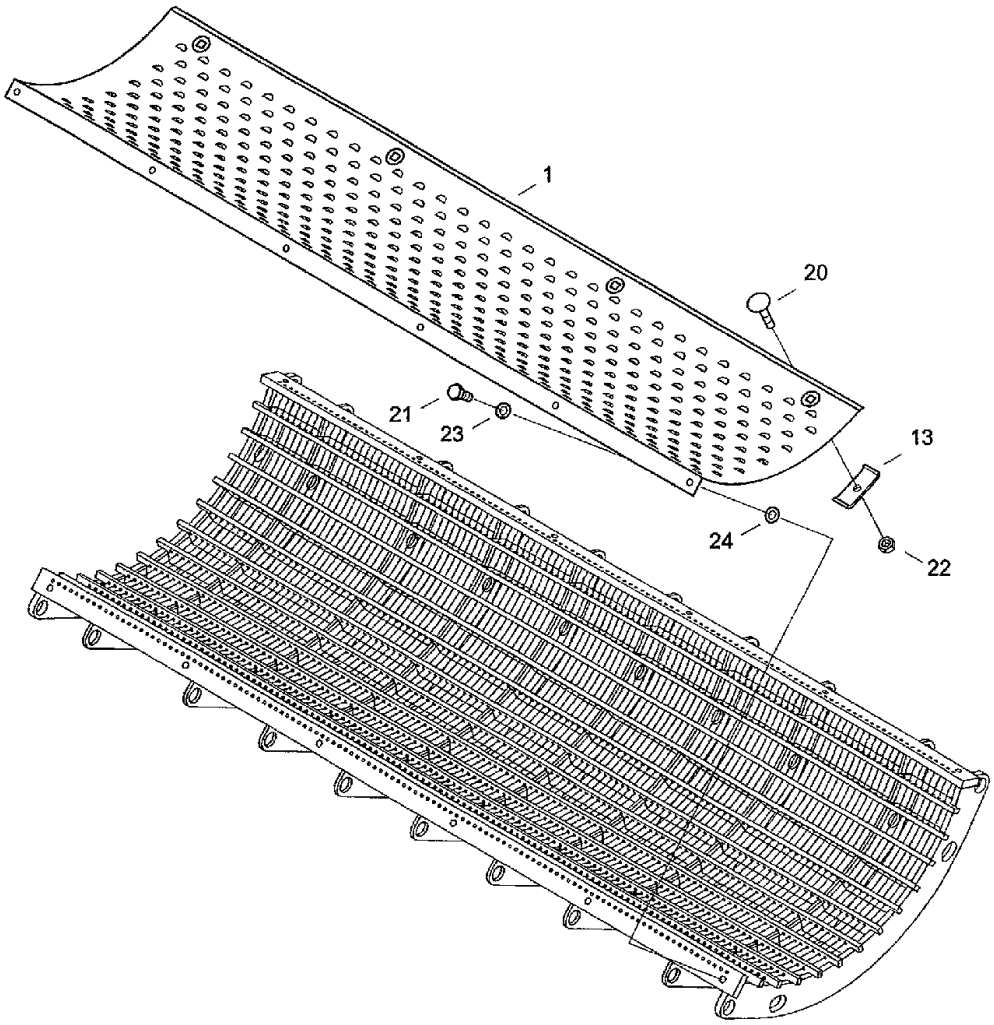

B140

CF80 CASE IH CROSS FLOW COMBINE

J120 RUB BOTTOM, CLOVER

Ref	Part Number	Qty	Description
1	060102425	1	SHEET, Clover rasper
13	020237903	4	SHIN, Strap
20	97001773	4	BOLT, CARRIAGE, Flat-round-head screw M1 0x60 DIN603 8.8
21	614-10016	6	BOLT, Hex, M10 x 16, 8.8, Full Thd, Hex bolt M10x16ISO40178.8
22	006269000	4	NUT, Hex nut M10DIN6924SW16-8
23	06577003	6	WASHER, SPECIAL, Locking washer M10
24	020947713	6	WASHER, Washer

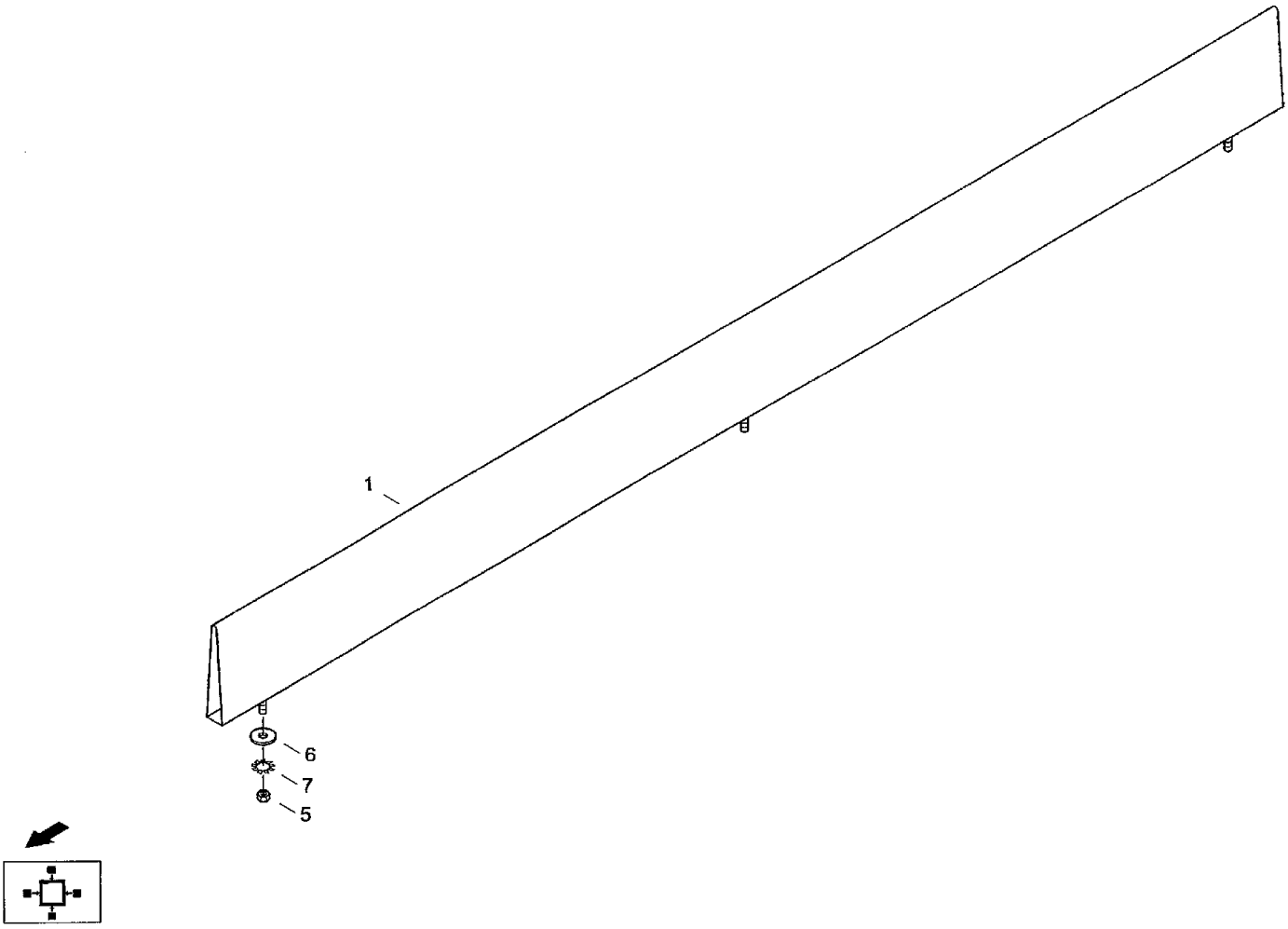
1
6
7
5

CF80 CASE IH CROSS FLOW COMBINE

J140 PERFORATED SIEVE, BRIDGE

Ref	Part Number	Qty	Description
1	021010540	4	CATWALK, Divider
5	825-1406	12	NUT, M6, Cl 8,
6	06502888	12	WASHER, Washer R6.6DIN440100HV
7	893-11006	12	WASHER, Ext Tooth, M6, Toothed washer A6,4 DIN6797 FST

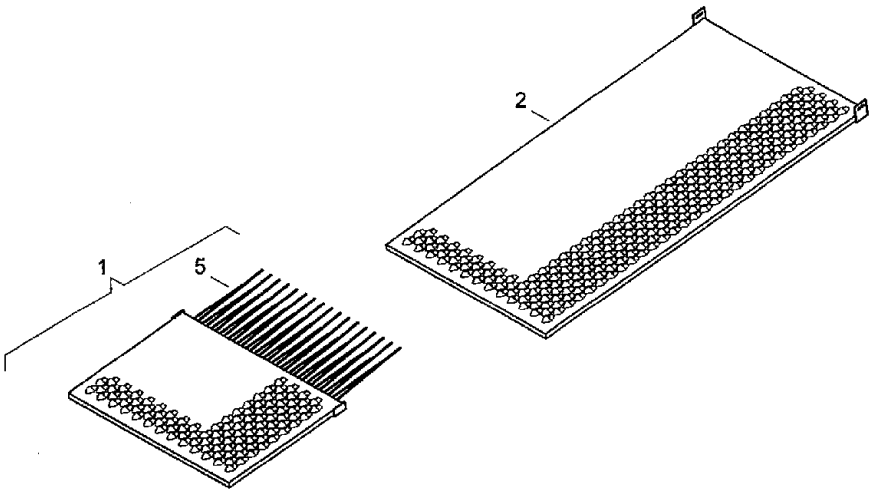

C013

CF80 CASE IH CROSS FLOW COMBINE

J160 DOUBLE NOSE SIEVE, MAIZE

Ref	Part Number	Qty	Description
1	31292257	2	SIEVE, GRAIN, Cascade sieve
2	31292265	2	SIEVE, GRAIN, Top sieve
5	061033515	17	PRONG, Tine

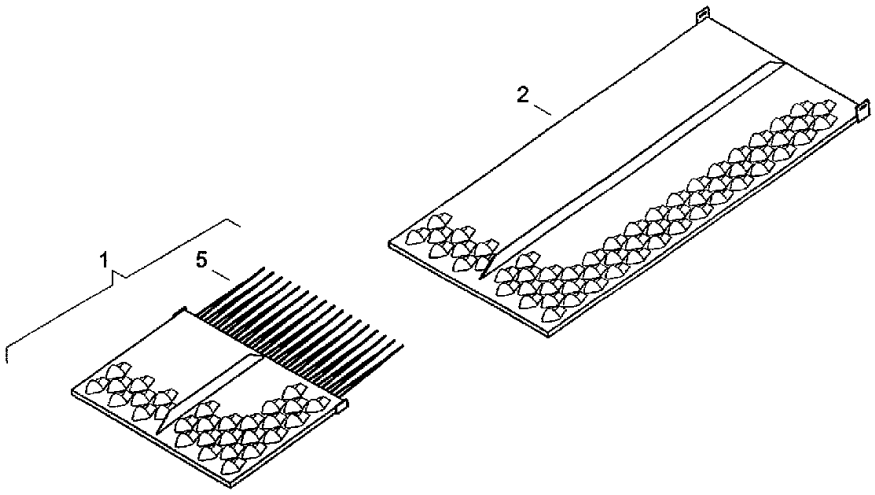

C013

CF80 CASE IH CROSS FLOW COMBINE

J161 DOUBLE NOSE SIEVE, MAIZE [CCM]

Ref	Part Number	Qty	Description
1	31329182	2	SCREEN, Cascade sieve
2	31329190	2	SIEVE, Top sieve
5	061033515	17	PRONG, Tine

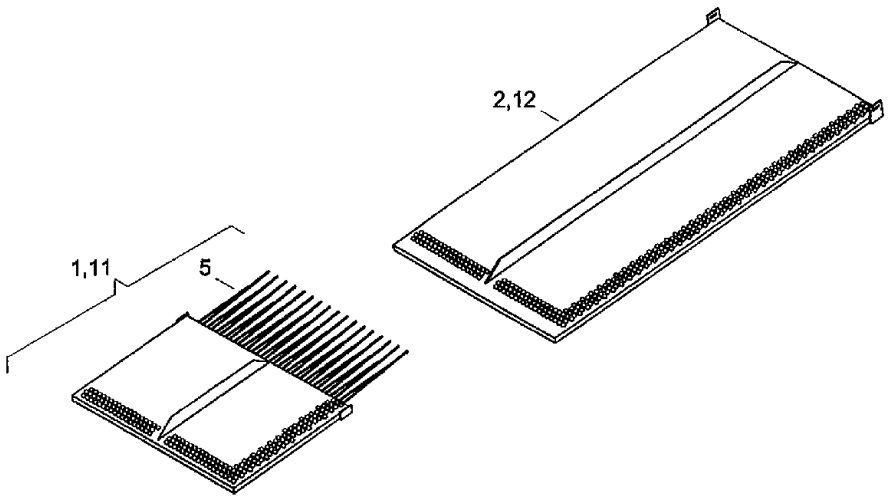

C013

CF80 CASE IH CROSS FLOW COMBINE

J165 TOP SIEVE, MAIZE

Ref	Part Number	Qty	Description
1	31328647	2	SIEVE, Cascade sieve D16
2	31328655	2	SIEVE, Top sieve D16
5	061033515	34	PRONG, Tine
11	31329012	2	SIEVE, Cascade sieve D20
12	31329020	2	SIEVE, Top sieve D20

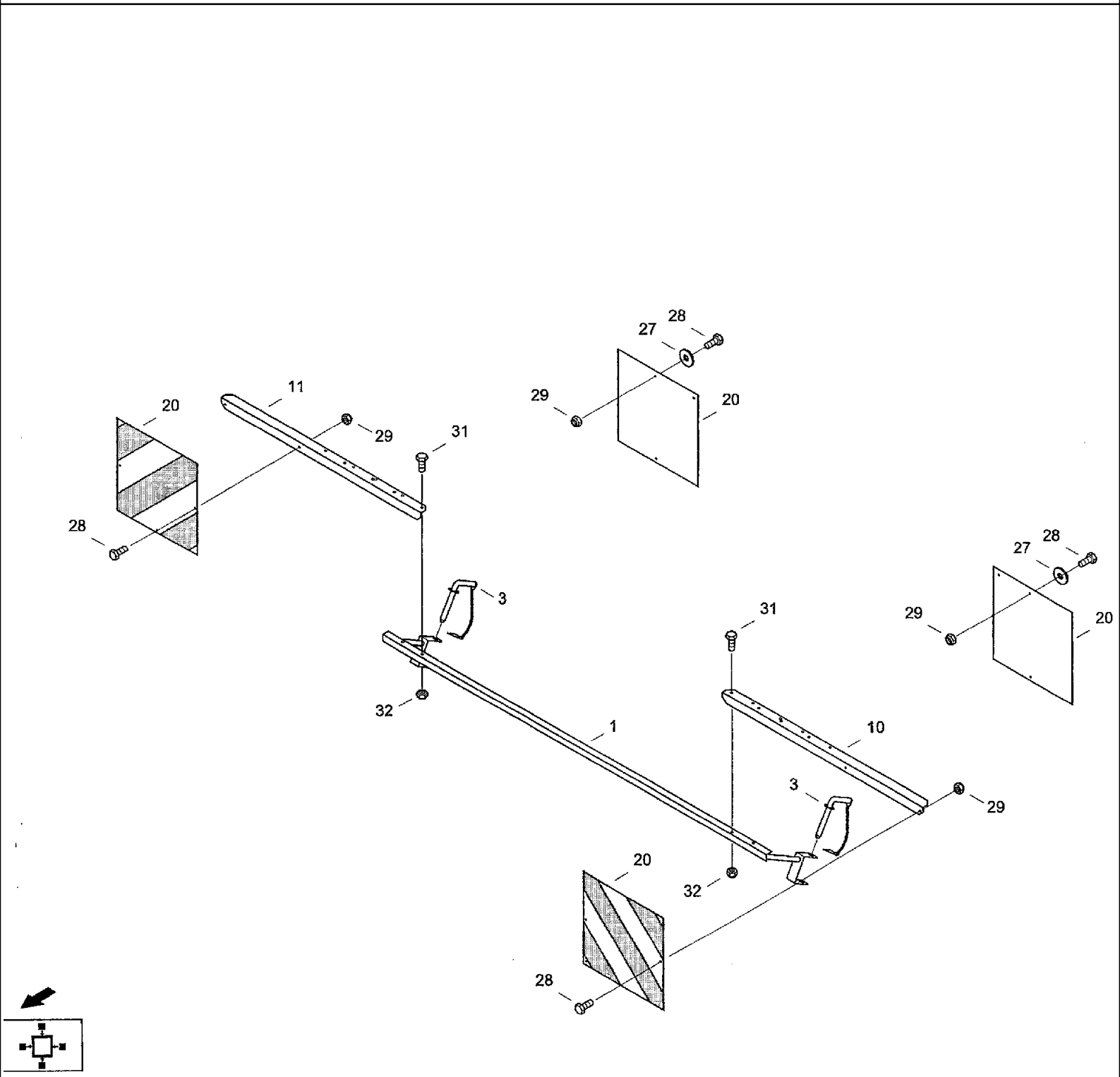
28
27
29
20
11
20
29
31
28
3
31
27
28
29
20
32
1
10
3
29
20
32
28

CF80 CASE IH CROSS FLOW COMBINE

J170 OVERWIDTH MARKING [CF80P]

Ref	Part Number	Qty	Description
1	31292972	1	SUPPORT, Support
3	03717123	2	PIN, LARGE, Detent 16x115-ST/FEUERVERZ.
10	31293450	1	SUPPORT, Support
11	31293467	1	SUPPORT, Support
20	060526254	4	TAG, Warning console
27	895-25006	6	WASHER, M6 x 18 x 1.6, Washer 6,4 DIN9021
28	614-6016	10	BOLT, Hex, M6 x 16, 8.8,
29	832-10406	10	NUT, M6 x 1, Cl 8, Hex nut M6 DIN982 8
31	614-8020	4	BOLT, Hex, M8 x 20, 8.8, Hex bolt M8X20ISO40178.8
32	832-10408	4	NUT, M8 x 1.25, Cl 8, Hex nut M8 DIN982 8

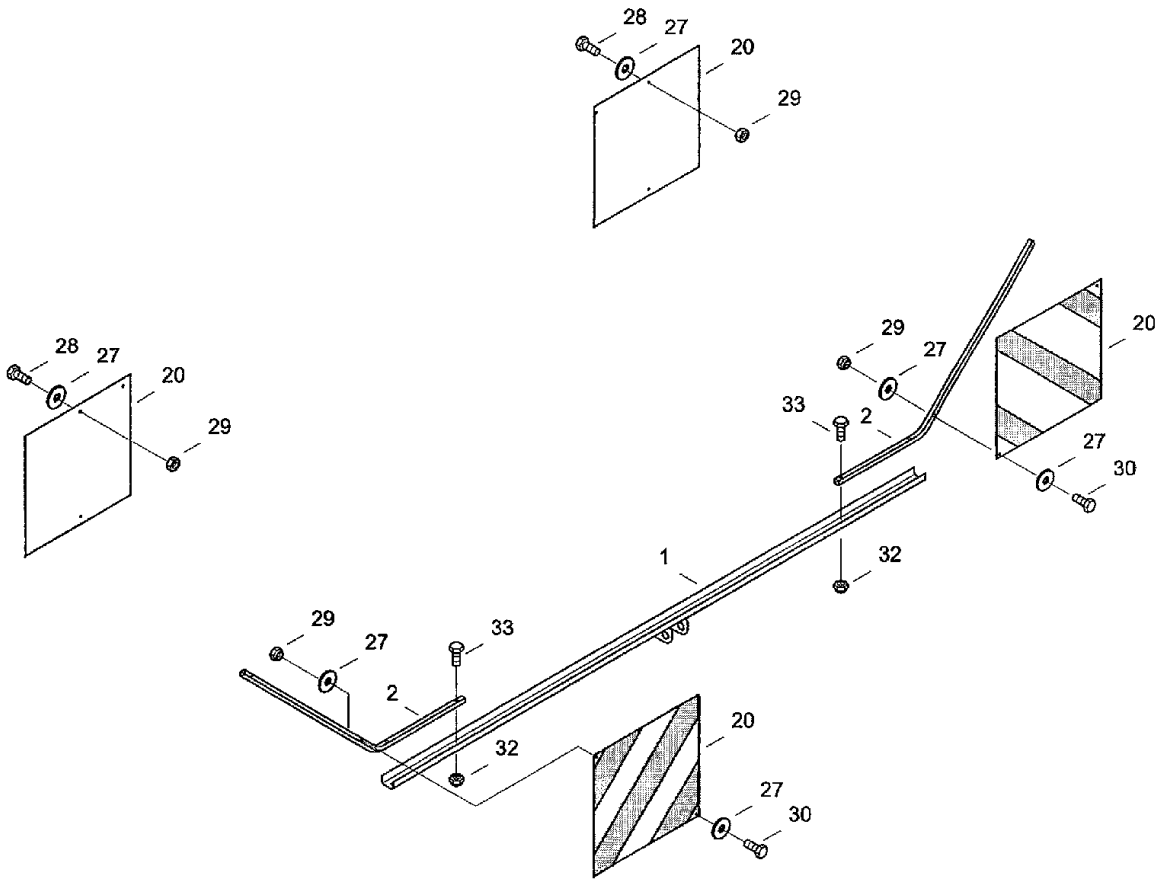
28
27
20
29
28
27
20
29
29
27
20
33
2
27
30
1
32
29
27
33
2
32
20
27
30

CF80 CASE IH CROSS FLOW COMBINE

J170 OVERWIDTH MARKING [CF80Q]

Ref	Part Number	Qty	Description
1	31323103	1	SUPPORT, Support
2	31323136	2	PROFILE, Profile
20	060526254	4	TAG, Warning console
27	895-25006	14	WASHER, M6 x 18 x 1.6, Washer 6,4DIN9021
28	614-6016	6	BOLT, Hex, M6 x 16, 8.8,
29	832-10406	10	NUT, M6 x 1, Cl 8, Hex nut M6 DIN982 8
30	614-6030	4	BOLT, Hex, M6 x 30, 8.8, Full Thd, Hex bolt M6X30ISO40178.8
32	832-10408	4	NUT, M8 x 1.25, Cl 8, Hex nut M8 DIN982 8
33	614-8030	4	BOLT, Hex, M8 x 30, 8.8, Hex bolt M8x30ISO40178.8

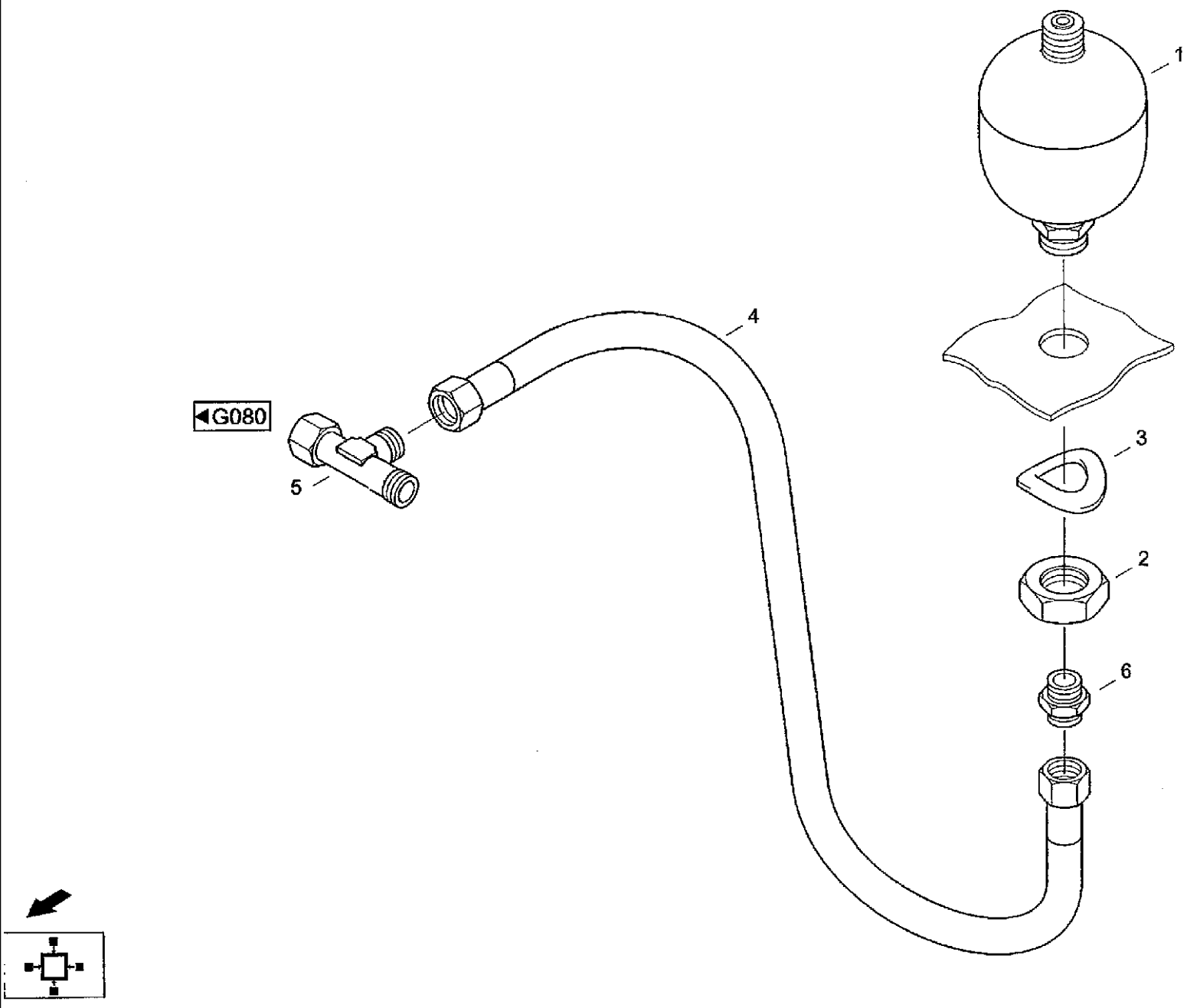
1
2
3
4
5
6
◄G080

CF80 CASE IH CROSS FLOW COMBINE

J190 VIBRATION DAMPER

Ref	Part Number	Qty	Description
1	03130621	1	ACCUMULATOR, Accumulator SB0330-0.6
2	060522314	1	NUT, Hex nut M33x1,5DIN93617H
3	060523516	1	WASHER, SPRING, Wave washer spring B33-FST-A3C DIN 137
4	04122006	1	NO DESCRIPTION, Hose line 2SN10DKOLDKOL-600
5	03432554	1	FITTING, Right-angle screwing EL12-L/OMD
6	03432747	1	ADAPTER, Male connector GE12-L/R1/2-ED/OMD

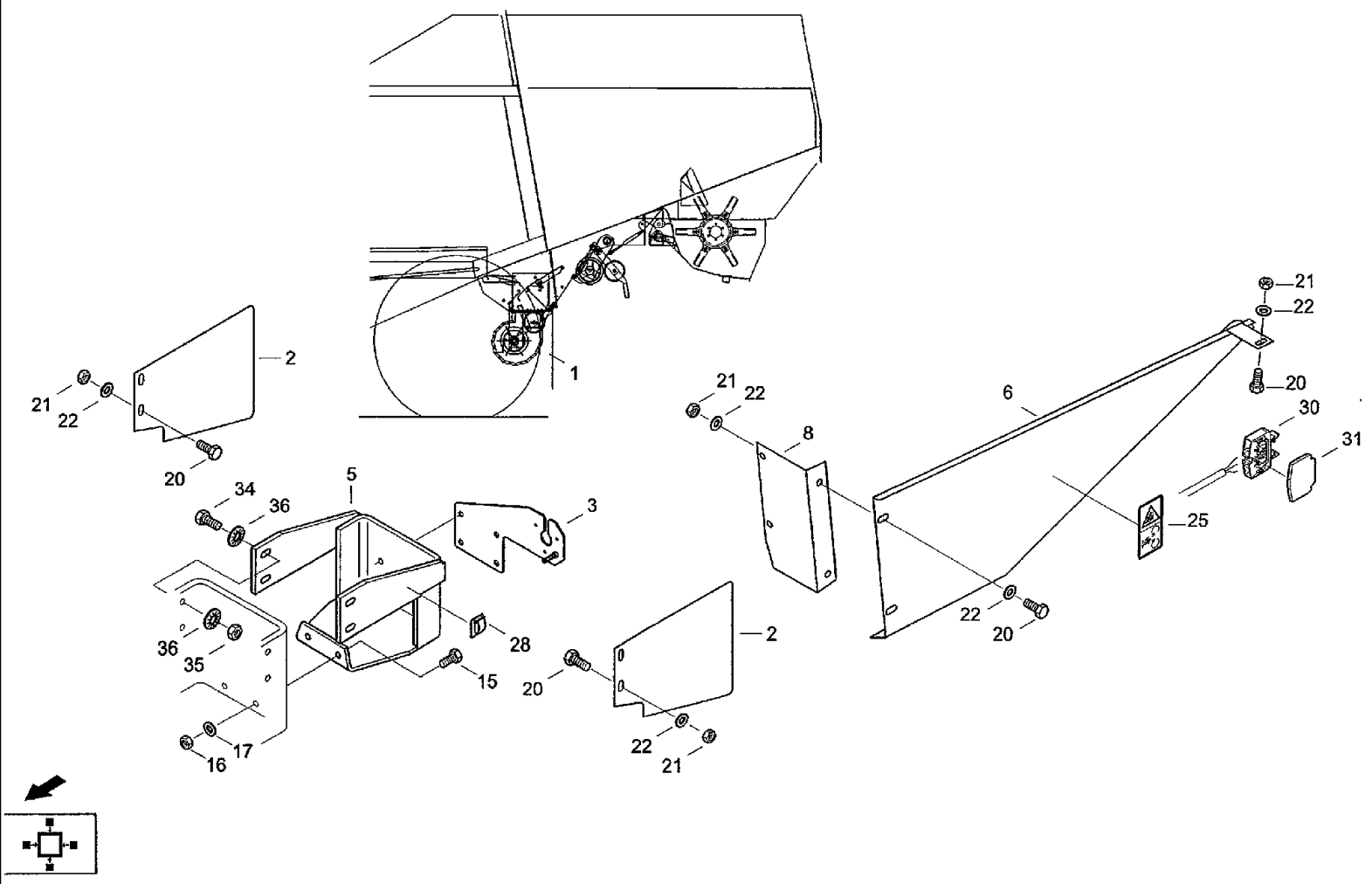
1
2
21
22
20
5
34
36
3
28
15
16
17
35
6
8
30
31
25

CF80 CASE IH CROSS FLOW COMBINE

J210 CHAFF DISPENSER [KPAB]

Ref	Part Number	Qty	Description
1	31316024	1	FRAME, Chaff dispenser
2	31348482	2	SUPPORT, Guide plate
3	31347914	1	SUPPORT, Plate
5	31302613	1	HOOK, Trailer coupling block h •
6	31344317	1	PROTECTION PLATE, Guard Kp2000
8	31344374	1	ANGLE, Angle
15	627-10035	2	BOLT, Hex, M10 x 35, 10.9, Full Thd, Hex bolt M10X35ISO401710.9
16	829-1410	2	NUT, M10, Cl 10, Hex nut M10 IS04032 10
17	06577003	2	WASHER, SPECIAL, Locking washer M10
20	614-8020	7	BOLT, Hex, M8 x 20, 8.8, Hex bolt M8x20IS040178,8
21	825-1408	7	NUT, M8, Cl 8,
22	06577028	9	WASHER, SPECIAL, Locking washer M8
25	060506652	1	DECAL, Symbol NR.21 BSB NR.449380
28	007067064	1	CLAMP, Cable strap ACC38-A-20
30	07090512	1	CLAMP, Through clip MINI
31	07090520	1	PLATE, Stop plate
34	627-12040	4	BOLT, Hex, M12 x 40, 10.9, Full Thd, Hex bolt M12x40IS0401710.9
35	829-1412	4	NUT, M12, Cl 10, Hex nut M12 ISO4032 10
36	06577060	8	WASHER, Locking washer B12

J211 GUARD [KPAB]

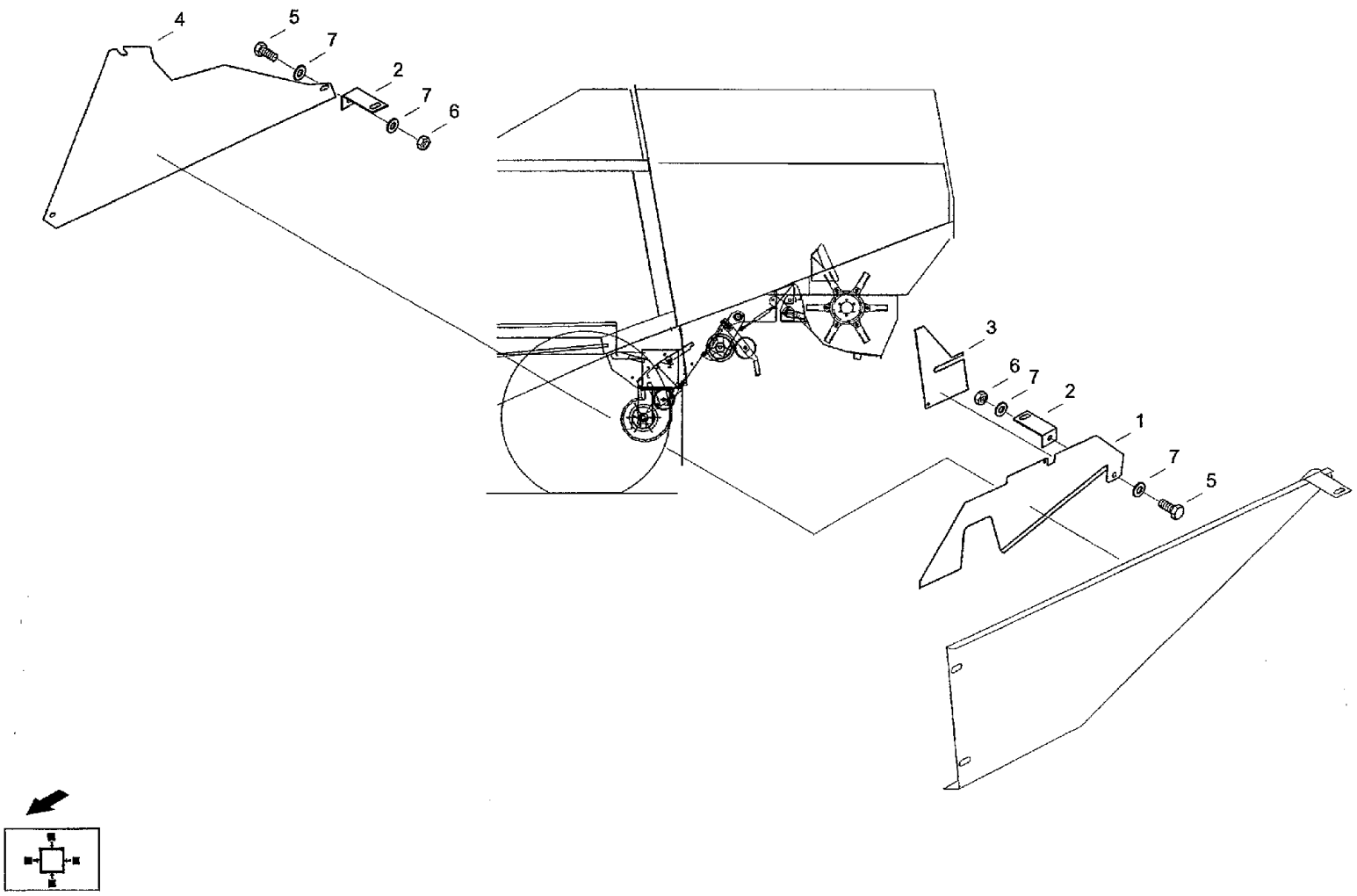

CF80 CASE IH CROSS FLOW COMBINE

J211 GUARD [KPAB]

Ref	Part Number	Qty	Description
1	31332668	1	SHEET, Chopper plate
2	31332651	2	ANGLE, Angle
3	31332676	1	SHEET, Cover plate
4	31348521	1	SHEET, Cover plate
5	614-8020	2	BOLT, Hex, M8 x 20, 8.8, Hex bolt M8x20ISO40178.8
6	825-1408	2	NUT, M8, Cl 8,
7	06577044	4	WASHER, SPECIAL, Locking washer B8

J213(01) DRIVE [KPAB]

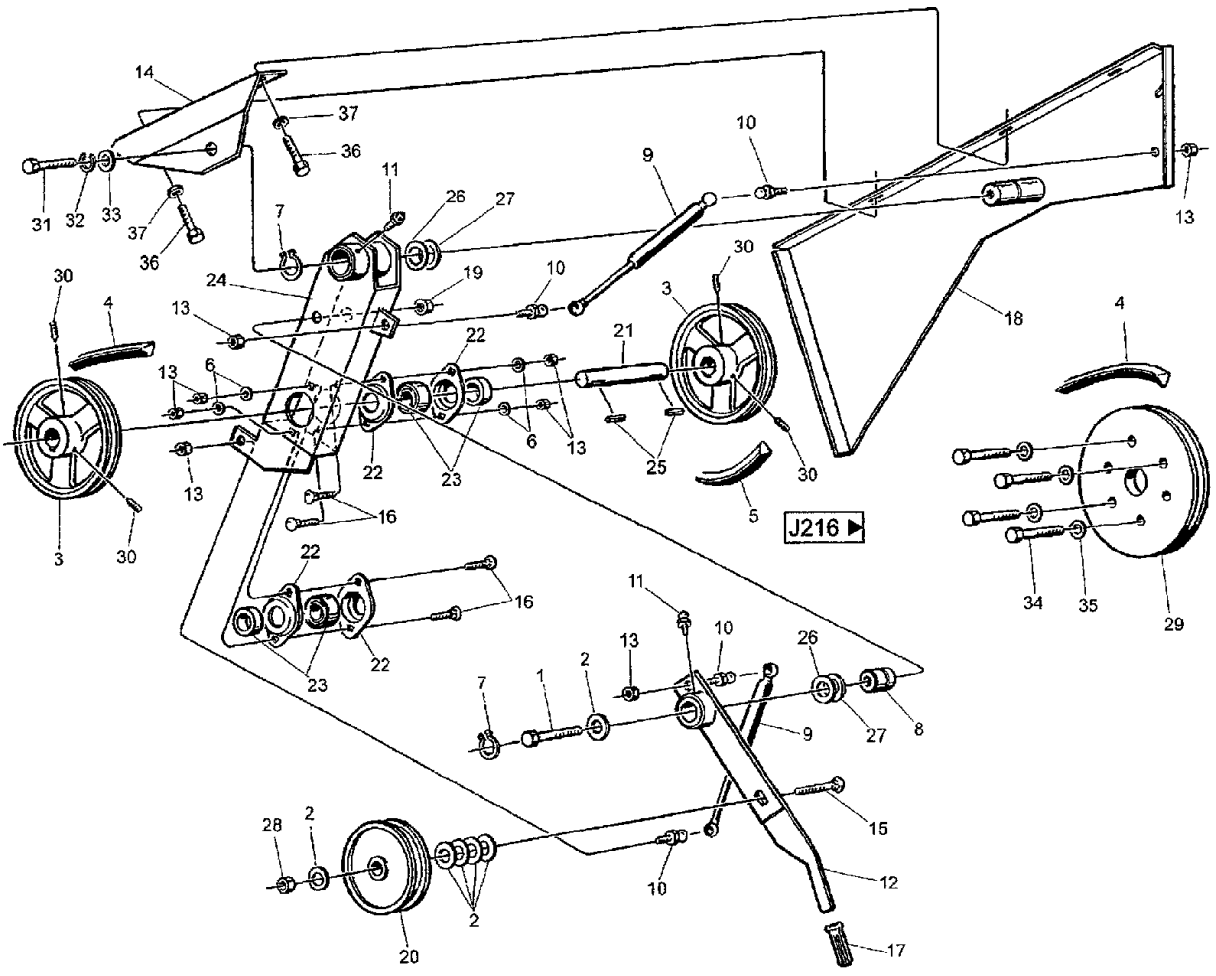

CF80 CASE IH CROSS FLOW COMBINE

J213(01) DRIVE [KPAB]

Ref	Part Number	Qty	Description
1	814-12065	1	BOLT, Hex, M12 x 65, 8.8, Hex bolt M12X65 IS04014 8.8
2	895-25012	8	WASHER, M12 x 37 x 3, Washer 13DIN9021 140HV
3	31333798	2	PULLEY, V-belt pulley
4	31333804	1	BELT, V-belt HACKSLER
5	31333812	1	BELT, V-belt GEBLASE
6	895-11008	4	WASHER, M8 x 16 x 1.6, Washer 8,4 DIN125 ST
7	800-5140	2	RING, SNAP, M40, Ext, Hvy, Snap ring 40x2,5 DIN471 FST
8	31333820	1	BEARING, Bearing journal
9	31333837	2	GAS STRUT, Gas shock absorber
10	770001932	4	BALL JOINT, Ball head
11	03617056	2	NIPPLE, LUBE, Grease nippel
12	31333845	1	SUPPORT, Tension roller retainer
13	832-46408	8	NUT, LOCK, M8 x 1.25, Cl 8,
14	31333853	1	SUPPORT, Support
15	811-12055	1	BOLT, CARRIAGE, Short NK, M12 x 55, Cl8.8, Flat-round-head screw M12x55DIN6038.8
16	07753092	4	SCREW, Flat-round-head screw M8x20 DIN603 8.8
17	31329840	1	HANDLE, Handle
18	31333861	1	PROTECTION PLATE, Supporting plate
19	06116075	1	NUT, Hex nut M12DIN69278
20	31333878	1	PULLEY, Idler
21	31333886	1	SHAFT, Shaft
22	31333894	4	HOUSING, BEARING, Bearing housing
23	97069318	2	BEARING, Grooved ball bearing RA25-NPP
24	31333900	1	SUPPORT, Clamp bridge
25	97031063	2	KEY, BUCKET TOOTHRT, Flat key A8x7x25 DIN6885 ST

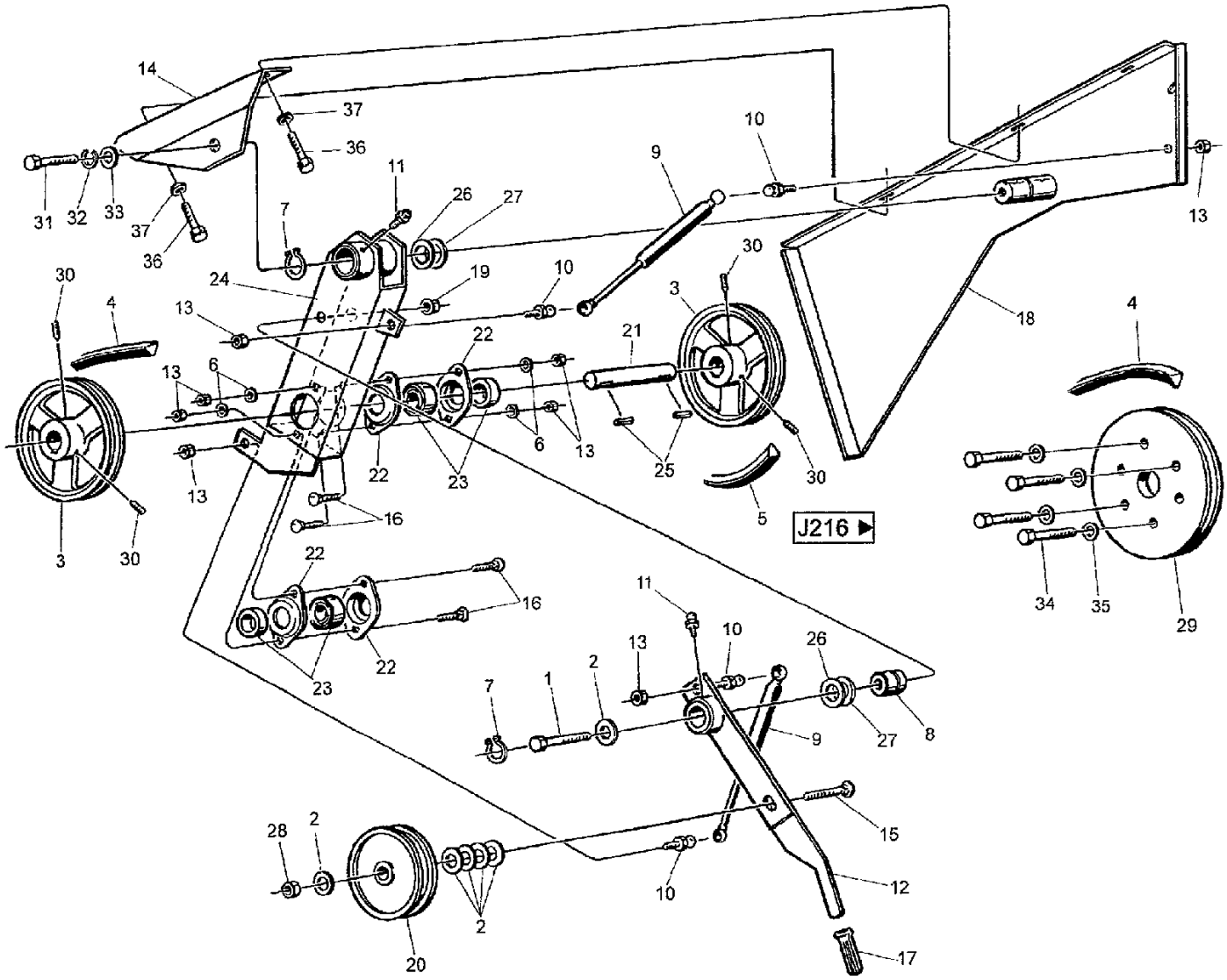
J216 ▶

Ref	Part Number	Qty	Description
29	31333917		PULLEY, V-belt pulley

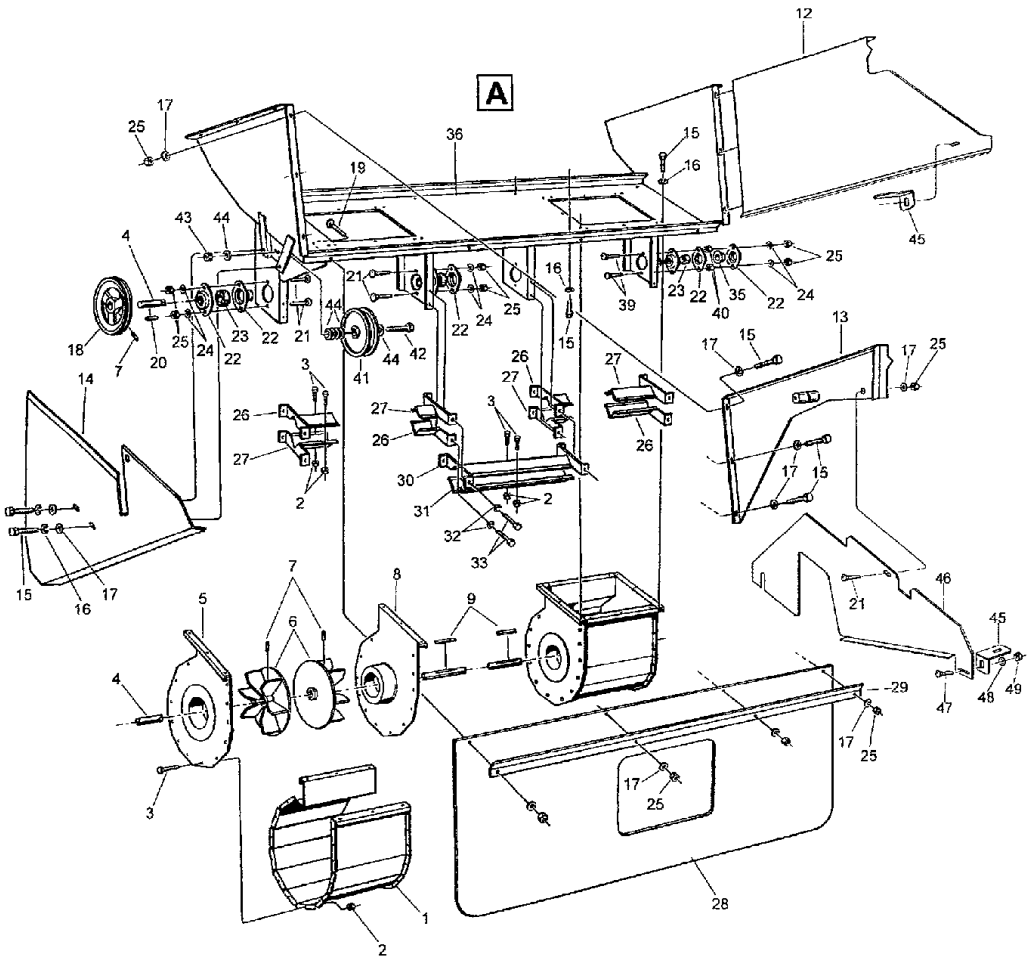
A
12
17
25
36
19
15
16
43
44
45
4
21
16
25
23
22
35
22
24
39
40
18
7
20
25
24
23
22
21
44
42
41
22
24
25
15
13
17
15
17
25
14
3
26
27
26
27
26
27
3
30
31
32
33
2
2
17
15
15
16
17
7
8
5
6
9
46
21
45
4
29
47
48
49
17
25
3
17
25
1
2
28

◀J213

CF80 CASE IH CROSS FLOW COMBINE

J216(01) FAN [KPAB]

Ref	Part Number	Qty	Description
1	31334524	2	PROTECTION PLATE, Plate housing
2	832-46406	62	NUT, LOCK, M6 x 1, Cl 8,
3	614-6012	62	BOLT, Hex, M6 x 12, 8.8, Hex bolt M6x12ISO40178.8
4	31334532	1	SHAFT, Fan shaft
5	31334540	2	PROTECTION PLATE, Side panel l
6	31334557	4	VENTILATOR, Blower
7	877-11016	6	SET SCREW, Hex Soc, M10 x 16, Cup Pt, Threaded pin M10x16DIN91645H
8	31334565	2	PROTECTION PLATE, Side panel r
9	03501375	2	SPLIT PIN/SAFETY PIN, Flat key A8x7x100DIN6885
10	31334573	1	DEFLECTOR, Chaff guide panel
11	31334581	1	SHEET, Spacer panel
12	31334598	1	SHEET, Cover plate r
13	31333861	1	PROTECTION PLATE, Cover plate l
14	31334604	1	SHEET, Guard
15	614-8025	48	BOLT, Hex, M8 x 25, 8.8,
16	06455855	42	WASHER, LOCK, Spring washer A8DIN128FST
17	895-11008	21	WASHER, M8 x 16 x 1.6, Washer 8.4DIN125ST
18	31333798	1	PULLEY, V-belt pulley
19	07753211	4	SCREW, Flat-round-head screw M8x25 DIN603 8.8
20	97031063	1	KEY, BUCKET TOOTHRT, Flat key A8x7x100DIN6885
21	07753092	5	SCREW, Flat-round-head screw M8x20 DIN603 8.8
22	31333894	7	HOUSING, BEARING, Bearing housing
23	03221409	3	BEARING, Grooved ball bearing RA25-NPPB
24	895-11008	6	WASHER, M8 x 16 x 1.6, Washer 8,4DIN125ST
25	832-46408	21	NUT, LOCK, M8 x 1.25, Cl 8,

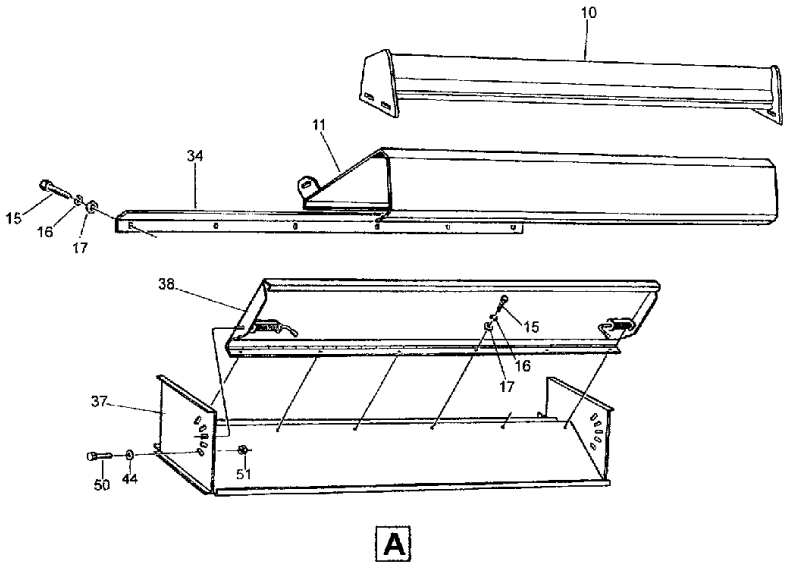
10
11
34
15
16
17
38
15
16
17
37
50
44
51
A

CF80 CASE IH CROSS FLOW COMBINE

J216(02) FAN [KPAB]

Ref	Part Number	Qty	Description
26	31334612	4	PROTECTOR, Shaft guard r, 1
27	31334967	4	PROTECTOR, Shaft guard r, 1
28	31334975	1	PAD, RUBBER, Rubber cloth
29	31334983	1	SLAT, Slat
30	31334991	1	PROTECTOR, Shaft guard m
31	31335002	1	PROTECTOR, Shaft guard m
32	06455742	16	WASHER, LOCK, Spring washer A6DIN128FST
33	614-6020	16	BOLT, Hex, M6 x 20, 8.8, Hex bolt M6x20ISO40178.8
34	31335010	1	SLAT, Slat
35	31335027	1	COVER, Cap
36	31335035	1	FRAME, Frame
37	31334741	1	FRAME, Air box
38	31334758	1	PROTECTION PLATE, Guide plate
39	07753228	2	SCREW, Flat-round-head screw M8x30 DIN603 8.8
40	825-1408	2	NUT, M8, Cl 8,
41	31333878	1	PULLEY, Idler
42	814-12060	1	BOLT, Hex, M12 x 60, 8.8, Hex bolt M12x60 ISO4014 8.8
43	06116235	1	NUT, Hex nut M12DIN9858
44	895-25012	8	WASHER, M12 x 37 x 3, Washer 13 DIN9021 140HV
45	03221603	2	SUPPORT, Support
46	03221604	1	PROTECTION PLATE, Cover plate l, u
47	07755576	2	SCREW, Flat-round-head screw M1 0x25 DIN603 8.8
49	06242023	2	NUT, Hex nut M10DIN69258
50	614-12025	2	BOLT, Hex, M12 x 25, 8.8, Hex bolt M12x25ISO40178.8
48	895-11010	2	WASHER, M10 x 20 x 2, Washer 10.5DIN125ST

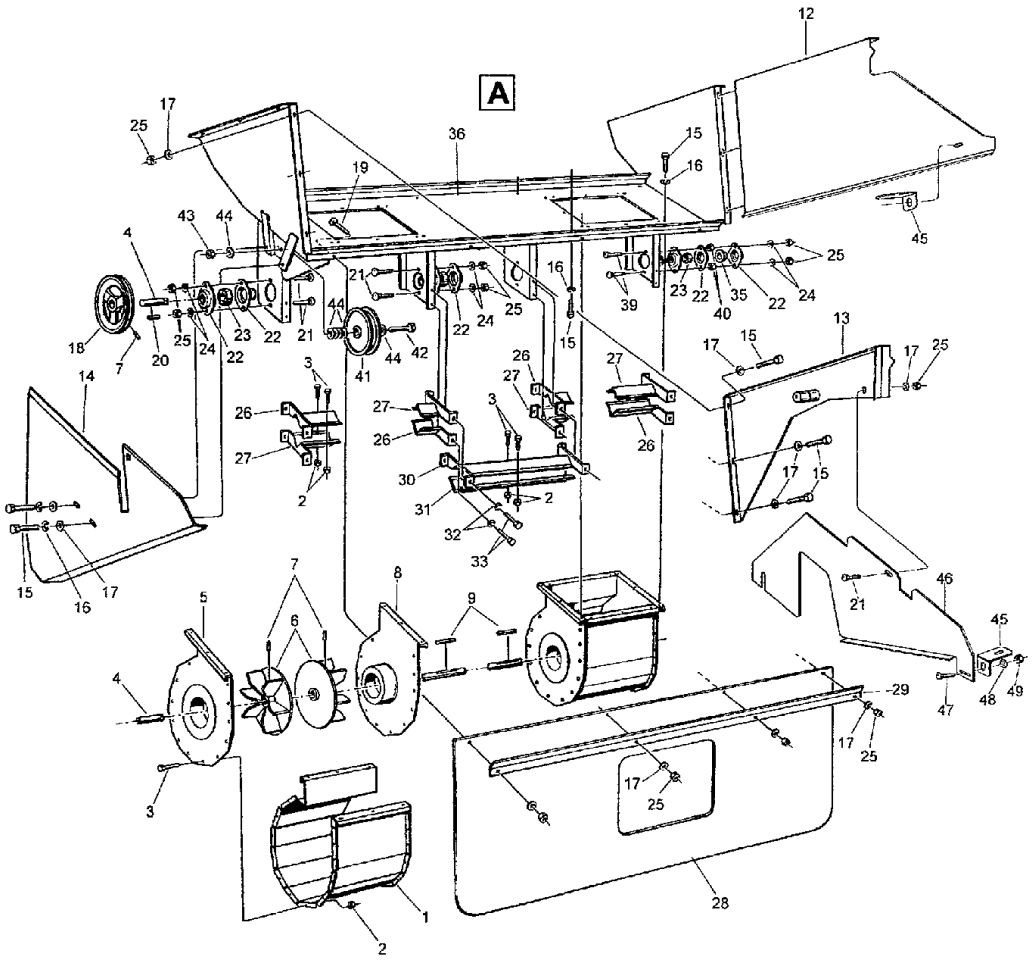
A
12
17
25
36
19
15
16
43
44
45
4
25
23
22
35
40
22
24
21
44
25
16
39
18
7
20
25
24
23
22
21
22
24
15
13
41
44
42
17
15
17
25
14
3
26
27
26
27
3
27
26
26
30
17
15
2
31
2
32
33
15
16
17
7
8
46
21
5
6
9
45
4
29
47
48
49
17
25
3
17
25
1
28
2

◀J213

CF80 CASE IH CROSS FLOW COMBINE

J216(03) FAN [KPAB]

Ref	Part Number	Qty	Description
51	770000626	2	NUT, Nut M12x20

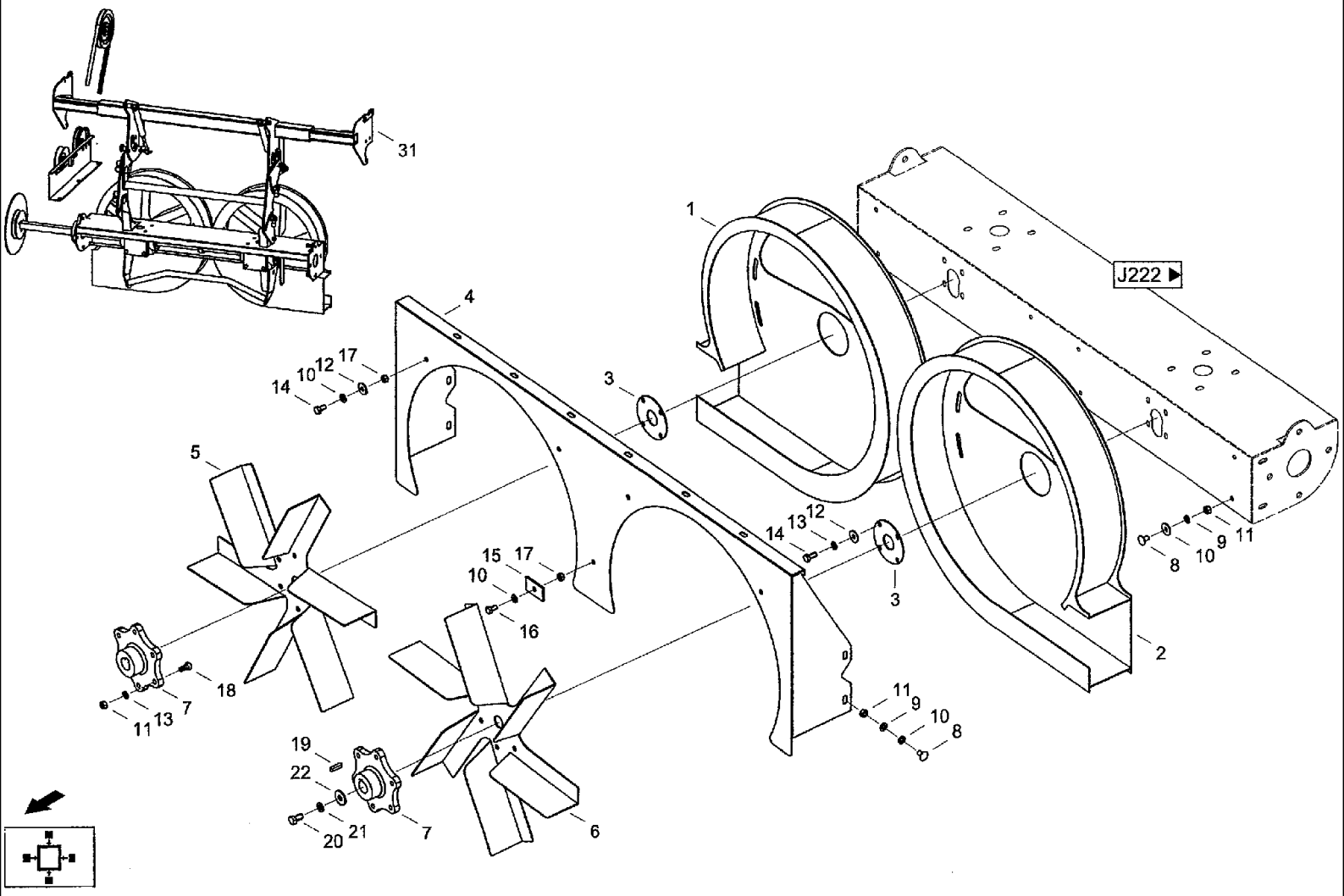
31
1
J222 ▶
4
3
14
10
12
17
5
15
17
10
16
18
7
11
13
19
22
20
21
7
6
14
13
12
3
11
9
10
8
8
10
9
11
2

CF80 CASE IH CROSS FLOW COMBINE

J220 CHAFF DISPENSER [1- HAULING]

Ref	Part Number	Qty	Description
1	03249442	1	HOUSING, Rotor housing r
2	03249450	1	HOUSING, Rotor housing 1
3	03249467	2	CENTERING RING, Centering disc
4	03249668	1	BAFFLE, Plate
5	03249475	1	VENTILATOR, Impeller r
6	03249506	1	VENTILATOR, Impeller 1
7	03249483	2	HUB, Hub F.FLOGELRAD
8	003780507	12	SCREW, Flat-round-head screw M8x16 DIN603 8.8
9	06501380	16	WASHER, CUP, Wave washer spring B8DIN137FST
10	895-11008	21	WASHER, M8 x 16 x 1.6, Washer 8.4DIN125ST
11	825-1408	24	NUT, M8, Cl 8,
12	895-25008	12	WASHER, M8 x 20 x 1.6, Washer 8,4 DIN9021 140HV
13	892-11008	20	WASHER, LOCK, M8, Spring washer A8 DIN 127 FST
14	614-8016	12	BOLT, Hex, M8 x 16, 8.8,
15	03221750	1	PLATE, Plate
16	614-8020	1	BOLT, Hex, M8 x 20, 8.8, Hex bolt M8x20ISO40178.8
17	06116155	5	NUT, Hex nut M8 DIN6925 8
18	614-8025	12	BOLT, Hex, M8 x 25, 8.8,
19	03502384	2	KEY, BUCKET TOOTHRT, Flat key A8x7x30 DIN6885
20	614-10020	2	BOLT, Hex, M10 x 20, 8.8, Full Thd,
21	892-11010	2	WASHER, LOCK, M10, Spring washer A10DIN127FST
22	06510285	2	WASHER, Washer 10.5DIN9021 100HV
31	31312978	1	FRAME ASSY, Chaff dispenser CF80

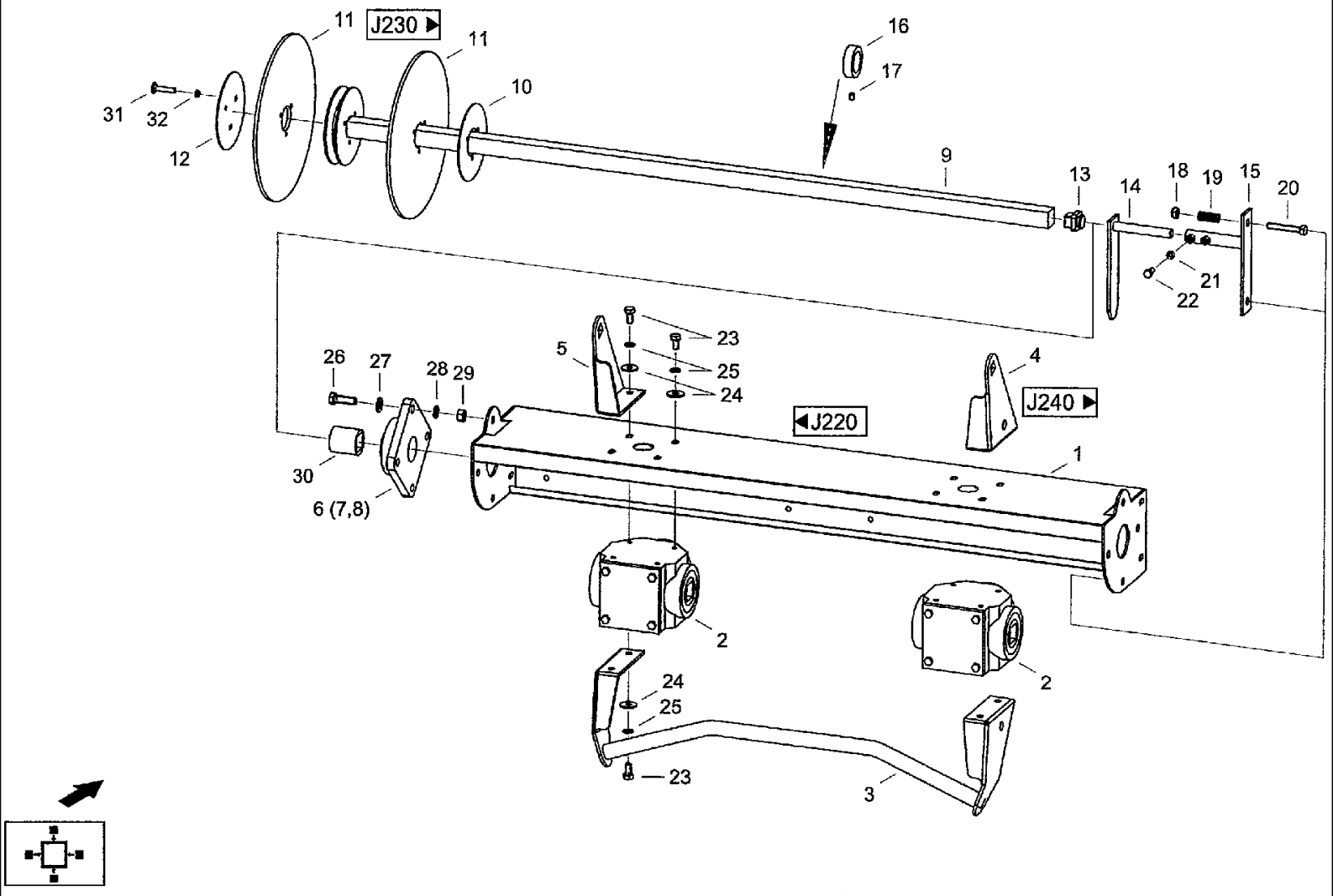
11
J230
11
10
16
17
31
32
12
9
13
14
18
19
15
20
21
22
23
25
24
5
4
26
27
28
29
J240
J220
1
30
6 (7,8)
2
2
24
25
23
3

CF80 CASE IH CROSS FLOW COMBINE

J222(01) CHAFF DISPENSER [2- HAULING]

Ref	Part Number	Qty	Description
1	03249434	1	FRAME, Frame
2	03249588	2	TRANSMISSION, Gearbox
3	03249290	1	GRIP, Handle
4	03249547	1	HOLDER, Support r
5	03249530	1	HOLDER, Support l
6	03249602	1	BEARING, Flanged bearing FG56209
7	03249610	1	HOUSING, BEARING, Bearing housing FG209S
8	03249627	1	BEARING, BALL, Ball beaming 56209
9	03249274	1	SHAFT, DRIVE, Drive shaft
10	03221752	1	WASHER, Washer
11	03249651	2	WASHER, RUBBER, Rubber disc
12	03221754	1	WASHER, Washer
13	03221762	1	PLUG, Plug
14	03249571	1	LEVER, CONTROL, Gear-shift lever
15	03249555	1	PIVOT, Switch lever foot
16	03249596	1	RING, LOCKING, Adjusting ring
17	060513981	1	PIN, Threaded pin M8x12DIN91645H
18	97012032	2	NUT, Hex nut M10DIN9858
19	03249354	2	COMPRESSION SPRING, Pressure spring
20	614-10065	2	BOLT, Hex, M10 x 65, 8.8, Full Thd, Hex bolt M10X65ISO40178.8
21	825-1408	2	NUT, M8, Cl 8,
22	614-8020	2	BOLT, Hex, M8 x 20, 8.8, Hex bolt M8x20ISO40178.8
23	614-10020	12	BOLT, Hex, M10 x 20, 8.8, Full Thd,
24	06510285	12	WASHER, Washer 10,5 DIN9021 100HV
25	892-11010	12	WASHER, LOCK, M10, Spring washer A10DIN127FST

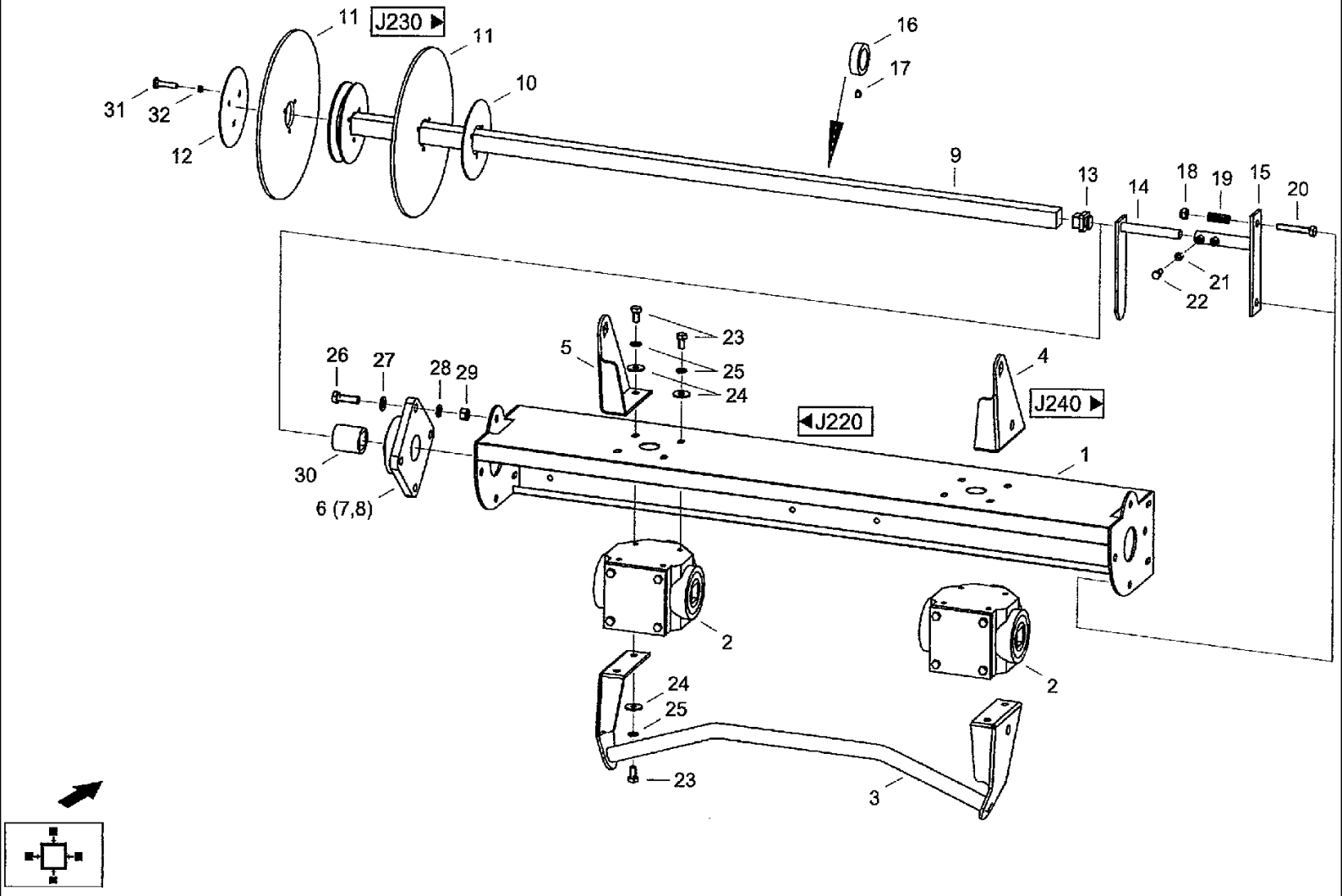
11
J230 ▶
11
10
16
17
31
32
12
9
13
14
18
19
15
20
21
22
23
25
24
5
26
27
28
29
4
J240 ▶
◀J220
1
30
6 (7,8)
2
2
24
25
23
3

CF80 CASE IH CROSS FLOW COMBINE

J222(02) CHAFF DISPENSER [2- HAULING]

Ref	Part Number	Qty	Description
26	614-12040	4	BOLT, Hex, M12 x 40, 8.8, Full Thd,
27	895-11012	4	WASHER, M12 x 24 x 2.5, Washer 13 DIN125 ST
28	892-11012	4	WASHER, LOCK, M12, Spring washer A12 DIN127 FST
29	825-1412	4	NUT, M12, Cl 8, Hex nut M12ISO40328
30	03249635	1	PLASTIC RING, Bushing
31	07751837	3	SCREW, Flat-round-head screw M6x45 DIN603 4.6
32	060527480	3	NUT, Hex nut M6 DIN985 8

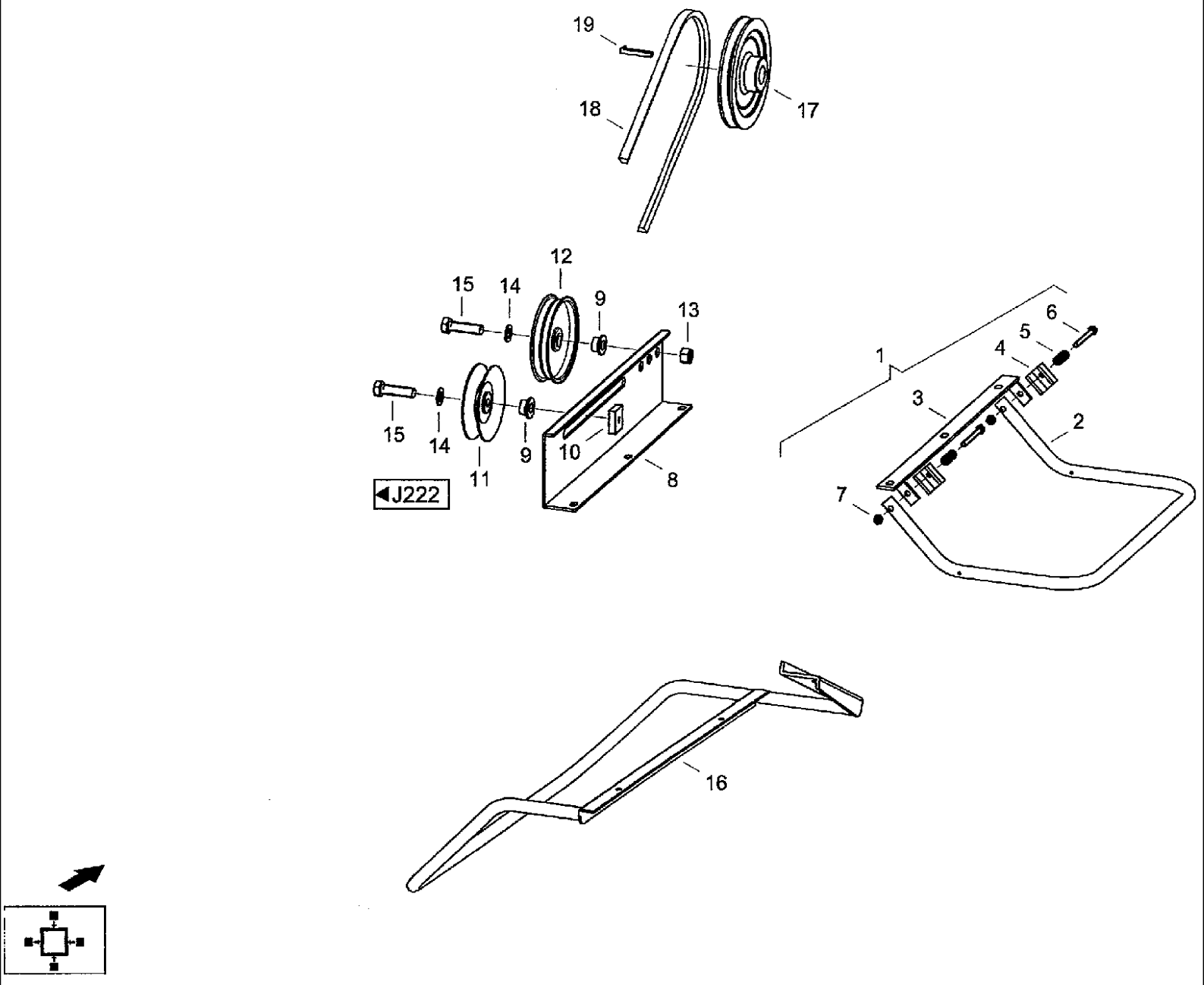
19
18
17
12
15
14
9
13
15
14
9
10
11
8
◀J222
1
6
5
4
3
2
7
16

CF80 CASE IH CROSS FLOW COMBINE

J230 DRIVE [HAULING]

Ref	Part Number	Qty	Description
1	03249313	1	BOW, Guard arm KLAPPBAR GR.
2	03249321	1	BOW, Guard arm KLAPPBAR
3	03249338	1	SUPPORT, Tube support
4	03249346	2	LOCK, STOP, Arresting piece
5	03249354	2	COMPRESSION SPRING, Pressure spring
6	614-8080	2	BOLT, Hex, M8 x 80, 8.8, Full Thd, Hex bolt M8x80IS040178.8
7	06116155	2	NUT, Hex nut M8 DIN6925 8
8	03249241	1	TENSIONER, Tensioning bar
9	03249258	2	BUSHING, Flanged bushing
10	03249305	1	NUT, Square nut M12
11	03249266	1	TIGHTENER SHEAVE, Profile tensioning roller
12	03717076	1	TIGHTENER SHEAVE, Idler RSRB.16.159.LO
13	825-1416	2	NUT, M16, Cl 8,
14	06501493	2	WASHER, SPRING, Wave washer spring B16DIN137FST
15	814-16055	2	BOLT, Hex, M16 x 55, 8.8, Full Thd, Bolt, Hex, M16 x 55, 8.8, Full Thd, ISO4014
16	03249282	1	BOW, Guard arm FEST
17	03249217	1	PULLEY, Drive pulley SCHUTTLERWELLE
18	03249225	1	BELT, V-belt
19	03502343	1	KEY, Gib-head key 8x7x50 DIN6887

J240 SLEWING BOW [HAULING]

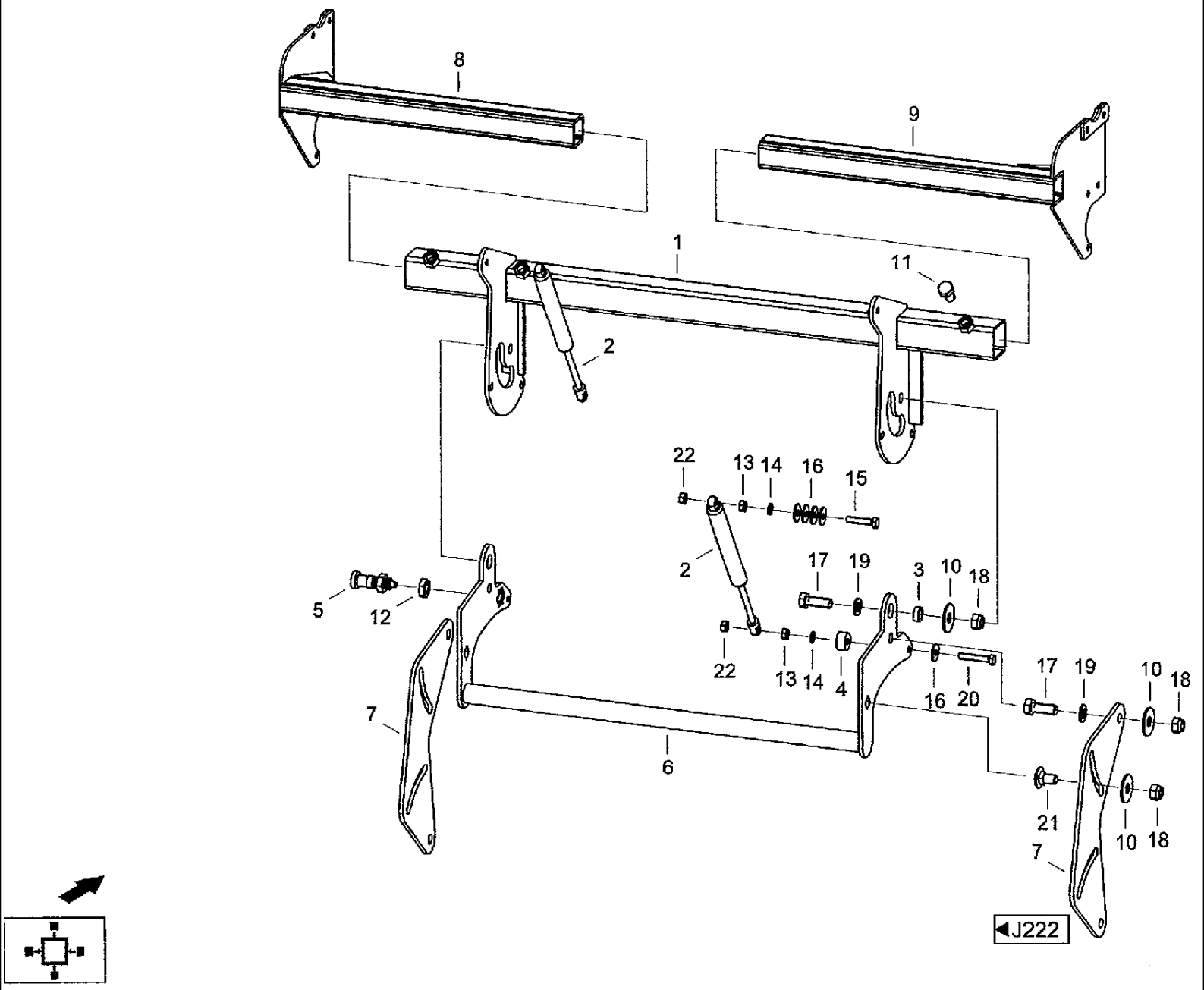

CF80 CASE IH CROSS FLOW COMBINE

J240 SLEWING BOW [HAULING]

Ref	Part Number	Qty	Description
1	03249362	1	HOLDER, Support
2	03249387	2	CYLINDER, GAS, Throttle spring
3	03249395	2	BUSHING, Sleeve
4	03249370	2	BUSHING, Spacer bushing
5	03249418	1	PIN, LARGE, Indexing bolt
6	03249426	1	BOW, Slewing bow
7	03249514	2	SHIN, Swivel plate
8	03249233	1	SUPPORT, Console 1
9	03249200	1	SUPPORT, Console r
10	003784430	6	WASHER, Washer A17 DIN9021 ST
11	614-16025	4	BOLT, Hex, M16 x 25, 8.8, Full Thd, Hex, M16 x 25, 8.8, Full Thd, ISO4017
12	97016257	1	NUT, Hex nut M20x1,5DIN9368
13	825-1410	4	NUT, M10, Cl 8,
14	892-11010	4	WASHER, LOCK, M10, Spring washer A10DIN127FST
15	614-10050	2	BOLT, Hex, M10 x 50, 8.8, Full Thd, Hex bolt M10x50ISO40178.8
16	895-10010	10	WASHER, M10 x 20 x 2, Washer 10.5DIN125ST
17	614-16040	4	SCREW, Hex, M16 x 40, 8.8,
18	06242064	6	NUT, Hex nut M16 DIN6925 8
19	895-10016	4	WASHER, M16 x 30 x 3, Washer 17DIN125ST
20	614-10060	2	BOLT, Hex, M10 x 60, 8.8, Full Thd, Hex bolt M10x60ISO40178.8
21	07750602	2	SCREW, Flat-round-head screw M1 6x40 DIN603 8.8
22	97012032	4	NUT, Hex nut M10DIN9858



1

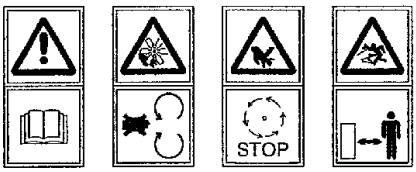

2 3 4 5

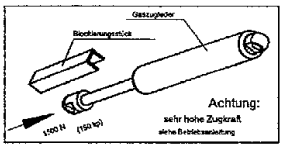

9



6 7



8

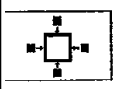

CF80 CASE IH CROSS FLOW COMBINE

J250 LETTERING [HAULING]

Ref	Part Number	Qty	Description
1	31331892	1	DECAL, Lettering
2	09168106	1	DECAL, Symbol BETRIEBSANLEIT.LESEN
3	09170045	2	DECAL, Symbol B.BETR.SCHUTZ GESCHL
4	09165378	2	DECAL, Symbol STOP ABWARTEN-HAND
5	09164883	4	DECAL, Symbol FLUGKORPER
6	31331868	1	DECAL, Direction arrow 1
7	31331876	1	DECAL, Direction arrow r
8	31331884	1	DECAL, Lube arrow
9	03221759	2	LABEL, Signboard FEDERBLOCKIERUNG

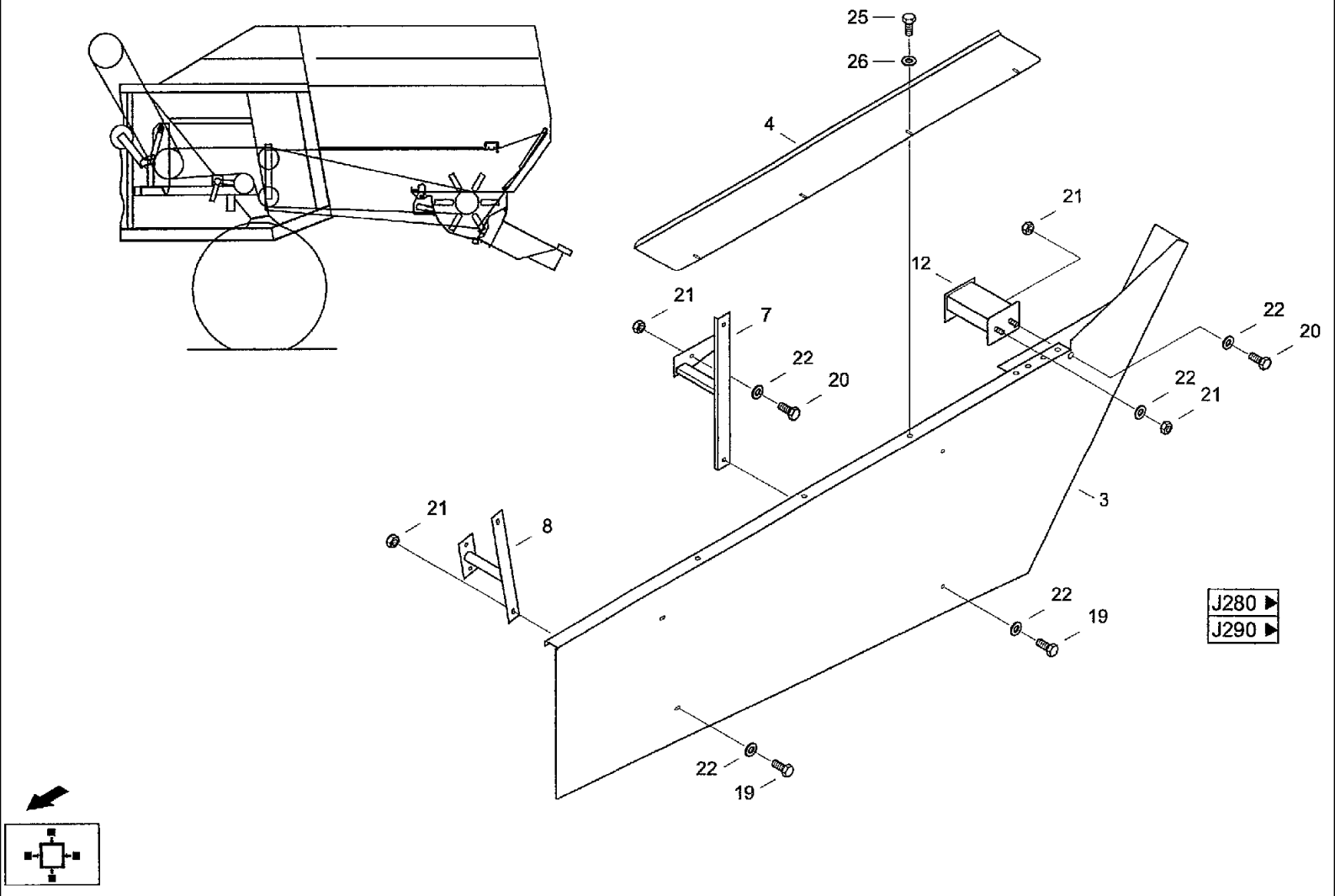
25
26
4
21
12
21
7
22
20
22
20
22
21
3
21
8
22
19
J280
J290
22
19

CF80 CASE IH CROSS FLOW COMBINE

J260 STRAW CHOPPER, ELECTRICALLY ADJUSTABLE- BELT GUARD

Ref	Part Number	Qty	Description	
3	31310164	1	PROTECTION PLATE, Guard	ж026-00.00.110 защита
4	31343896	1	SHEET, Panel	ж026-00.00.101 накладка
7	31304350	1	SUPPORT, Support	ж026-00.00.200 крепление
8	31308194	1	SUPPORT, Support	ж026-00.00.300 крепление
12	31308266	1	ANCHOR, Intermediate piece	ж026-00.00.400 проставка
19	614-8016	6	BOLT, Hex, M8 x 16, 8.8,	
20	614-8025	3	BOLT, Hex, M8 x 25, 8.8,	
21	825-1408	9	NUT, M8, Cl 8,	
22	06577044	13	WASHER, SPECIAL, Locking washer B8	
25	614-6014	4	BOLT, Hex, M6 x 14, 8.8, Full Thd, Hex bolt M6X14ISO40178.8	
26	06577036	4	WASHER, SPECIAL, Locking washer M6	

CF80 CASE IH CROSS FLOW COMBINE

J262 STRAW CHOPPER, ELECTRICALLY ADJUSTABLE- DISTRIBUTING BOX

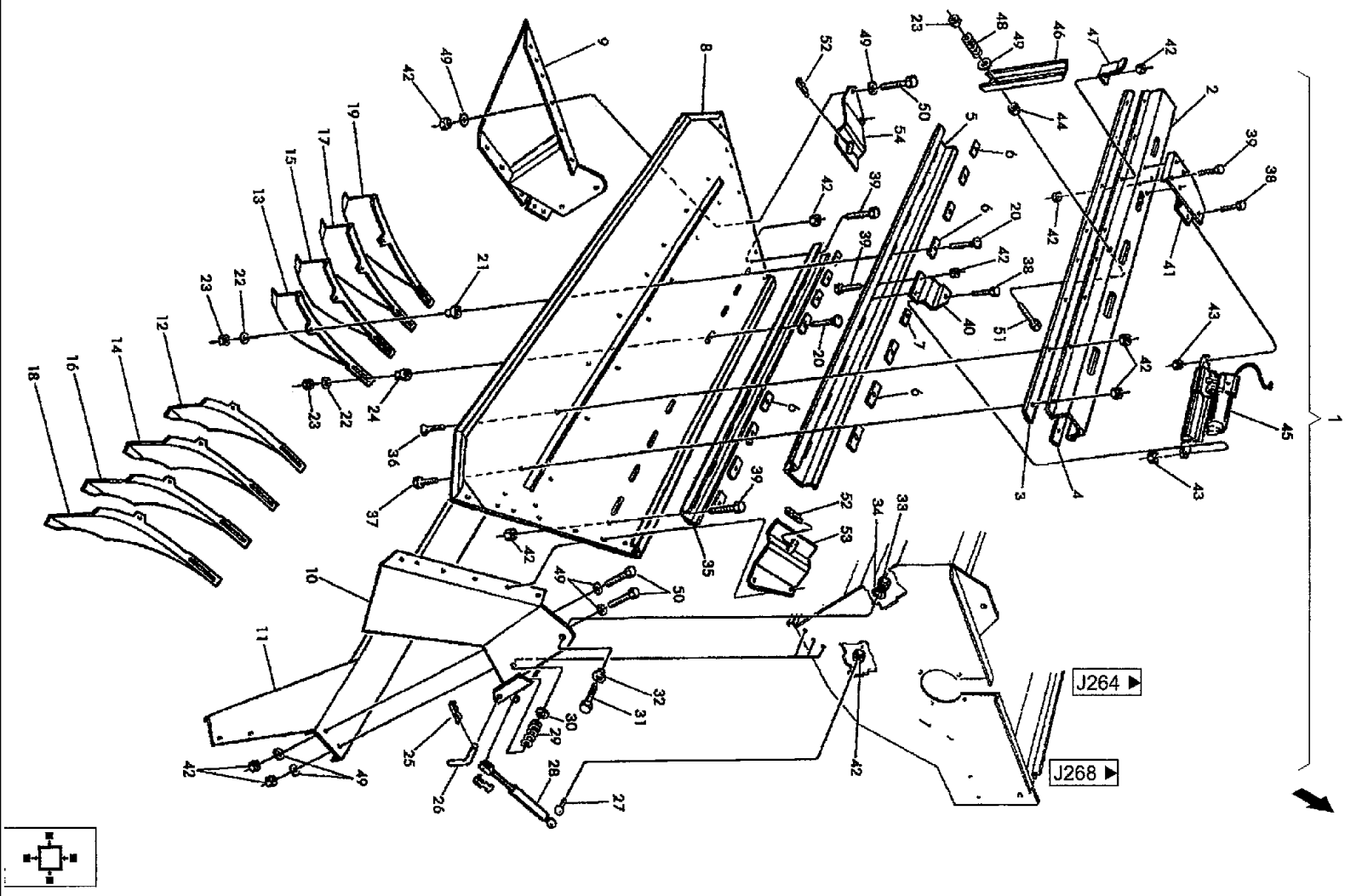

CF80 CASE IH CROSS FLOW COMBINE

J262 STRAW CHOPPER, ELECTRICALLY ADJUSTABLE- DISTRIBUTING BOX

Ref	Part Number	Qty	Description
1	03221410	1	FRAME ASSY, Distributing box k
2	31329945	1	BAR, Rail h ж037-00.00.001 шина
3	31329961	1	BAR, Wear strip
4	31329953	1	BAR, Wear strip V
5	31329978	1	SLAT, Spool
6	31329986	15	RAIL, Cover rail
7	31329994	1	RAIL, Cover rail
8	31330006	1	SHEET, Upper part
9	31330014	1	PROTECTION PLATE, Side panel l
10	31330022	1	PROTECTION PLATE, Side panel r
11	31330030	1	BAR, Bottom
12	31330047	1	FIN, Scatter vane r, Nr.1
13	31330055	1	FIN, Scatter vane l, Nr.1
14	31330063	1	FIN, Scatter vane r, Nr.2
15	31330071	1	FIN, Scatter vane l, Nr.2
16	31330088	1	FIN, Scatter vane r, Nr.3
17	31330096	1	FIN, Scatter vane l, Nr.3
18	31330102	1	FIN, Scatter vane r, Nr.4
19	31330110	1	FIN, Scatter vane l, Nr.4
20	07753211	16	SCREW, Flat-round-head screw M8x25 DIN603 8.8
21	31330127	8	SPACER, RING, Spacer ring
22	06502638	16	WASHER, Washer R9DIN440100HV
23	06116155	17	NUT, Hex nut M8 DIN6925 8
24	31330135	8	RING, Spacer ring
25	03291083	2	SPLIT PIN/SAFETY PIN, Spring clip 2,5x10x45

J262(01) STRAW CHOPPER, ELECTRICALLY ADJUSTABLE- DISTRIBUTING BOX

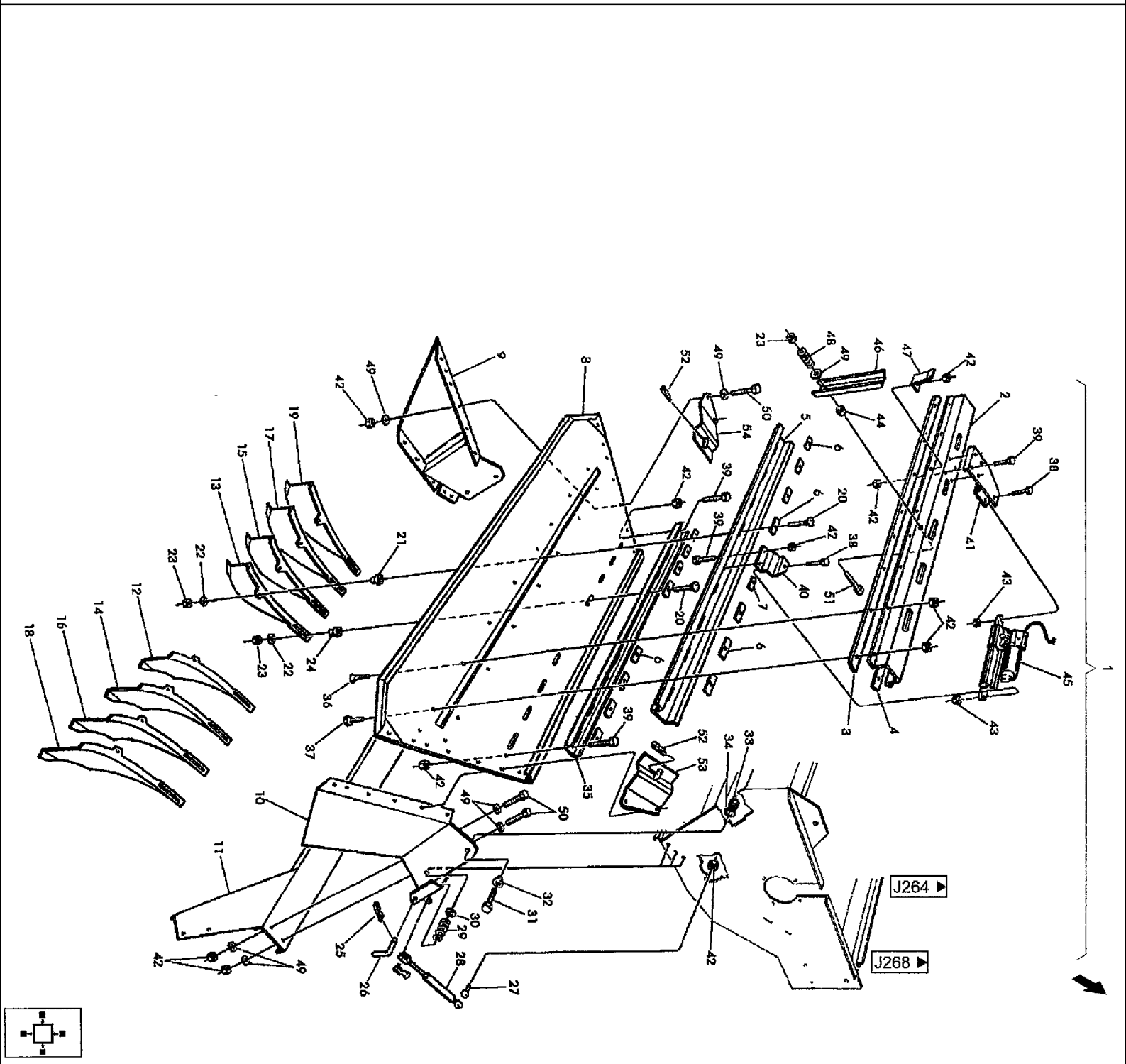

CF80 CASE IH CROSS FLOW COMBINE

J262(01) STRAW CHOPPER, ELECTRICALLY ADJUSTABLE- DISTRIBUTING BOX

Ref	Part Number	Qty	Description
26	31330143	2	LEVER, Lever
27	770001932	2	BALL JOINT, Ball head
28	31330151	2	CYLINDER ASSY., Gas shock absorber
29	31330168	2	COMPRESSION SPRING, Pressure spring
30	006509371	2	WASHER, Washer 14DIN126
31	614-12040	2	BOLT, Hex, M12 x 40, 8.8, Full Thd,
32	31330176	2	SPACER, Sleeve
33	832-46412	2	NUT, LOCK, M12 x 1.75, Cl 8, Hex nut 12DIN9808
34	770002162	2	WASHER, Washer
35	31330184	1	SLAT, Rail
36	06078308	10	SCREW, Countersunk screw M8x30 DIN7991 8.8
37	614-8030	5	BOLT, Hex, M8 x 30, 8.8, Hex bolt M8x30ISO40178.8
38	614-10045	2	SCREW, Hex, M10 x 45, 8.8, Full Thd, Hex bolt M10X45ISO40178.8
39	614-8016	6	BOLT, Hex, M8 x 16, 8.8,
40	31330192	1	SUPPORT, Support u, Stellmotor
41	31330207	1	SUPPORT, Support o, Stellmotor
42	832-46408	48	NUT, LOCK, M8 x 1.25, Cl 8,
43	832-46410	2	NUT, LOCK, M10 x 1.5, Cl 8, Hex nut 10DIN9808
44	825-1408	1	NUT, M8, Cl 8,
45	31330215	1	MOTOR, ELECTRIC, Actuating motor k
46	31330223	1	SUPPORT, Support
47	31330231	1	SUPPORT, Support
48	31330168	1	COMPRESSION SPRING, Pressure spring
49	06562062	48	WASHER, Washer 8,4 DIN7349 ST
50	614-8025	24	BOLT, Hex, M8 x 25, 8.8,

J262(02) STRAW CHOPPER, ELECTRICALLY ADJUSTABLE- DISTRIBUTING BOX

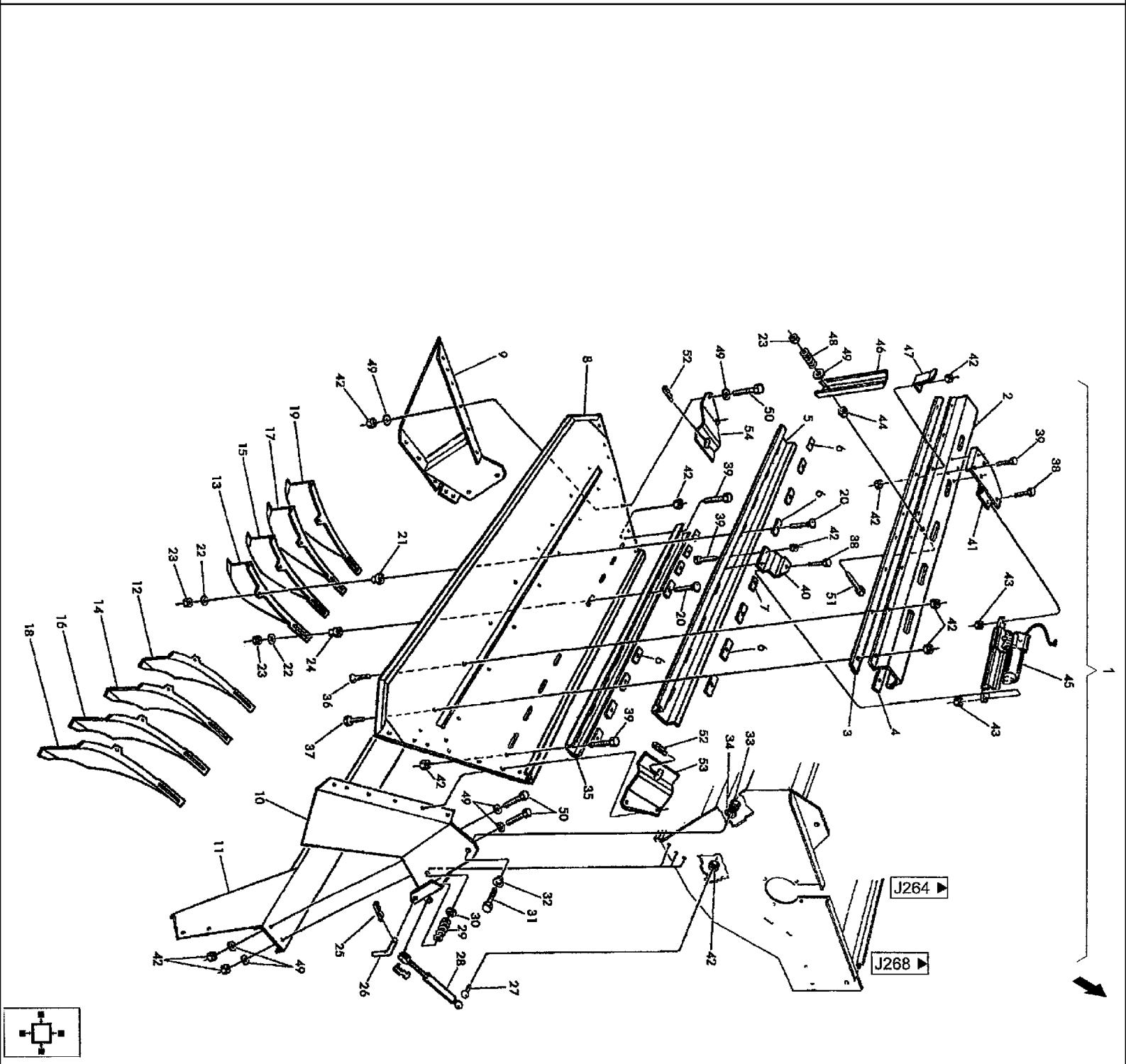

CF80 CASE IH CROSS FLOW COMBINE

J262(02) STRAW CHOPPER, ELECTRICALLY ADJUSTABLE- DISTRIBUTING BOX

Ref	Part Number	Qty	Description
51	614-8050	1	BOLT, Hex, M8 x 50, 8.8, Full Thd, Hex bolt M8X50ISO40178.8
52	03291091	2	SPLIT PIN/SAFETY PIN, Splint pin 3,5x17x67
53	03221411	1	SUPPORT, Support r, SCHWADRECHEN
54	03221412	1	SUPPORT, Support I, SCHWADRECHEN

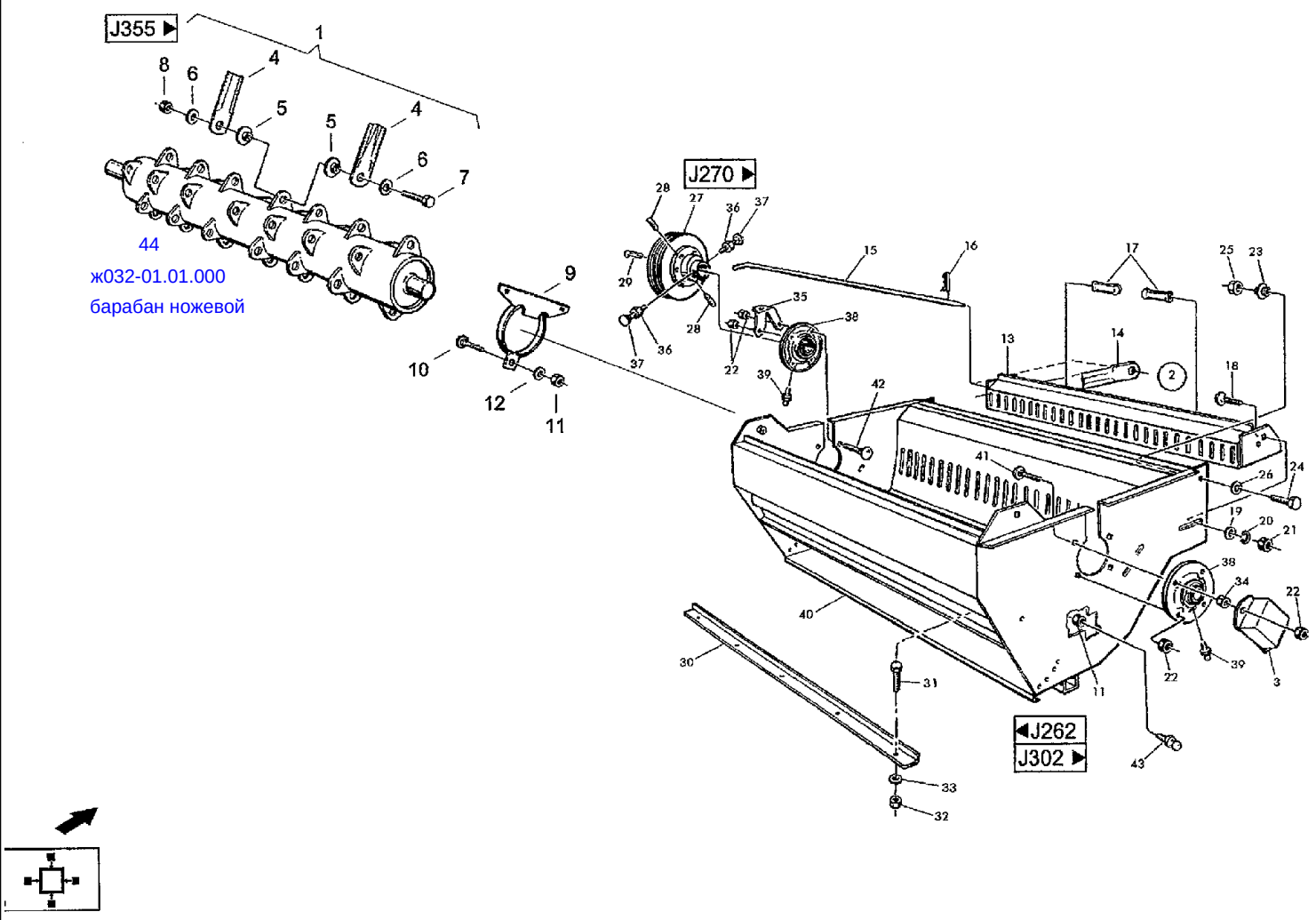
J355
J270
J262
J302
44
ж032-01.01.000
барабан ножевой

CF80 CASE IH CROSS FLOW COMBINE

J264(01) STRAW CHOPPER, ELECTRICALLY ADJUSTABLE- CHOPPER HOUSING

Ref	Part Number	Qty	Description
1	31329736	2	ROTOR, Mallet drum k
2	31329744	2	FRAME, Blade box k
3	31329752	2	PROTECTOR, Shaft guard ж032-00.00.003 кожух
4	31329760	176	KNIFE, Knife GEZ. 53800-3 нож
5	31329777	176	BUSHING, Sleeve ис-100.203
6	31329785	176	WASHER, Spacer washer ис-100.202 шайба
7	770000618	88	SCREW, Screw M10x50 10.9
8	770000634	88	NUT, Nut M10
9	31329793	4	SUPPORT, Wrap prevention ж032-02.00.000 защита
10	07753092	12	SCREW, Flat-round-head screw M8x20 DIN603 8.8
11	832-46408	16	NUT, LOCK, M8 x 1.25, Cl 8,
12	06562062	12	WASHER, Washer 8,4 DIN7349 ST
13	31329808	2	SUPPORT, Blade box ж032-01.01.000 ящик ножевой
14	31329816	64	KNIFE, Knife 50028-3 нож
15	31329824	2	STEM, Blade rod ж031-04.00.001 стержень
16	03291083	2	SPLIT PIN/SAFETY PIN, Spring clip 2,5x10x45
17	31329840	4	HANDLE, Handle
18	07753107	4	SCREW, Flat-round-head screw M12x30 DIN603 8.8
19	770002162	4	WASHER, Washer
20	06455863	4	WASHER, LOCK, Spring washer A12 DIN128 FST
21	825-1412	4	NUT, M12, Cl 8, Hex nut M12 ISO4032 8
22	06116075	16	NUT, Hex nut M12 DIN6927 8
23	31329857	4	SPACER, Sleeve
24	614-16055	4	BOLT, Hex, M16 x 55, 8.8, Full Thd, Bolt, Hex, M16 x 55, 8.8, Full Thd, ISO4017
25	832-10416	4	NUT, LOCK, M16 x 2, Cl 8, Hex nut M16DIN9828
26		12	ис-100.205 шайба

J264(02) STRAW CHOPPER, ELECTRICALLY ADJUSTABLE- CHOPPER HOUSING

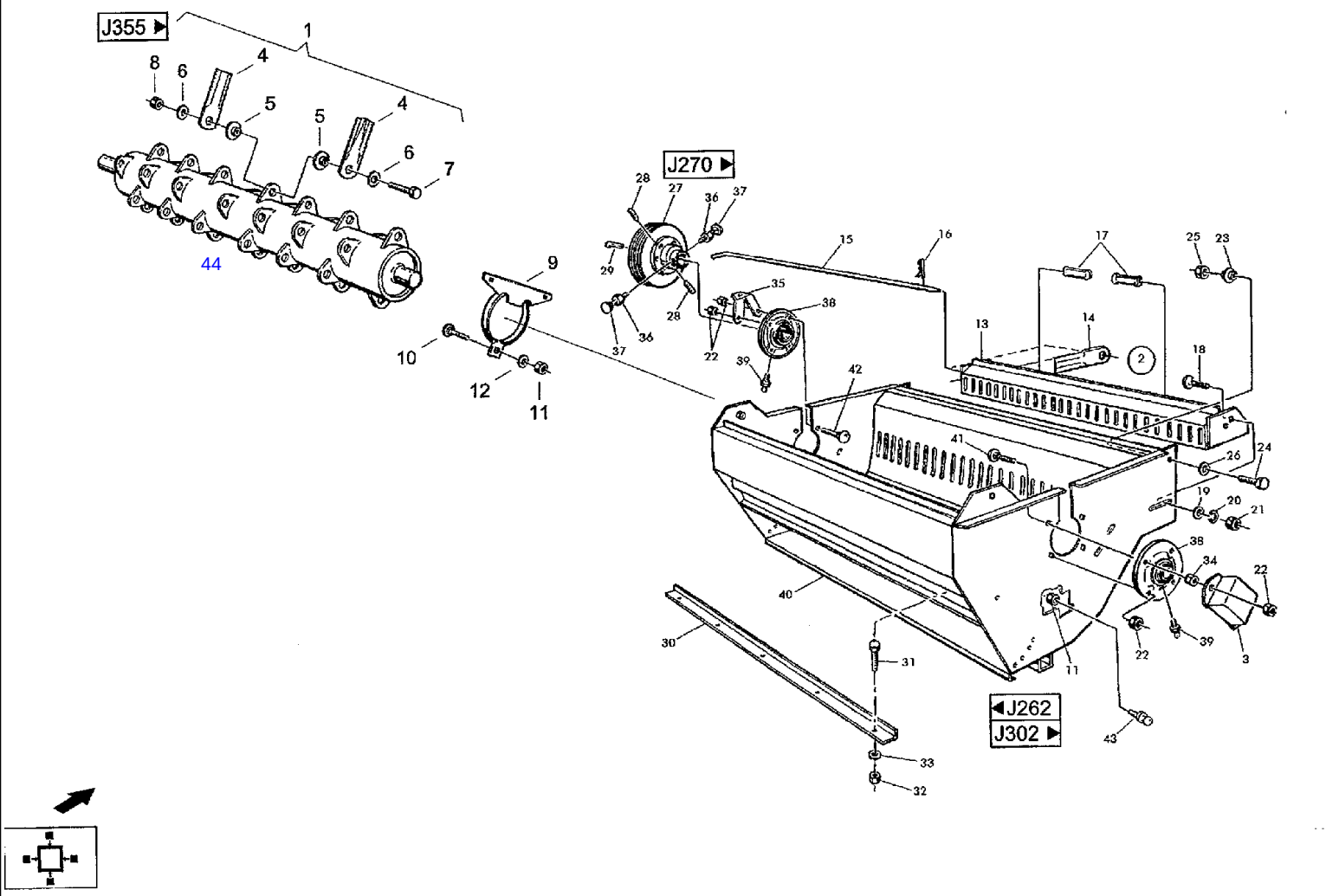

CF80 CASE IH CROSS FLOW COMBINE

J264(02) STRAW CHOPPER, ELECTRICALLY ADJUSTABLE- CHOPPER HOUSING

Ref	Part Number	Qty	Description
26	006509941	4	WASHER, Washer 18-A3CDIN126
27	31329865	2	PULLEY, V-belt pulley ж032-00.00.006 шкив
28	97013743	4	PIN, Threaded pin M10x16DIN9148.8
29	003502431	2	KEY, Gib-head key 10x8x63 DIN6887
30	03221413	2	BAR, Friction bar ж032-00.00.005 планка терочная
31	614-10020	24	BOLT, Hex, M10 x 20, 8.8, Full Thd,
32	832-46410	24	NUT, LOCK, M10 x 1.5, Cl 8, Hex nut VM10DIN9808
33	06562087	24	WASHER, Washer 10.5DIN7349ST
34	825-1412	4	NUT, M12, Cl 8, Hex nut M12 ISO4032 8
35	31329881	2	SUPPORT, Support ж032-00.00.004 кронштейн датчика
36	825-1410	4	NUT, M10, Cl 8,
37	03291075	4	SCREW, Screw
38	31329904	4	CARRIER, BEARING, Ball beaming k. RFE50
39	03617160	4	NIPPLE, LUBE, Grease nippel AR1/8ZOLL DIN71412
40	31329912	2	HOUSING, Chopper frame ж032-03.00.000 рама измельчителя
41	97001842	4	SCREW, Flat-round-head screw M12x45DIN603
42	07753123	12	SCREW, Flat-round-head screw M12x35DIN6038.8
43	770001932	4	BALL JOINT, Ball head
44		1	барабан ножевой
45		12	ис-100.205 шайба
46		8	ис-100.206 шайба
47		8	646123 шайба
48		1	ж032-00.00.002 кольцо
49		2	ж032-00.00.001 втулка

J268(01) STRAW CHOPPER, ELECTRICALLY ADJUSTABLE- VARIOUS COMPONENTS

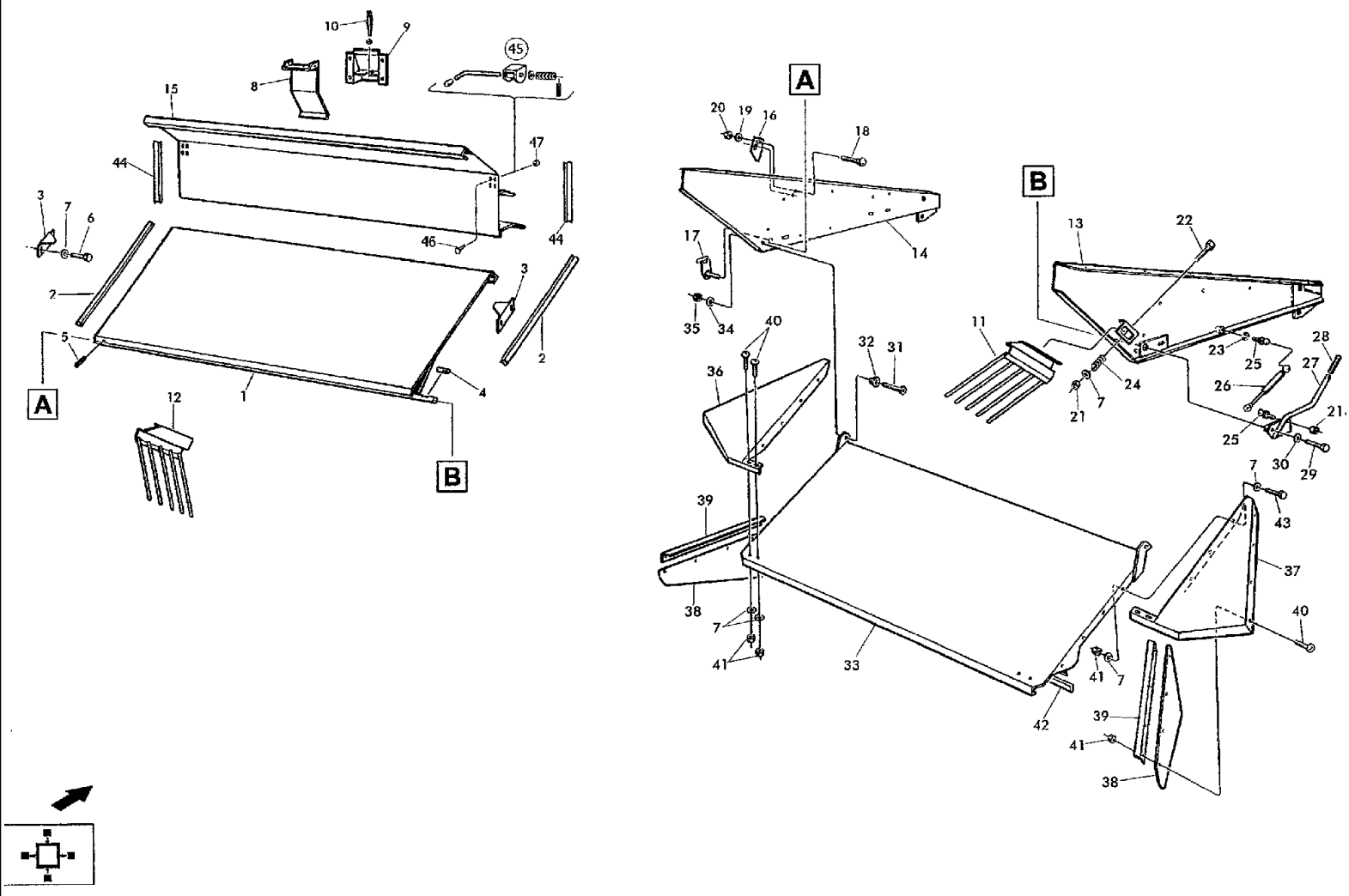

CF80 CASE IH CROSS FLOW COMBINE

J268(01) STRAW CHOPPER, ELECTRICALLY ADJUSTABLE- VARIOUS COMPONENTS

Ref	Part Number	Qty	Description
1	31330826	2	SHEET, Hood flap ж034-30.00.310 заслонка
2	31330834	4	STRIP, RUBBER, Rubber ledge
3	31330842	4	SUPPORT, Stop ж034-30.00.002 упор
4	03502384	2	KEY, BUCKET TOOTHRT, Flat key A8x7x30 DIN6885
5	838-5630	2	PIN, M6 x 30, Slotted, Roll pin 6x30 DIN1481 FST
6	614-8025	8	BOLT, Hex, M8 x 25, 8.8,
7	895-11008	52	WASHER, M8 x 16 x 1.6, Washer 8.4DIN125ST
8	31330850	2	PLATE, Pressure plate
9	03221414	2	HOLDER, Holding plate
10	31330875	2	SWITCH, Switch
11	03221416	2	RAKE, Swath rake r ж037-09.00.000 грабли валковые
12	03221417	2	RAKE, Swath rake l ж037-09.00.000-01 грабли валковые
13	31330906	2	SHEET, Side panel r ж034-30.00.110 боковина пр.
14	31330914	2	SHEET, Side panel l ж034-30.00.210 боковина лев.
15	03221418	2	SHEET, Cover plate ж034-30.00.610 щит
16	31330930	2	SHEET, Support ж034-30.00.002 упор
17	31330947	2	JACK PISTON, Bearing journal ж034-30.00.320 палец опорный
18	007751242	4	SCREW, Flat-round-head screw M6x16 DIN603 8.8
19	006509066	4	WASHER, Washer 7,4 DIN125 ST
20	832-10406	4	NUT, M6 x 1, Cl 8, Hex nut M6 DIN982 8
21	832-46408	6	NUT, LOCK, M8 x 1.25, Cl 8,
22	614-8080	4	BOLT, Hex, M8 x 80, 8.8, Full Thd, Hex bolt M8x80ISO40178.8
23	06455855	2	WASHER, LOCK, Spring washer A8 DIN 128 FST
24	770001780	4	SPRING, COMPRESSION, Pressure spring ис-300.102 пружина сжатия
25	770001932	4	BALL JOINT, Ball head

J268(02) STRAW CHOPPER, ELECTRICALLY ADJUSTABLE- VARIOUS COMPONENTS

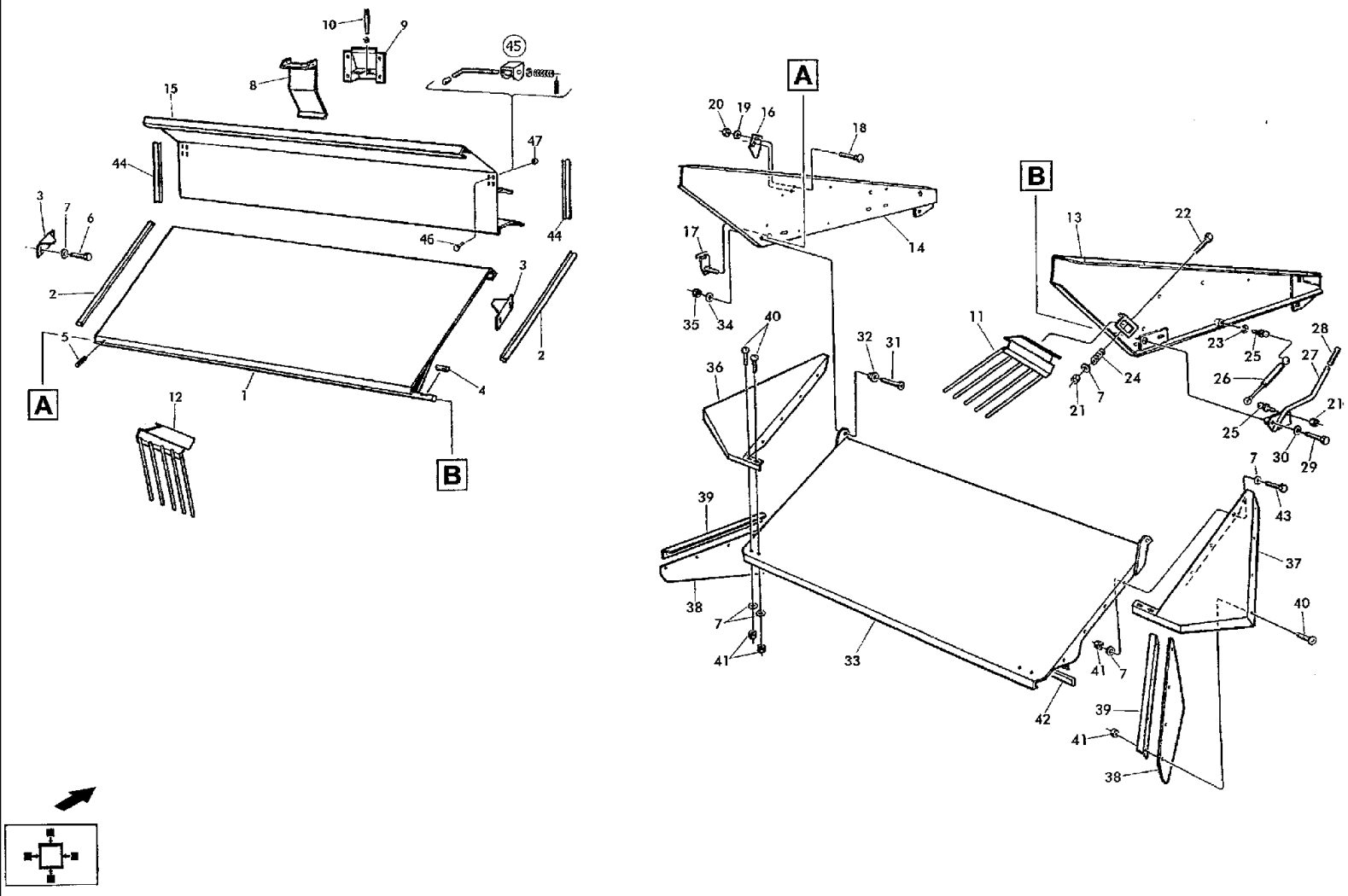

CF80 CASE IH CROSS FLOW COMBINE

J268(02) STRAW CHOPPER, ELECTRICALLY ADJUSTABLE- VARIOUS COMPONENTS

Ref	Part Number	Qty	Description
26	31330955	2	SPRING, Gas shock absorber
27	31330963	2	LEVER, Lever ж034-30.00.330 рукоятка
28	31330971	2	HANDLE, Handle
29	614-10030	2	BOLT, Hex, M10 x 30, 8.8,
30	06454901	2	WASHER, LOCK, Spring washer A10 DIN128 FST
31	06075450	4	SCREW, Countersunk screw M10X25DIN7991 8.8
32	31330988	4	RING, Sleeve ж034-30.00.001 втулка
33	31330996	2	PLATE, LARGE, Straw guide panel ж034-30.00.410 пластина
35	832-10410	4	NUT, LOCK, M10 x 1.5, Cl 8,
36	31331007	2	SHEET, Corner plate l ж034-30.00.430-01 накладка л.
37	31331015	2	SHEET, Corner plate r ж034-30.00.000 накладка пр.
38	31331023	4	CANVAS, Rubber cloth ж034-30.00.422 полотно резиновое
39	31331031	4	SLAT, Slat ж034-30.00.421 уголок
40	03291106	24	SCREW, Screw M8x16LKCS
41	06116155	40	NUT, Hex nut M8 DIN6925 8
42	31331048	2	SLAT, Rubber ledge
43	614-8020	16	BOLT, Hex, M8 x 20, 8.8, Hex bolt M8x20IS040178.8
44	03221419	4	SLAT, Rubber ledge
45	03221420	4	LEVER, Lever k
46	007751234	16	SCREW, Flat-round-head screw M6x20 DIN603 8.8
47	06116018	16	NUT, Hex nut M6 DIN6925 8
34	895-11010	4	WASHER, M10 x 20 x 2, Washer 10.5DIN125ST
45-1		2	ис-400.402 пружина
45-2		2	ж034-30.00.602 стержень
48		1	ж028-00.01.001 кронштейн
49		7	060519054 штуцер

J270(01) STRAW CHOPPER, ELECTRICALLY ADJUSTABLE- DRIVE

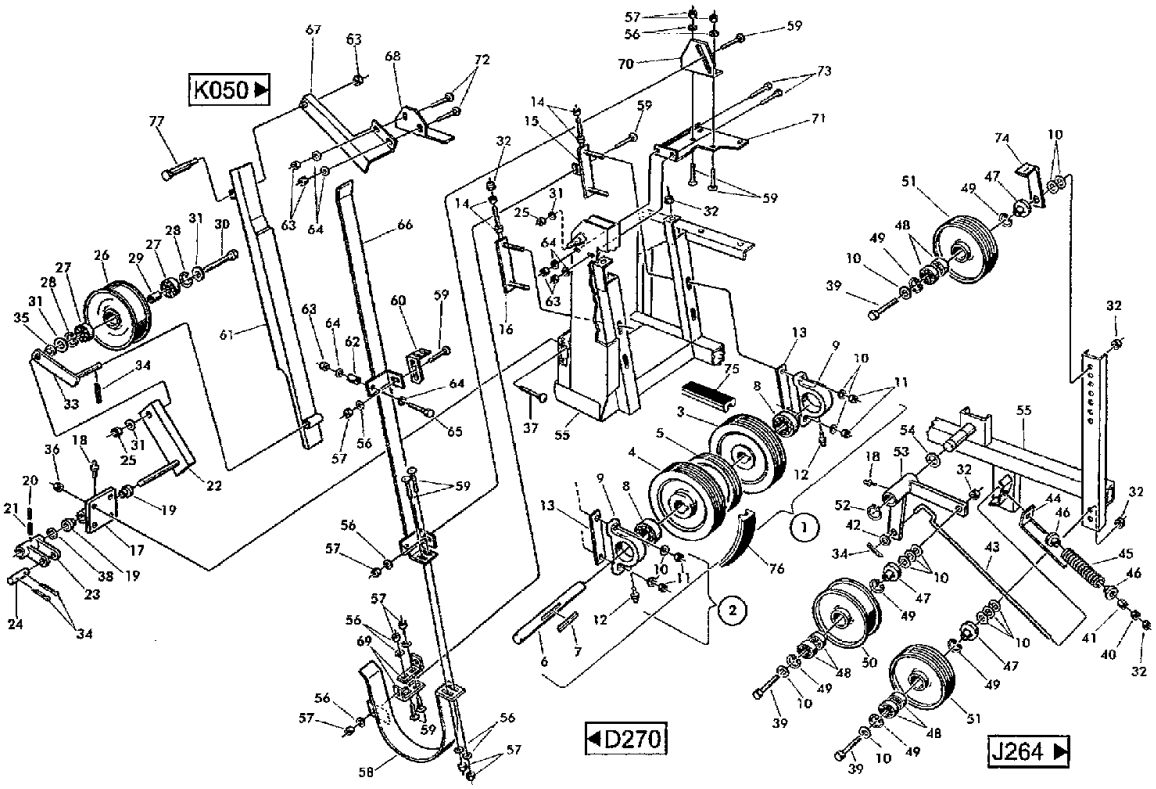

CF80 CASE IH CROSS FLOW COMBINE

J270(01) STRAW CHOPPER, ELECTRICALLY ADJUSTABLE- DRIVE

Ref	Part Number	Qty	Description
1	31330264	2	PULLEY, Transmission
2	770000714	4	CARRIER, BEARING, Pedestal bearing k
3	31330272	2	PULLEY, V-belt pulley ж033-30.00.003 шкив
4	31330280	2	PULLEY, V-belt pulley ж033-30.00.004 шкив
5	31330297	2	PULLEY, V-belt pulley
6	31330303	2	SHAFT, Countershaft ж033-30.00.005 шпонка
7	03502335	2	KEY, BUCKET TOOTHRT, Flat key A1 0x8x1 70 DIN6885
8	31331056	4	BEARING, Ball beaming GE40
9	31330352	4	HOUSING, BEARING, Bearing housing KRRB
10	770002162	32	WASHER, Washer сдв05.007 шайба
11	832-10412	28	NUT, LOCK, M12 x 1.75, Cl 8, Hex nut
12	03617160	4	NIPPLE, LUBE, Grease nippel M12DIN9828
13	31330416	4	BLOCK, Shim AR1/8ZOLL DIN71412 ж033-30.00.001 пластина
14	9804279	8	NUT, M12 x 1.75, Flg, Cl 8, Hex nut
15	31330311	2	SUPPORT, Clamp bridge M12DIN69238 ж033-30.20.000 тяга
16	31330328	2	SUPPORT, Clamp bridge a ж033-30.10.000 тяга
17	03221421	2	SUPPORT, Bearing i ж033-40.21.000 опора
18	03617056	4	NIPPLE, LUBE, Grease nippel k
19	31330344	4	BUSHING, Flanged bushing AM8x1 DIN71412 ж033-40.20.001 втулка
20	838-5545	2	PIN, M5 x 45, Slotted, Roll pin
21	838-5845	2	PIN, M8 x 45, Slotted, Roll pin 5x45 DIN1481 FST
22	31329920	2	SUPPORT, Tension roller retainer 8x45 DIN1481 FST ж033-40.30.000 рычаг
23	31330360	2	LEVER, Lever ж033-40.10.000 рычаг
24	31330377	2	SHAFT, Countershaft ж033-00.00.001 палец
25	832-10416	4	NUT, LOCK, M16 x 2, Cl 8, Hex nut M16DIN9828

J270(02) STRAW CHOPPER, ELECTRICALLY ADJUSTABLE- DRIVE

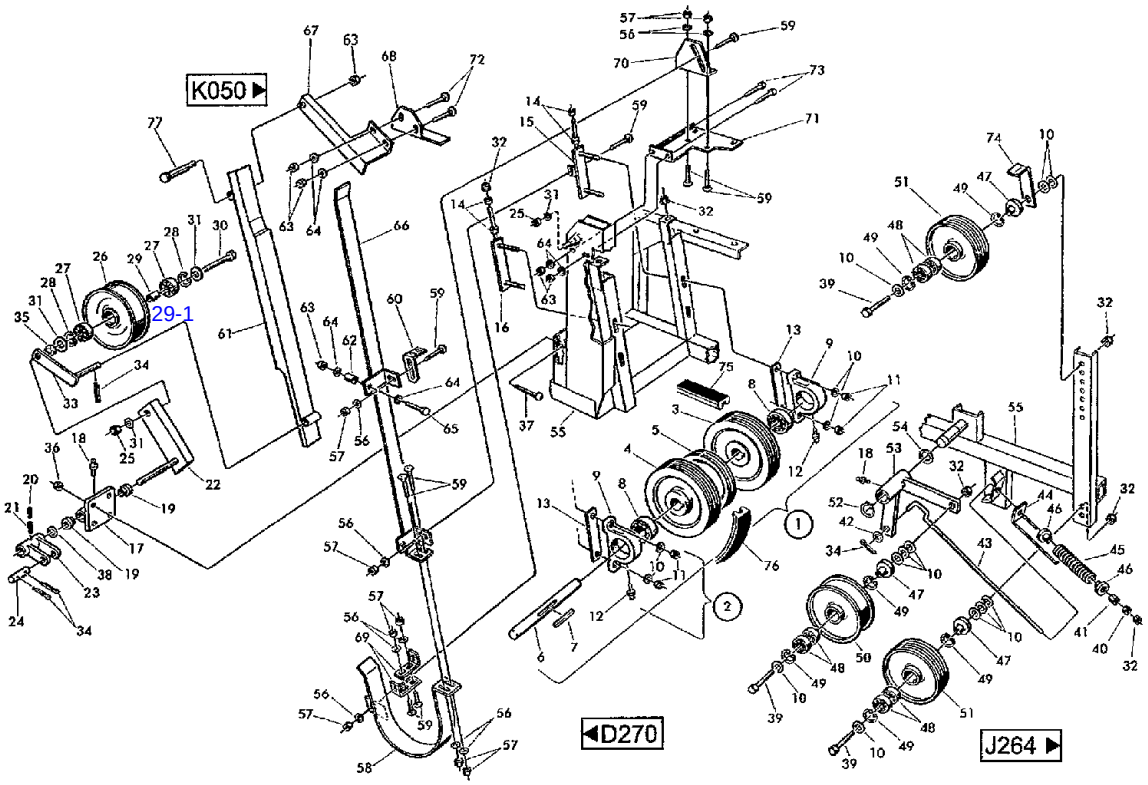

CF80 CASE IH CROSS FLOW COMBINE

J270(02) STRAW CHOPPER, ELECTRICALLY ADJUSTABLE- DRIVE

Ref	Part Number	Qty	Description
26	31330385	2	TIGHTENER SHEAVE, Idler ж033-40.40.001 ролик
27	03650844	4	BEARING, BALL, Grooved ball bearing 6303-2RS D1N625
28	770002170	4	CIRCLIP, Snap ring ж033-40.00.001 шайба
29	31330393	2	BUSHING, Sleeve ж033-40.40.002 втулка
30	814-16130	2	BOLT, Hex, M16 x 130, 8.8, Hex bolt M16x130ISO40148.8
31	895-11016	8	WASHER, M16 x 30 x 3, Washer 17DIN125ST 646232 шайба
32	832-10412	12	NUT, LOCK, M12 x 1.75, Cl 8, Hex nut M12 DIN982 8
33	31330424	2	SUPPORT, Belt retainer ж033-40.50.000 рычаг
34	06401520	8	PIN, SPLIT (COTTER), Splint pin 4x25 DIN94 ST
35	31330408	2	BUSHING, Sleeve ж033-40.00.002 втулка
36	832-10412	8	NUT, LOCK, M12 x 1.75, Cl 8, Hex nut M12 DIN982 8
37	614-12030	8	BOLT, Hex, M12 x 30, 8.8, Hex bolt M12x30 ISO4017 8.8
38	060507171	2	SHIM, Shim 30x42x0,3 DIN988 ж033-40.00.003 шайба
39	614-12080	6	BOLT, Hex, M12 x 80, 8.8, Full Thd, Hex bolt M12x80 ISO4017 8.8
40	825-1412	2	NUT, M12, Cl 8, Hex nut M12 ISO4032 8
41	770000626	2	NUT, Nut M 12x20
42	895-11012	2	WASHER, M12 x 24 x 2.5, Washer 13DIN125ST
43	31329898	2	THREADED ROD, Threaded rod ис-200.001 стержень с резьбойис
44	31330432	2	GUARD, Meas. panel ис-200.002 пластина
45	770000642	2	SPRING, COMPRESSION, Pressure spring ис-200.006 пружина
46	31330440	4	BUSHING, Sleeve ис-200.003 втулка
47	31330457	6	BUSHING, Sleeve ис-200.013 втулка
48	770000691	12	BEARING, BALL, Ball beaming 6204 2RS1
49	770002170	12	CIRCLIP, Snap ring
50	31330465	2	TIGHTENER SHEAVE, Idler ис-200.012 ролик
29-1		1	ж033-40.40.003 кольцо
47-1		1	ис-200.017 шайба распорная

J270(03) STRAW CHOPPER, ELECTRICALLY ADJUSTABLE- DRIVE

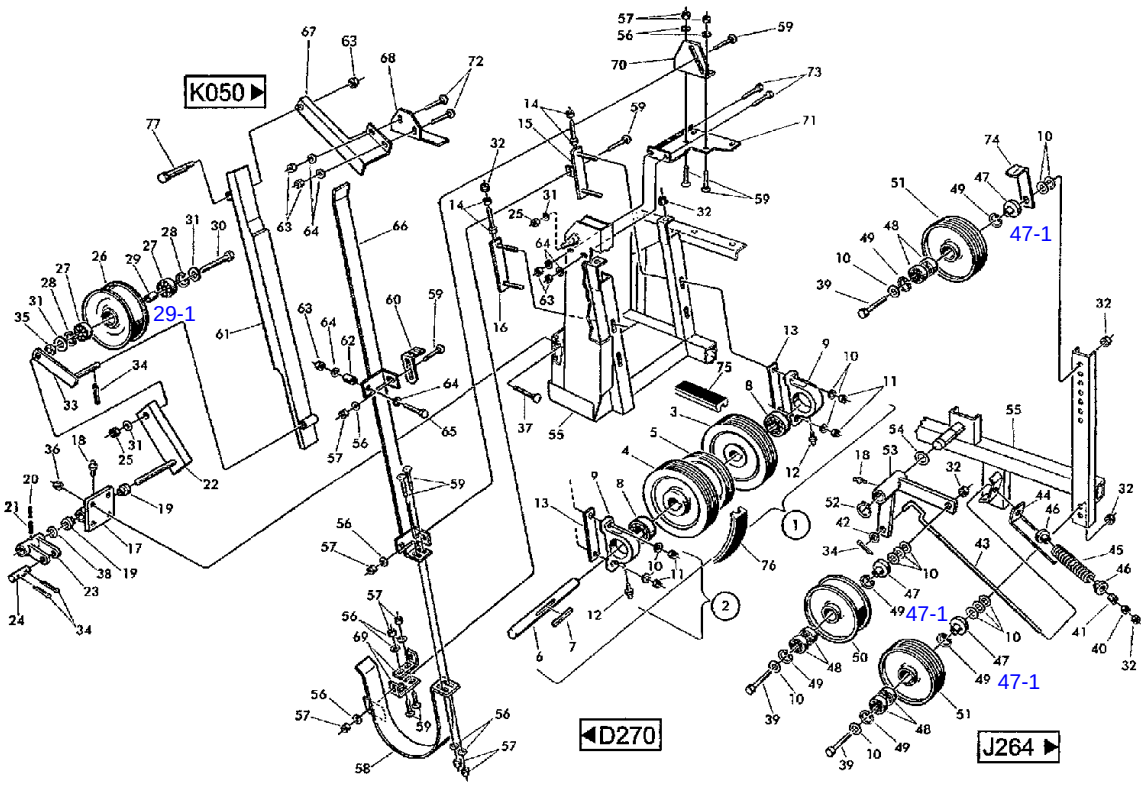

CF80 CASE IH CROSS FLOW COMBINE

J270(03) STRAW CHOPPER, ELECTRICALLY ADJUSTABLE- DRIVE

Ref	Part Number	Qty	Description
51	31330473	4	PULLEY, Guide roller ис-200.008 ролик направляющий
52	800-5140	2	RING, SNAP, M40, Ext, Hvy, Snap ring 40x2,5 DIN471 FST
53	31330481	2	SUPPORT, Tension roller retainer ж033-50.10.000 рычаг
54	06655163	2	SHIM, Shim 40x50x0,3 DIN988 ис-200.029 шайба
55	03221422	2	SUPPORT, Clamp console ж033-10.00.000 рама
56	06562062	22	WASHER, Washer 8,4 DIN7349 ST
57	06116155	20	NUT, Hex nut M8 DIN6925 8
58	31330504	2	GUIDE, Belt guide UNTEN ж033-20.20.000 направляющая
59	07753211	18	SCREW, Flat-round-head screw M8x25 DIN603 8.8
60	31330512	2	SUPPORT, Support
61	31330520	2	GUIDE, Belt guide VORN ж033-20.10.000 направляющая
62	31330537	2	SPACER, RING, Spacer tube
63	832-46410	12	NUT, LOCK, M10 x 1.5, Cl 8, Hex nut VM10 DIN980 8
64	21424095	12	WASHER, Washer 11x25x3-RST37-2 MDWN14510
65	614-10070	2	BOLT, Hex, M10 x 70, 8.8, Full Thd, Hex bolt M10x70ISO40178.8
66	31330545	2	GUIDE, Belt guide HINTEN ж033-20.30.000 направляющая
67	31330754	2	SUPPORT, Bearing ж033-20.40.000 кронштейн
68	31330553	2	SUPPORT, Support ж033-20.00.004 уголок
69	31330594	4	SUPPORT, Support ж033-20.00.002 уголок
70	31330600	2	SUPPORT, Support ж033-20.00.001 уголок
71	31330617	2	SUPPORT, Attaching plate ж033-00.00.002 кронштейн
72	711-10030	4	BOLT, CARRIAGE, Short NK, M10 x 30, Cl8.8, Full Thd, Flat-round-head screw M1 0x30 DIN603 8.8
73	614-10035	4	SCREW, Hex, M10 x 35, 8.8, Full Thd,
74	31330625	2	ANGLE, Bracket ж033-00.00.003 скоба
75	01114576	2	BELT, Composite v-belt 2HBx6745

J270(04) STRAW CHOPPER, ELECTRICALLY ADJUSTABLE- DRIVE

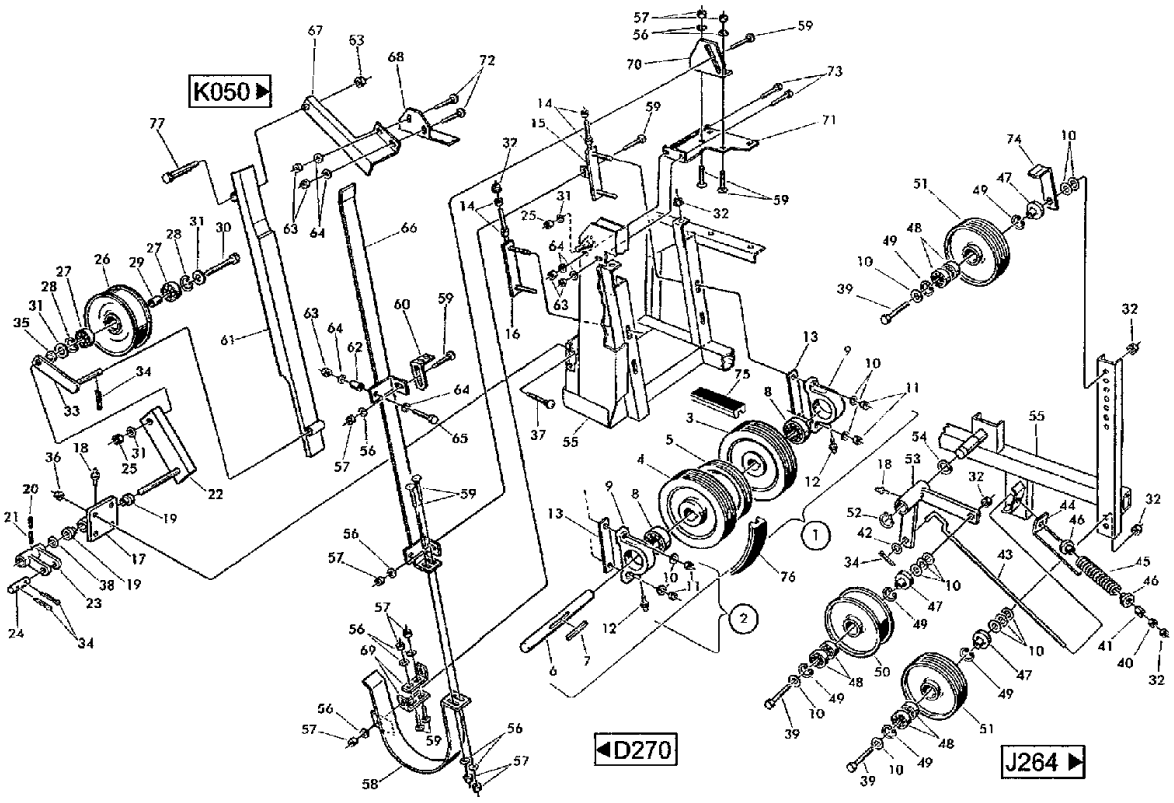

CF80 CASE IH CROSS FLOW COMBINE

J270(04) STRAW CHOPPER, ELECTRICALLY ADJUSTABLE- DRIVE

Ref	Part Number	Qty	Description
76	01114568	2	BELT, Composite v-belt 2HCx3270LA+/-8
77	03221424	2	PIN, LARGE, Bolt
78		1	ж033-00.00.004 кронштейн

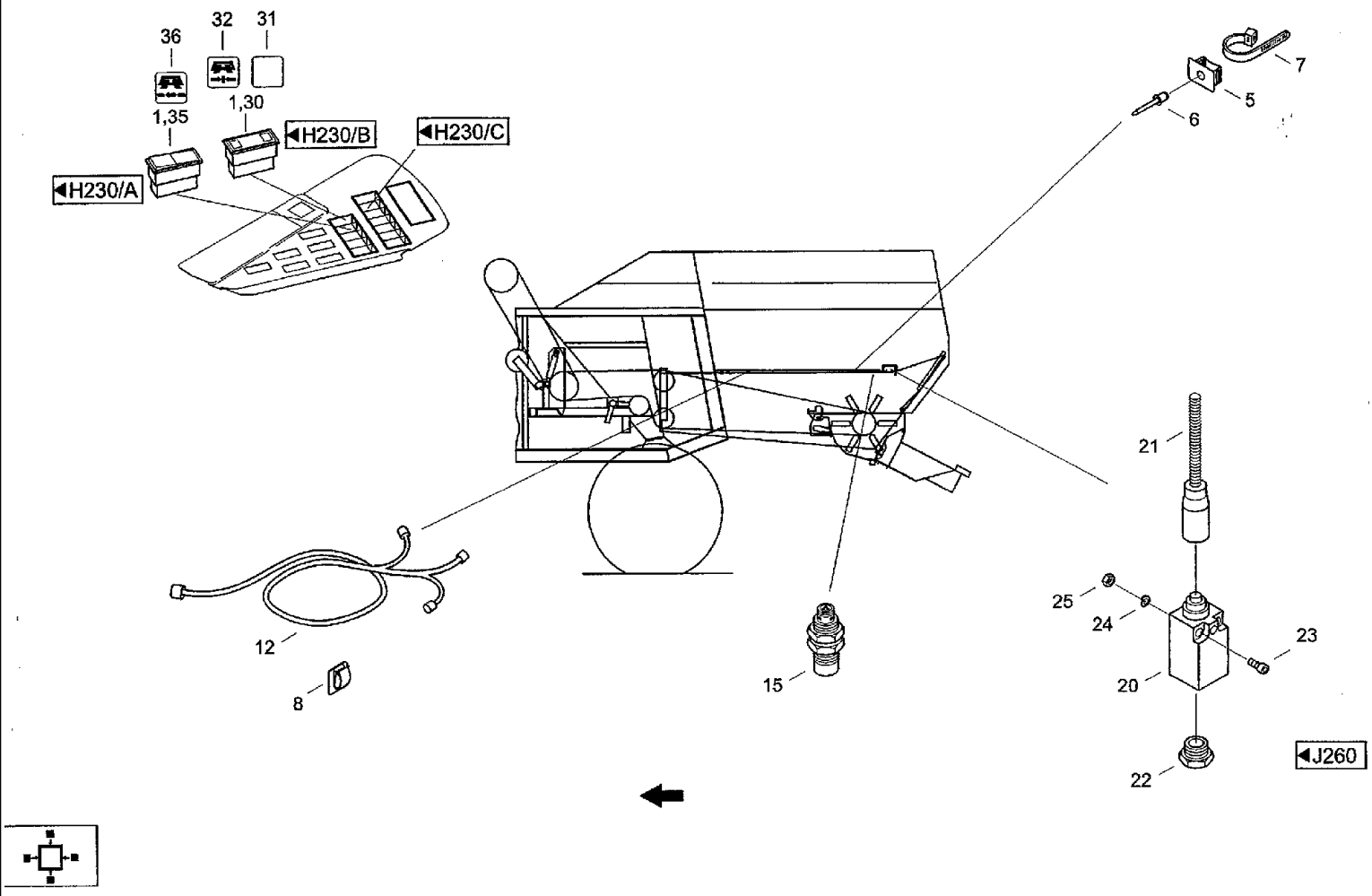
36
32
31
1,35
1,30
H230/A
H230/B
H230/C
7
5
6
21
25
24
23
20
22
J260
12
8
15

CF80 CASE IH CROSS FLOW COMBINE

J280 STRAW CHOPPER, ELECTRICALLY ADJUSTABLE- ELECTRICAL EQUIPMENT

Ref	Part Number	Qty	Description
1	07069363	2	SOCKET, Socket 24V M.FASSUNG
5	060532156	9	SUPPORT, Support
6	060522677	9	RIVET, Rivet A4x12-ST-A1P-ST-A1P DIN7337
7	07070043	9	CABLE, Cable band 250x4,8 TSL-250-S
8	007067064	1	CLAMP, Cable strap ACC38-A-20
12	07078653	1	HARNESS, Cable STROHHACKSLER
15	060533518	1	SENSOR, Sender NI8U-EM12-AN4X-H1 141/S372
20	060526576	1	SENSOR, Switch PS05S2011851476
21	060519046	1	LEVER, Lever VP7SI
22	060519054	1	SCREW, Screwing VP13
23	06006937	2	SCREW, Cheese-head screw M4x30 DIN84 4.8
24	06501268	2	WASHER, SPRING, Wave washer spring B4 DIN137 FST
25	006267136	2	NUT, Hex nut M4 DIN985 8
30	060157816	1	BULB, Indicator light 24V 2-FACH
31	060512691	1	SWITCH, Switch insert
32	061021288	1	SYMBOLS, Symbol
35	060157728	1	SWITCH, Toggle switch
36	060506250	1	CLUSTER, INSTRUMENT, Switch insert

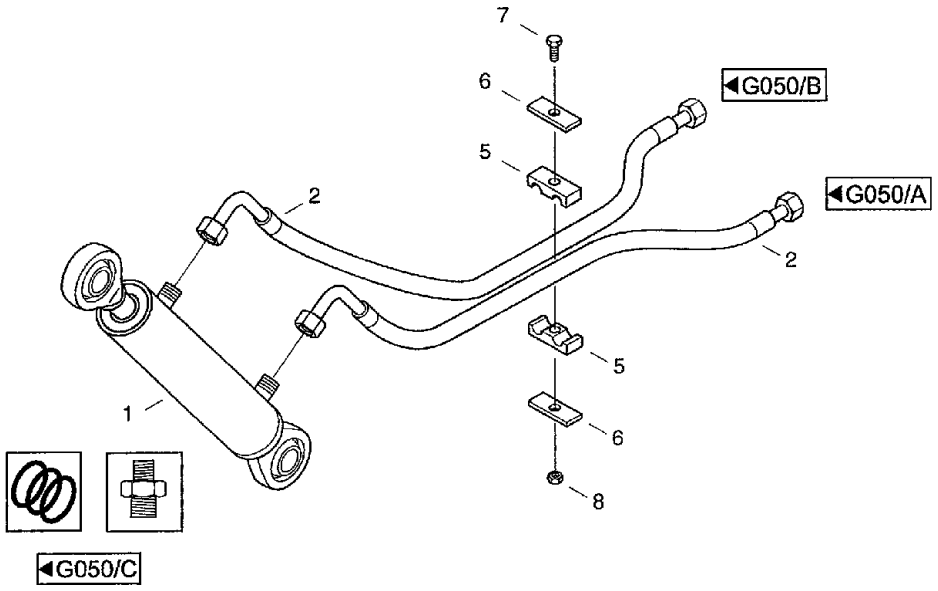

◀J260

CF80 CASE IH CROSS FLOW COMBINE

J290 STRAW CHOPPER, ELECTRICALLY ADJUSTABLE- HYDRAULICS

Ref	Part Number	Qty	Description
1	03129347	2	CYLINDER ASSY., Cylinder 40/30x125089155.0
2	060521602	4	HOSE, Hose line PHD1 06x11 OOAOLAOL45
5	060505731	4	CLAMP, Duoble attaching clip LNG3 13,5/13,5 PP
6	060505387	8	COVER, Cover plate DPL3
7	614-6035	4	BOLT, Hex, M6 x 35, 8.8, Full Thd, Bolt, Hex, M6 x 35, 8.8, Full Thd, ISO4017
8	825-1406	4	NUT, M6, Cl 8,

J302(01) STRAW CHOPPER, MECHANICALLY ADJUSTABLE- DISTRIBUTING BOX

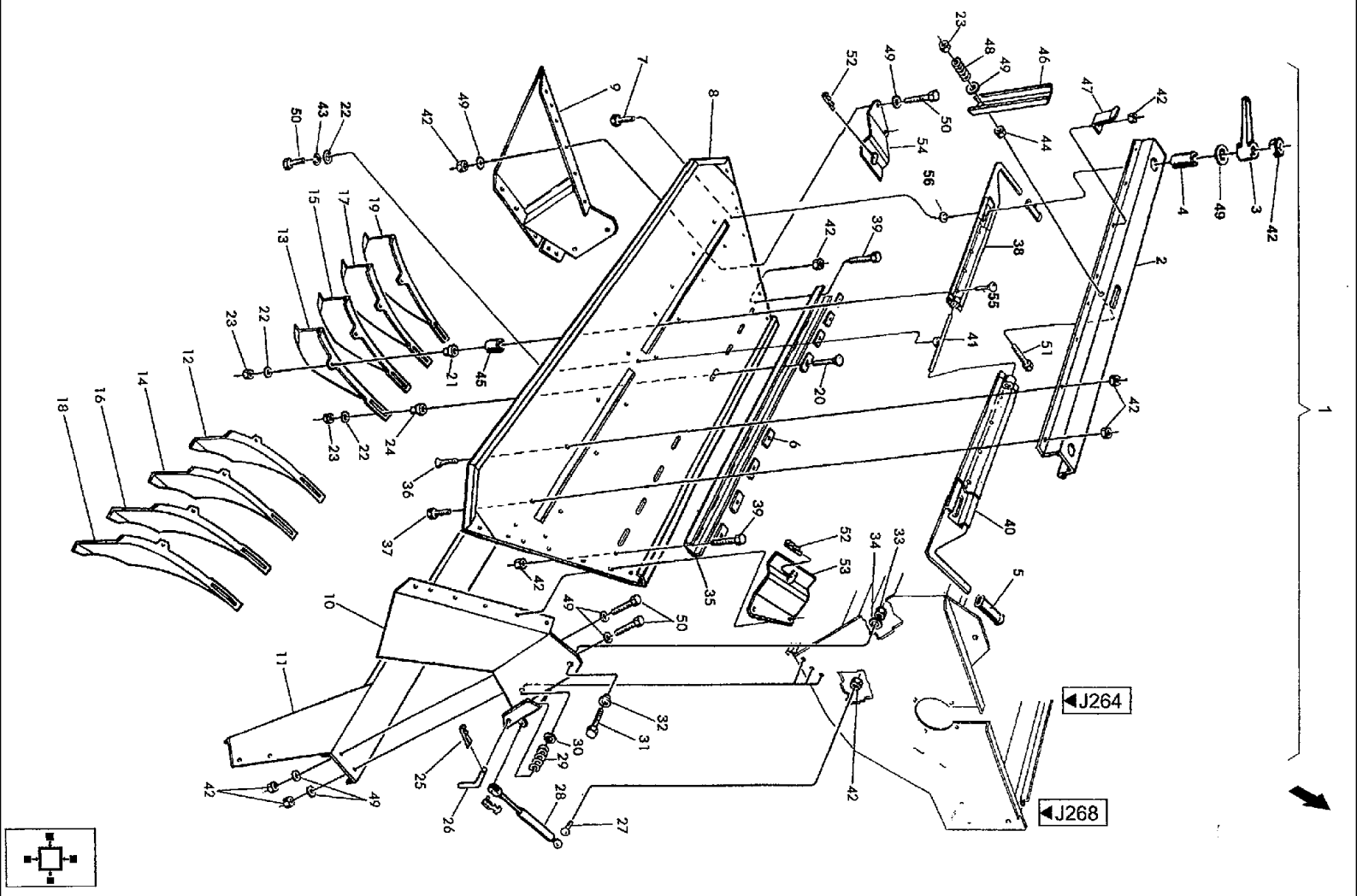

CF80 CASE IH CROSS FLOW COMBINE

J302(01) STRAW CHOPPER, MECHANICALLY ADJUSTABLE- DISTRIBUTING BOX

Ref	Part Number		Qty	Description	
1	03221425		1	FRAME ASSY, Distributing box k	
2	31330674		1	BAR, Rail	ж037-07.00.002 шина
3	31330682		2	HANDLE, Conical handle	ис-500:000 рукоятка
4	31330690		2	SPACER, Spacer tube	ис-500:003 трубка распорная
5	31329840		2	HANDLE, Handle	
6	31329986		8	RAIL, Cover rail	ис-500:007 втулка распорная
7	07754003		2	SCREW, Flat-round-head screw M8x90 DIN603 8	
8	31330705		1	SHEET, Upper part	ж037-11.00.000 крышка
9	31330014		1	PROTECTION PLATE, Side panel l	ж037-01.00.000-01 боковина
10	31330022		1	PROTECTION PLATE, Side panel r	ж037-01.00.000 боковина
11	31330030		1	BAR, Bottom	ж037-08.00.000 перемычка
12	31330047		1	FIN, Scatter vane r, Nr.1	ж037-04.00.000 крыльчатка
13	31330055		1	FIN, Scatter vane l, Nr.1	ж037-04,00,000-01 крыльчатка
14	31330063		1	FIN, Scatter vane r, Nr.2	ж037-05.00.000 крыльчатка
15	31330071		1	FIN, Scatter vane l, Nr.2	ж037-05.00.000-01 крыльчатка
16	31330088		1	FIN, Scatter vane r, Nr.3	ж037-06.00.000 крыльчатка
17	31330096		1	FIN, Scatter vane l, Nr.3	ж037-06.00.000-01 крыльчатка
18	31330102		1	FIN, Scatter vane r, Nr.4	ж037-07.00.000 крыльчатка
19	31330110		1	FIN, Scatter vane l, Nr.4	ж037-07.00.000-01 крылбчатка
20	07753211		8	SCREW, Flat-round-head screw M8x25 DIN603 8.8	
21	31330127		8	SPACER, RING, Spacer ring	
22	06502638		17	WASHER, Washer R9DIN440100HV	
23	06116155		17	NUT, Hex nut M8 DIN6925 8	
24	31330135	16	8	RING, Spacer ring	ис-400:101 втулка
25	03291083		2	SPLIT PIN/SAFETY PIN, Spring clip 2,5x10x45	

J302(02) STRAW CHOPPER, MECHANICALLY ADJUSTABLE- DISTRIBUTING BOX

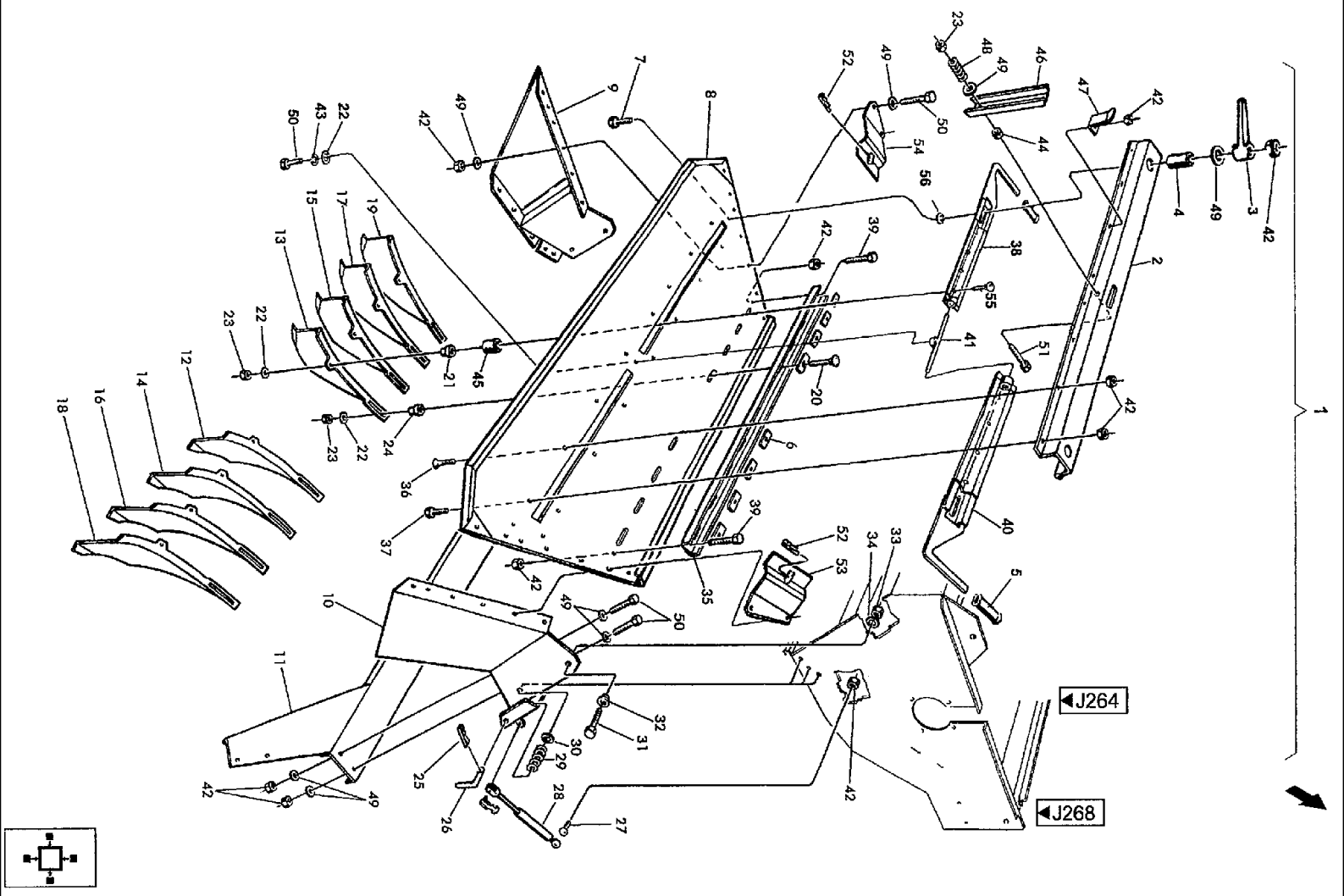

CF80 CASE IH CROSS FLOW COMBINE

J302(02) STRAW CHOPPER, MECHANICALLY ADJUSTABLE- DISTRIBUTING BOX

Ref	Part Number		Qty	Description
26	31330143		2	LEVER, Lever ис-500:011 рычаг
27	770001932		2	BALL JOINT, Ball head
28	31330151		2	CYLINDER ASSY., Gas shock absorber
29	31330168		2	COMPRESSION SPRING, Pressure spring ис-500:010 пружина
30	006509371		2	WASHER, Washer 14DIN126
31	614-12040		2	BOLT, Hex, M12 x 40, 8.8, Full Thd,
32	31330176		2	SPACER, Sleeve
33	832-46412		2	NUT, LOCK, M12 x 1.75, Cl 8, Hex nut 12 DIN980 8
34	770002162		2	WASHER, Washer сдв 05.007 шайба
35	31330184		1	SLAT, Rail ж037-00.00.001 шина
36	97010294		10	SCREW, Countersunk screw M8x16 DIN7991 8.8
37	614-8016		5	BOLT, Hex, M8 x 16, 8.8,
38	31330713		1	SLIDER, Spool l ж037-03.00.000 задвижка
39	614-8016		2	BOLT, Hex, M8 x 16, 8.8,
40	31330721		1	SLIDER, Spool r ж037-02.00.000-01 задвижка
41	31330738		1	SUPPORT, Support ж037-02.00.000 держатель
42	832-46408		44	NUT, LOCK, M8 x 1.25, Cl 8,
43	06455855		1	WASHER, LOCK, Spring washer A8DIN128FST
44	825-1408		1	NUT, M8, Cl 8,
45	31330746		8	SPACER, Spacer ring
46	31330223		1	SUPPORT, Support
47	31330231		1	SUPPORT, Support
48	31330168		1	COMPRESSION SPRING, Pressure spring
49	06562062	65	48	WASHER, Washer 8,4 DIN7349 ST 646492 шайба
50	614-8025		24	BOLT, Hex, M8 x 25, 8.8,

J302(03) STRAW CHOPPER, MECHANICALLY ADJUSTABLE- DISTRIBUTING BOX

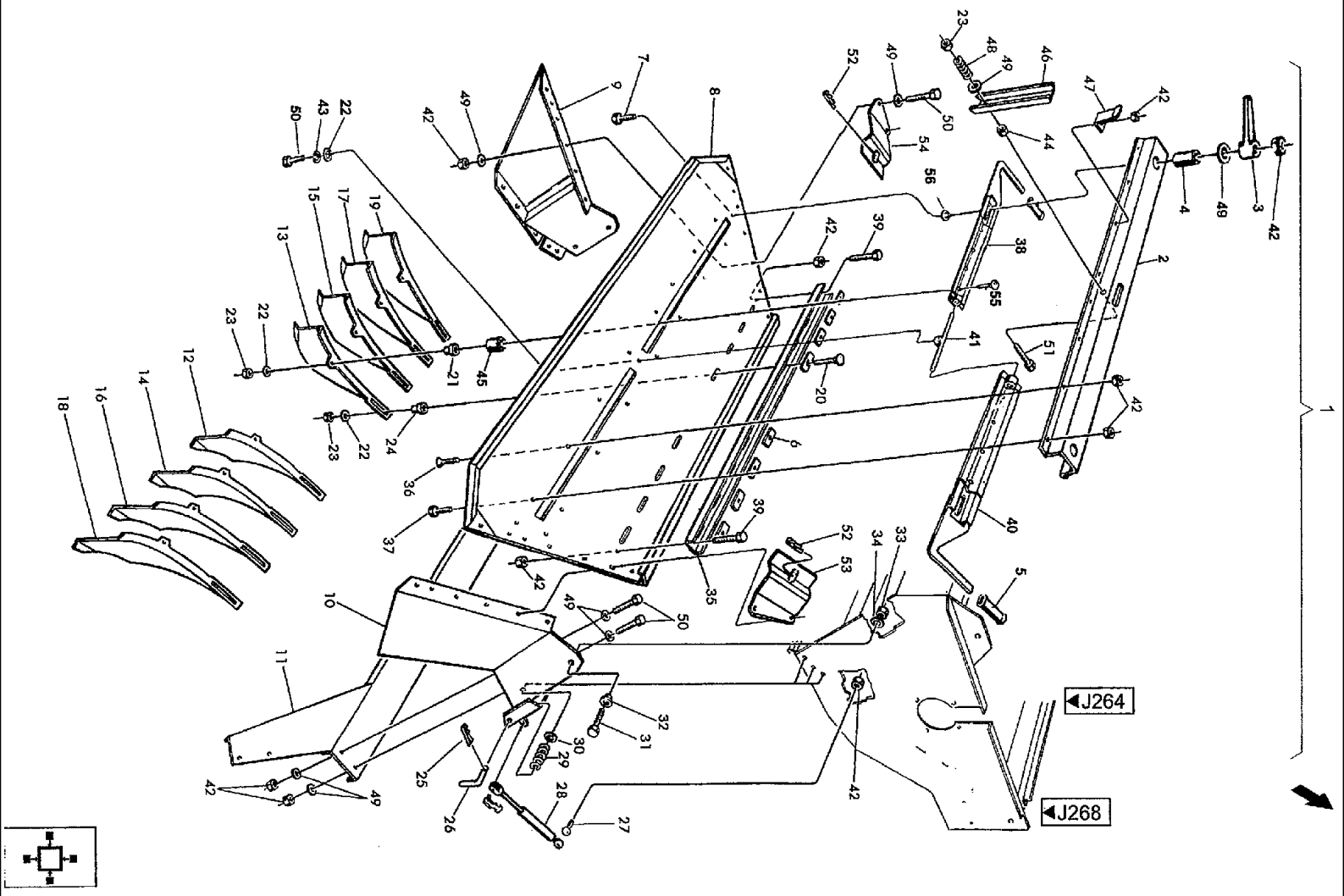

CF80 CASE IH CROSS FLOW COMBINE

J302(03) STRAW CHOPPER, MECHANICALLY ADJUSTABLE- DISTRIBUTING BOX

Ref	Part Number	Qty	Description
51	614-8050	1	BOLT, Hex, M8 x 50, 8.8, Full Thd, Hex bolt M8x50ISO40178.8
52	03291091	2	SPLIT PIN/SAFETY PIN, Splint pin 3,5x17x67
53	03221411	1	SUPPORT, Support r, SCHWADRECHEN
54	03221412	1	SUPPORT, Support I, SCHWADRECHEN
55	07753228	8	SCREW, Flat-round-head screw M8x30 DIN603 8.8
56	31331312	2	SPACER, RING, Spacer ring ис-500:004 кольцо распорное

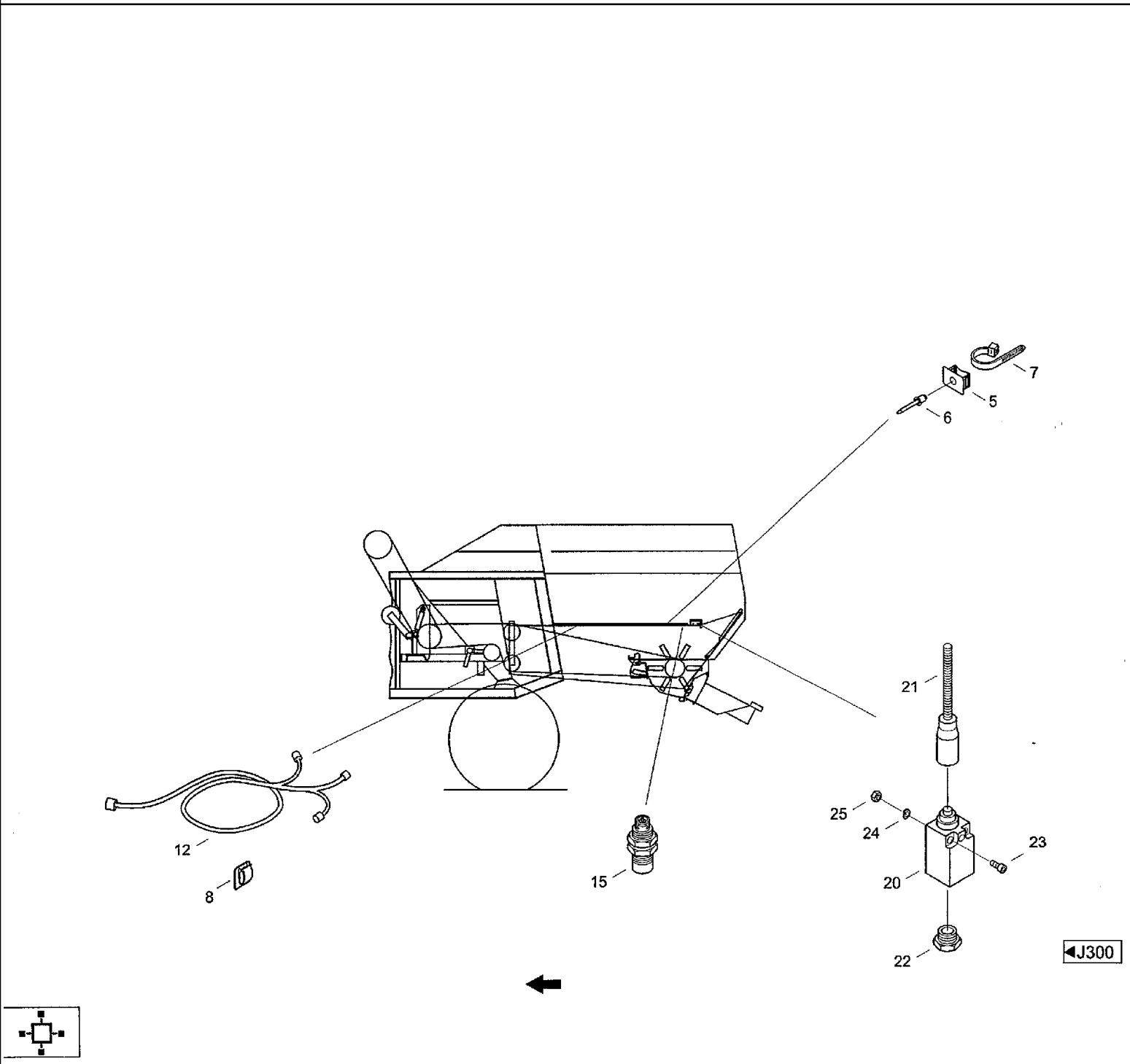
7
5
6
21
25
24
23
20
22
12
8
15
◄J300

CF80 CASE IH CROSS FLOW COMBINE

J320 STRAW CHOPPER, MECHANICALLY ADJUSTABLE- ELECTRICAL EQUIPMENT

Ref	Part Number	Qty	Description
5	060532156	4	SUPPORT, Support
6	060522677	4	RIVET, Rivet A4x12-ST-A1P-ST-A1P DIN7337
7	07070043	4	CABLE, Cable band 250x4,8 TSL-250-S
8	007067064	1	CLAMP, Cable strap ACC38-A-20
12	07078653	1	HARNESS, Cable STROHHACKSLER
15	060533518	1	SENSOR, Sender NI8U-EM12-AN4X-H1 141/S372
20	060526576	1	SENSOR, Switch PS05S2011851476
21	060519046	1	LEVER, Lever VP7SI
22	060519054	1	SCREW, Screwing VP13
23	06006937	2	SCREW, Cheese-head screw M4x30 DIN84 4.8
24	06501268	2	WASHER, SPRING, Wave washer spring B4DIN137FST
25	006267136	2	NUT, Hex nut M4 DIN985 8

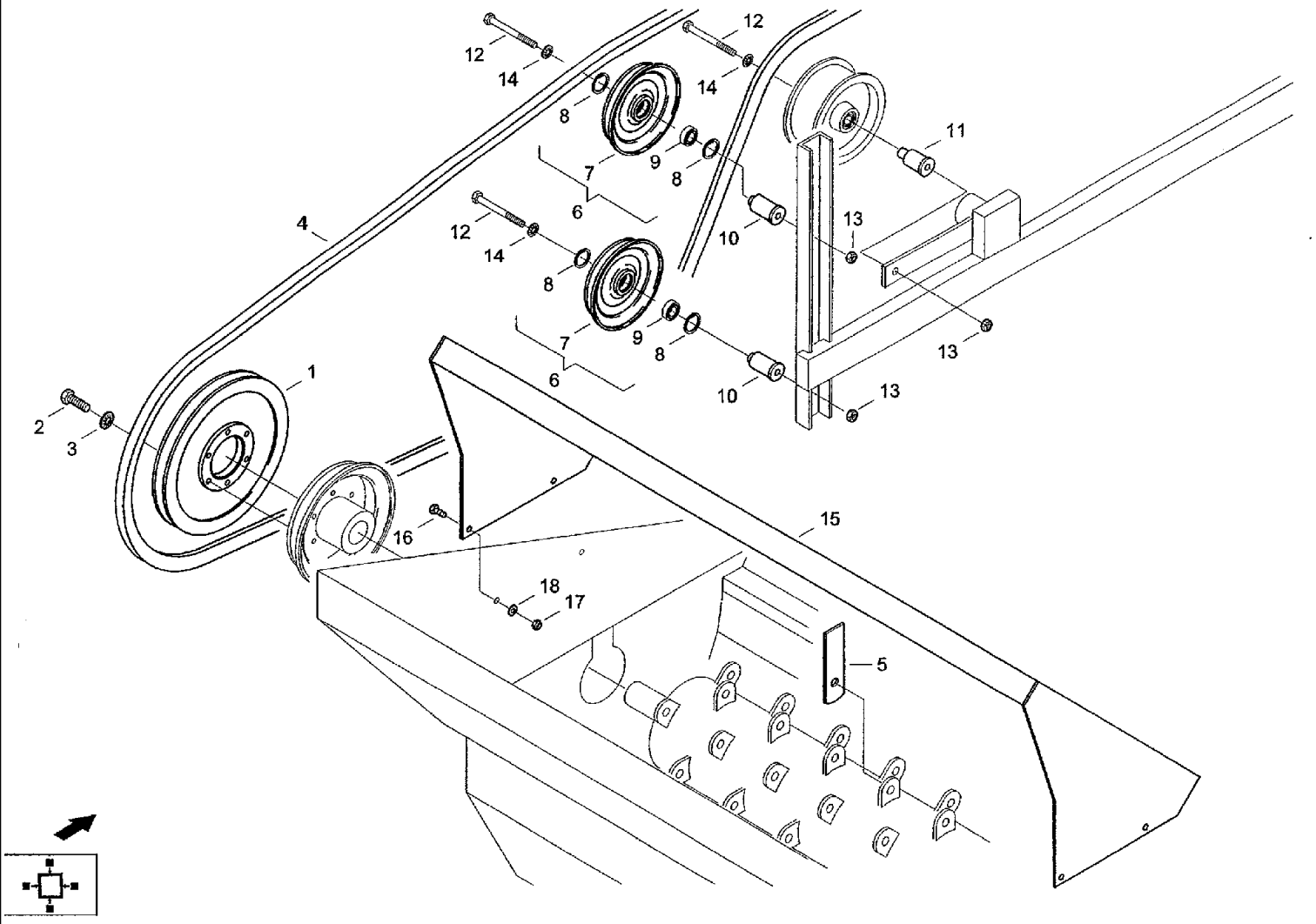
12
14
8
7
6
9
10
11
13
4
1
2
3
16
15
18
17
5

CF80 CASE IH CROSS FLOW COMBINE

J350 STRAW CHOPPER- MAIZE, EQUIPMENT

Ref	Part Number	Qty	Description
1	31348997	1	PULLEY, V-belt pulley
2	614-10030	6	BOLT, Hex, M10 x 30, 8.8,
3	06577003	6	WASHER, SPECIAL, Locking washer M10
4	31349008	1	BELT, V-belt
5	060532252	44	KNIFE, Flail for corn
6	31349024	2	BEARING, ROLLER, Guiding pulley
7	31349032	1	BEARING, ROLLER, Roller
8	770002170	2	CIRCLIP, Snap ring
9	770000691	1	BEARING, BALL, Ball beaming 6204 2RS1
10	31349040	2	NUT, SPECIAL, Sleeve
11	31349057	1	NUT, SPECIAL, Sleeve
12	06303406	3	SCREW, Hex bolt M12/120ISO40178.8
13	825-1412	3	NUT, M12, Cl 8, Hex nut M12 IS04032 8
14	06577060	7	WASHER, Locking washer B12
15	31349065	1	PROTECTION PLATE, Guard plate MAIS
16	614-10030	4	BOLT, Hex, M10 x 30, 8.8,
17	832-46410	4	NUT, LOCK, M10 x 1.5, Cl 8, Hex nut VM10DIN9808
18	895-11010	8	WASHER, M10 x 20 x 2, Washer 10.5DIN125ST

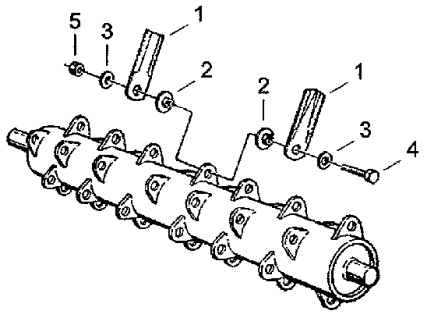

◀J264

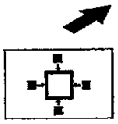

CF80 CASE IH CROSS FLOW COMBINE

J355 STRAW CHOPPER- KNIFE, STRENGTHENED

Ref	Part Number	Qty	Description
1	31344807	88	KNIFE, Knife 5mm GEZAHNT
2	31344815	88	BUSHING, Sleeve
3	31344823	88	WASHER, Spacer washer
4	31344831	44	SCREW, Screw M10x5510.9
5	770000634	44	NUT, Nut M10

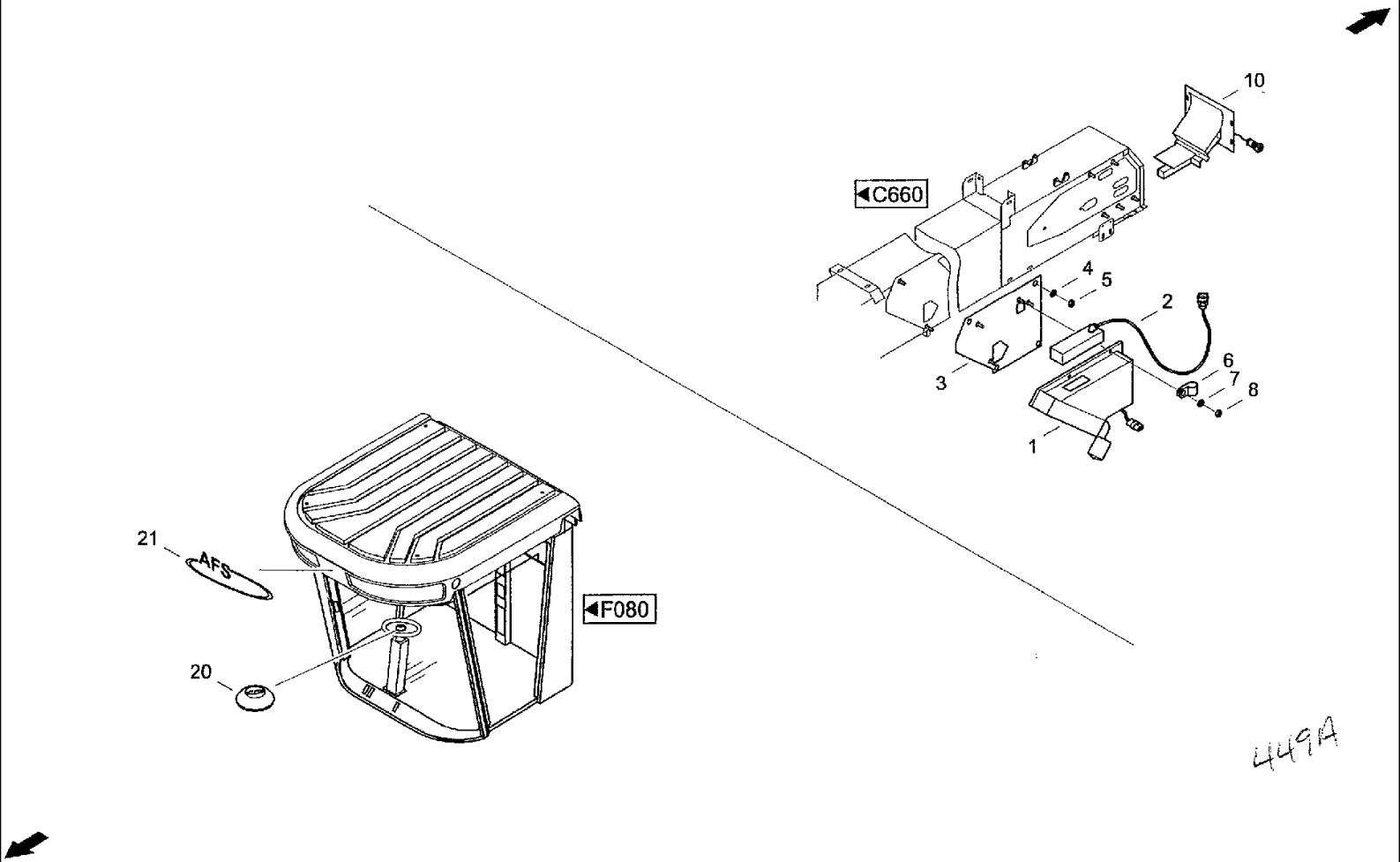

449A

CF80 CASE IH CROSS FLOW COMBINE

J360 GRAIN YIELD METERING- NOT GPS [CF80K]

Ref	Part Number	Qty	Description
553	31357434N1	1	COMPUTER CARD, Memory card

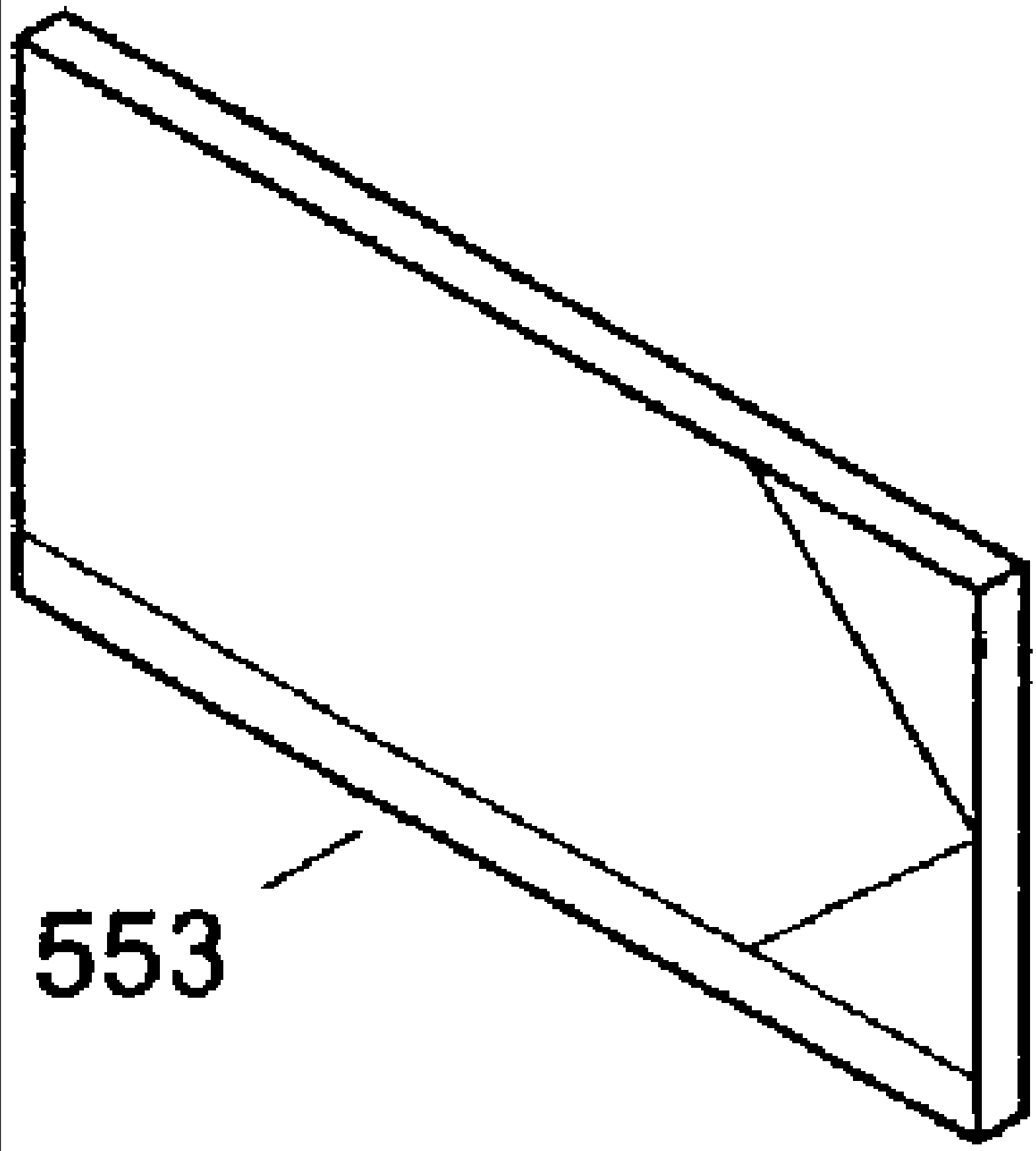
553

CF80 CASE IH CROSS FLOW COMBINE

J363 GRAIN YIELD METERING- WITH GPS [CF80K]

Ref	Part Number	Qty	Description
110	614-8020	25	BOLT, Hex, M8 x 20, 8.8, Hex bolt M8x20ISO40178.8
111	614-8035	1	BOLT, Hex, M8 x 35, 8.8, Hex bolt M8x35 ISO4017 8.8
115	895-25008	26	WASHER, M8 x 20 x 1.6, Washer 8,4 DIN9021 140HV
116	06501380	26	WASHER, CUP, Wave washer spring B8DIN137FST
120	825-1408	8	NUT, M8, Cl 8,
125	614-10025	2	BOLT, Hex, M10 x 25, 8.8, Full Thd, Hex bolt M10x25ISO40178.8
127	825-1410	2	NUT, M10, Cl 8,
129	06577003	2	WASHER, SPECIAL, Locking washer M10
132	060506845	1	CLAMP, Pipe clip LH-NR. 12-801 -856 RSGU1.12/15W1
135	614-12030	1	BOLT, Hex, M12 x 30, 8.8, Hex bolt M12x30ISO40178.8
136	825-1412	1	NUT, M12, Cl 8, Hex nut M12 IS04032 8
137	06577060	2	WASHER, Locking washer B12
141	31347738	1	STRIP, SEALING, Sealing strip
150	31343027	1	BRACKET, Panel
160	31331827	1	PROTECTOR, Guard
131	895-11010	2	WASHER, M10 x 20 x 2, Washer 10,5 DIN125 ST

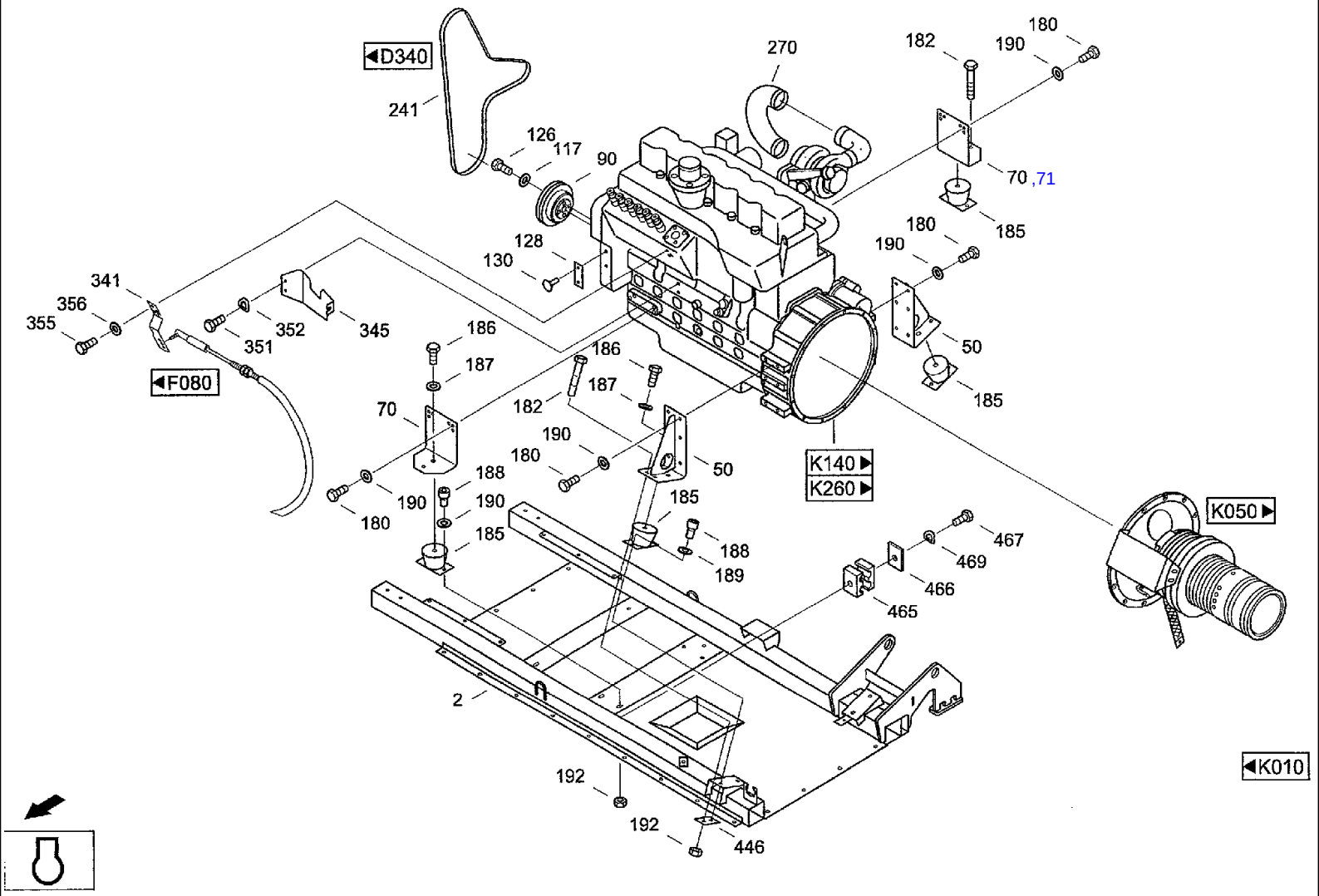
◀D340
241
126
117
90
270
182
190
180
70 ,71
185
128
130
180
190
50
185
341
356
355
352
345
351
186
187
◀F080
70
186
187
182
190
180
188
190
190
180
185
50
K140 ▶
K260 ▶
K050 ▶
185
188
189
467
469
466
465
2
192
192
446
◀K010

CF80 CASE IH CROSS FLOW COMBINE

J369 GRAIN YIELD METERING- ACCESSORY COMPONENTS [CF80K]

Ref	Part Number	Qty	Description
2	061074941	1	SUPPORT, Motor bracket к002-01.00.000 рама
50	061077911	2	HOLDER, Engine mounting l 528-50201:050/03 крепление двигателя
70	061077944	2	HOLDER, Engine mounting r к002-00.00.070 опра задняя
90	061077952	1	PULLEY, V-belt pulley к002-00.00.090 шкив
108	060503184	4	CLAMP, Hose clip AS70-90-W2-1 DIN3017
109	003785021	1	CLAMP, Hose clip AL50-70-W2-1 DIN3017
110	061065893	1	HOSE, LARGE, Return pipe
111	072007865	1	ELBOW, Manifold
112	02858265	1	HOSE, LARGE, Suction line
115	31300572	1	SUPPORT, Support
117	895-11014	4	WASHER, M14 x 28 x 2.5, Washer 15DIN125ST
118	006700692	1	SPRING, TENSION, Tension spring A3,2x22x25AA1
119	31287557	1	THREADED ROD, Capstan к002-00.00.119 шпилька
120	31287565	1	ANGLE, Holding angle
125	814-10110	2	BOLT, Hex, M10 x 110, 8.8, Hex bolt M10x110IS040148.8
126	060534094	4	SCREW, Hex bolt M14x1, 5x60 DIN960 12.9
127	614-10020	6	BOLT, Hex, M10 x 20, 8.8, Full Thd,
128	31307417	1	DECAL, Plate homolog.
130	301-1413	2	SCREW, Drive, #2 x 3/16", Notched pin 3/16ZOLLAHNL. KERBNAG.2.5X5
133	06577003	14	WASHER, SPECIAL, Locking washer M10
134	825-1410	10	NUT, M10, CI 8,
135	060503192	1	ALTERNATOR, Alternator 07 28V 10
136	31302027	1	PULLEY, V-belt pulley
137	003791278	2	VENTILATOR, Fan
138	060503215	2	SPRING, Woodruff key
71		1	к002-00.00.071 опора передняя

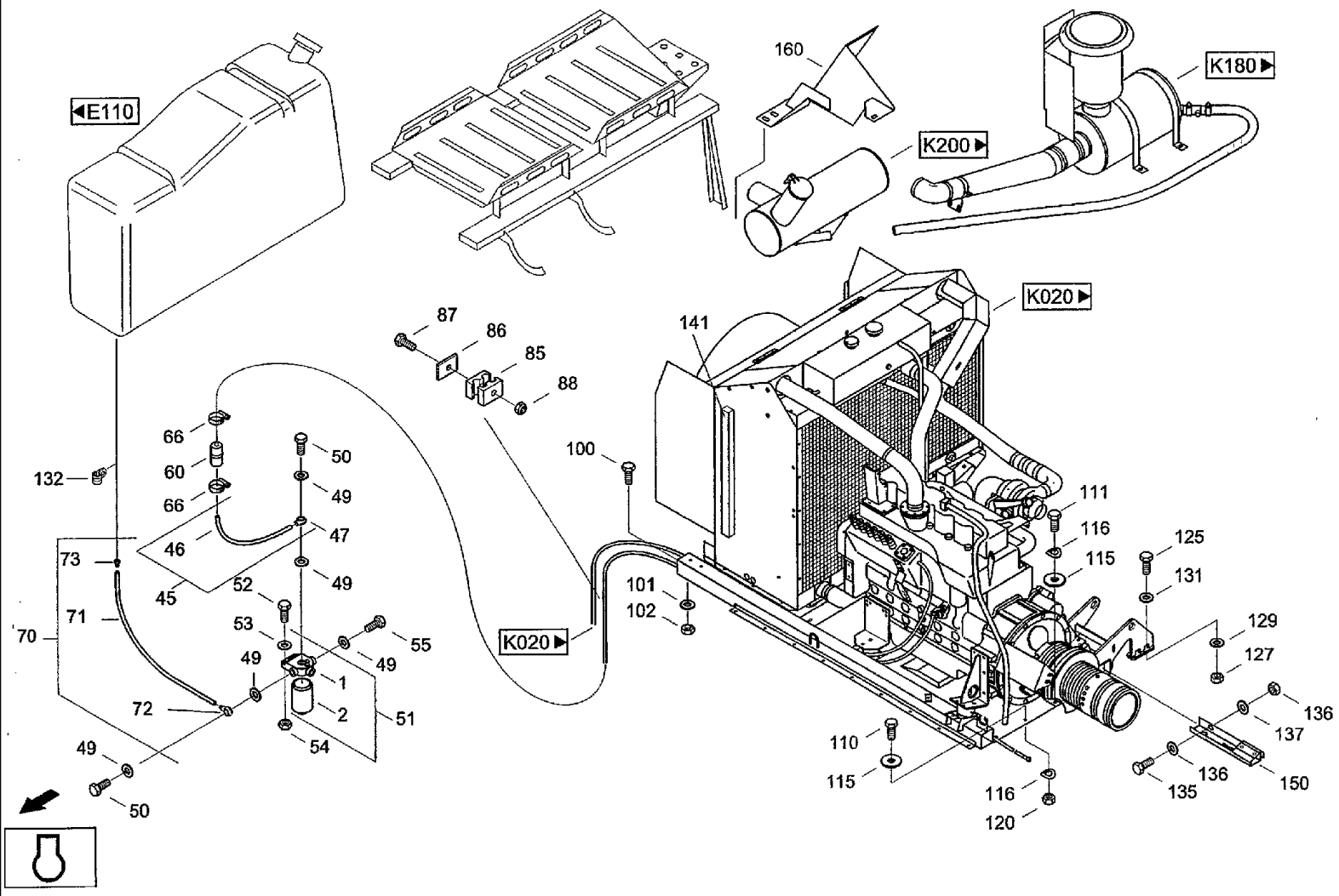
E110
160
K200
K180
K020
87
86
85
88
141
66
60
66
132
50
49
47
46
73
45
52
49
71
70
53
55
49
49
1
72
2
51
54
49
50
100
101
102
K020
111
116
115
125
131
129
127
136
137
136
135
150
110
115
116
120

CF80 CASE IH CROSS FLOW COMBINE

K010(01) ENGINE- VARIOUS COMPONENTS

Ref	Part Number	Qty	Description
1	060533198	1	COVER, Header DGM/K70-K
2	060533204	1	FILTER CARTRIDGE, Replacement filter DGM/K70
45	060206914	1	HOSE, Fuel line
46	060206922	1	PIPE, Tube
47	060516340	1	BOLT, BANJO, Ring segment R14-8
49	04101407	5	GASKET, Seal A14x18DIN7603CU
50	06106811	2	JACK SCREW, Hollow screw 10(M14x1,5)DIN7643
51	060210638	1	TRAP, WATER, DK prefilter DGM/K 70 KOMPLETT
52	614-10035	2	SCREW, Hex, M10 x 35, 8.8, Full Thd,
53	06577003	4	WASHER, SPECIAL, Locking washer M10
54	825-1410	2	NUT, M10, Cl 8,
55	06103263	1	VANEUM GAUGE, Locking screw
60	060503280	1	PUMP, Fuel pump 24VDC
66	006610963	2	CLAMP, Hose clip AL8-12-W2-1 DIN3017
70	072018771	1	HOSE, Fuel line
71	072018788	1	PIPE, Tube
72	060516340	1	BOLT, BANJO, Ring segment R14-8
73	060516357	1	CONNECTOR, HYD., Connection D1 6x1, 5-8
85	060516486	1	CLAMP, Duoble attaching clip LNG2 10/10PP
86	060151538	1	COVER, Cover plate DPL2
87	614-6035	2	BOLT, Hex, M6 x 35, 8.8, Full Thd, Bolt, Hex, M6 x 35, 8.8, Full Thd, ISO4017
88	832-10406	2	NUT, M6 x 1, Cl 8, Hex nut M6 DIN982 8
100	614-16035	4	BOLT, Hex, M16 x 35, 8.8, Hex, M16 x 35, 8.8, ISO4017
101	06577093	6	WASHER, LOCK, Locking washer M16
102	825-1416	4	NUT, M16, Cl 8,
150		1	к001-01.00.000 кронштейн

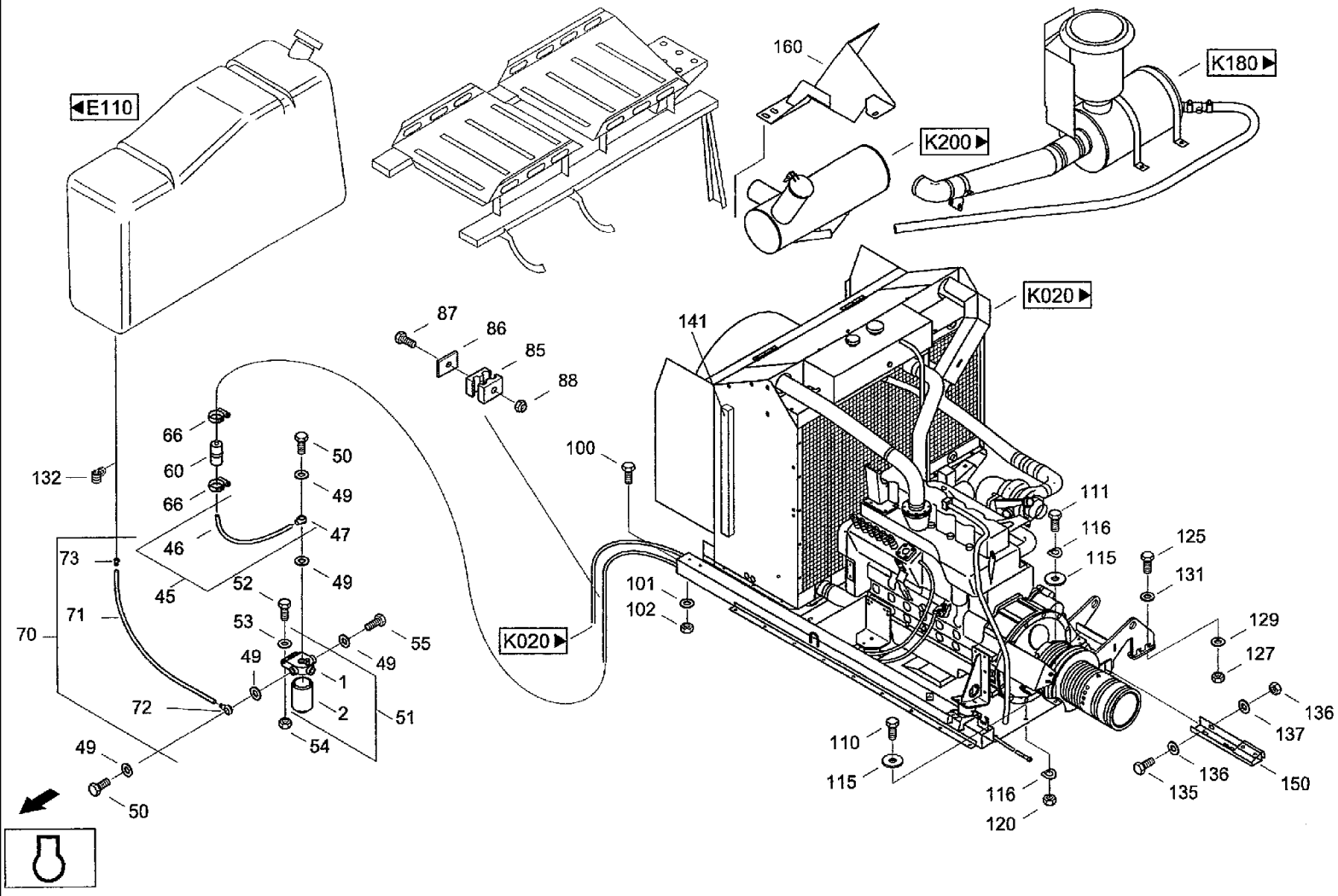
◀E110
160
K200▶
K180▶
K020▶
87
86
85
88
141
100
66
60
66
132
50
49
47
46
73
45
52
49
71
70
53
55
49
49
1
72
2
51
54
49
50
111
116
115
125
131
129
127
136
137
136
135
150
101
102
K020▶
110
115
116
120

CF80 CASE IH CROSS FLOW COMBINE

K010(02) ENGINE- VARIOUS COMPONENTS

Ref	Part Number	Qty	Description
1	07090674	1	POPPET, VALVE, Bypass ELEVATOREINHEIT
2	07090666	1	SENSOR, Sensor
3	31337061	1	PLATE, Plate LH
4	06577036	4	WASHER, SPECIAL, Locking washer M6
5	825-1406	4	NUT, M6, Cl 8,
6	060526703	3	CLAMP, Pipe clip D1-13x15W1-1 DIN3016
7	06577036	4	WASHER, SPECIAL, Locking washer M6
8	825-1406	5	NUT, M6, Cl 8,
10	31352848	1	SENSOR, Sensor k
20	238697A1	1	CAP ASSY., Cap LENKRAD F.AFS
21	238638A1	1	SYMBOLS, Symbol AFS

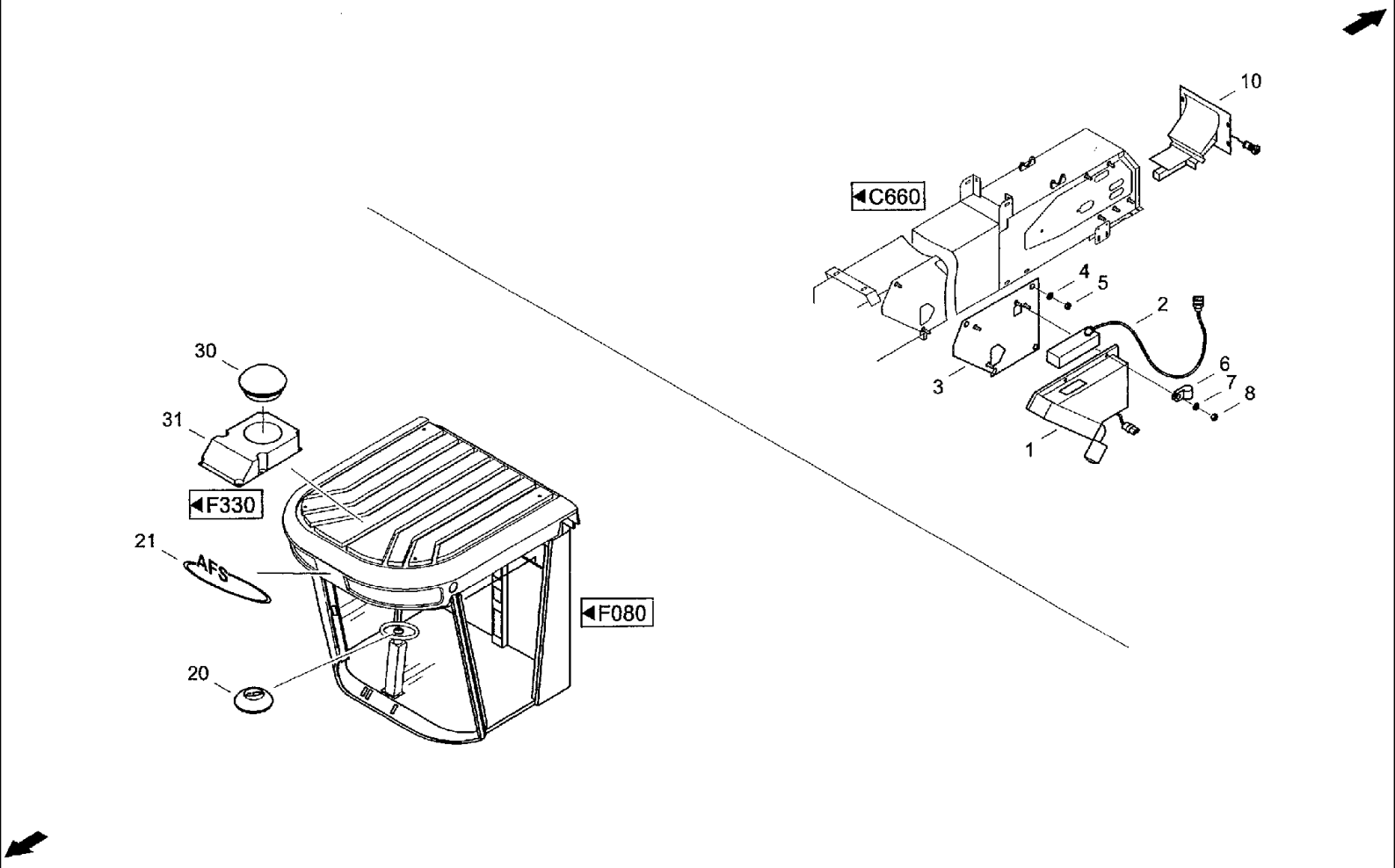
10
C660
4
5
2
3
6
7
8
1
30
31
F330
21
AFS
F080
20

CF80 CASE IH CROSS FLOW COMBINE

K020(01) ENGINE- POWER UNIT

Ref	Part Number	Qty	Description
1	07090674	1	POPPET, VALVE, Bypass ELEVATOREINHEIT
2	07090666	1	SENSOR, Sensor
3	31337061	1	PLATE, Plate LH
4	06577036	4	WASHER, SPECIAL, Locking washer M6
5	825-1406	4	NUT, M6, Cl 8,
6	060526703	3	CLAMP, Pipe clip D1-13X15W1-1 DIN3016
7	06577036	4	WASHER, SPECIAL, Locking washer M6
8	825-1406	5	NUT, M6, Cl 8,
10	31352848	1	SENSOR, Sensor k
20	238697A1	1	CAP ASSY., Cap LENKRAD F.AFS
21	238638A1	1	SYMBOLS, Symbol AFS
30	07090690	1	ANTENNA, Satellite receiver GPS7000
31	31353262	1	PACKAGE, Mounting set ACC-7000-01
120		1	к002-02.00.000 кронштейн
35		1	к002-00.00.005 болт
37		1	к002-00.00.006 втулка
22		1	06103264 штуцер
118		1	5552-1400:209/04 Пружина
119		1	К002-00.00.119 Шпилька

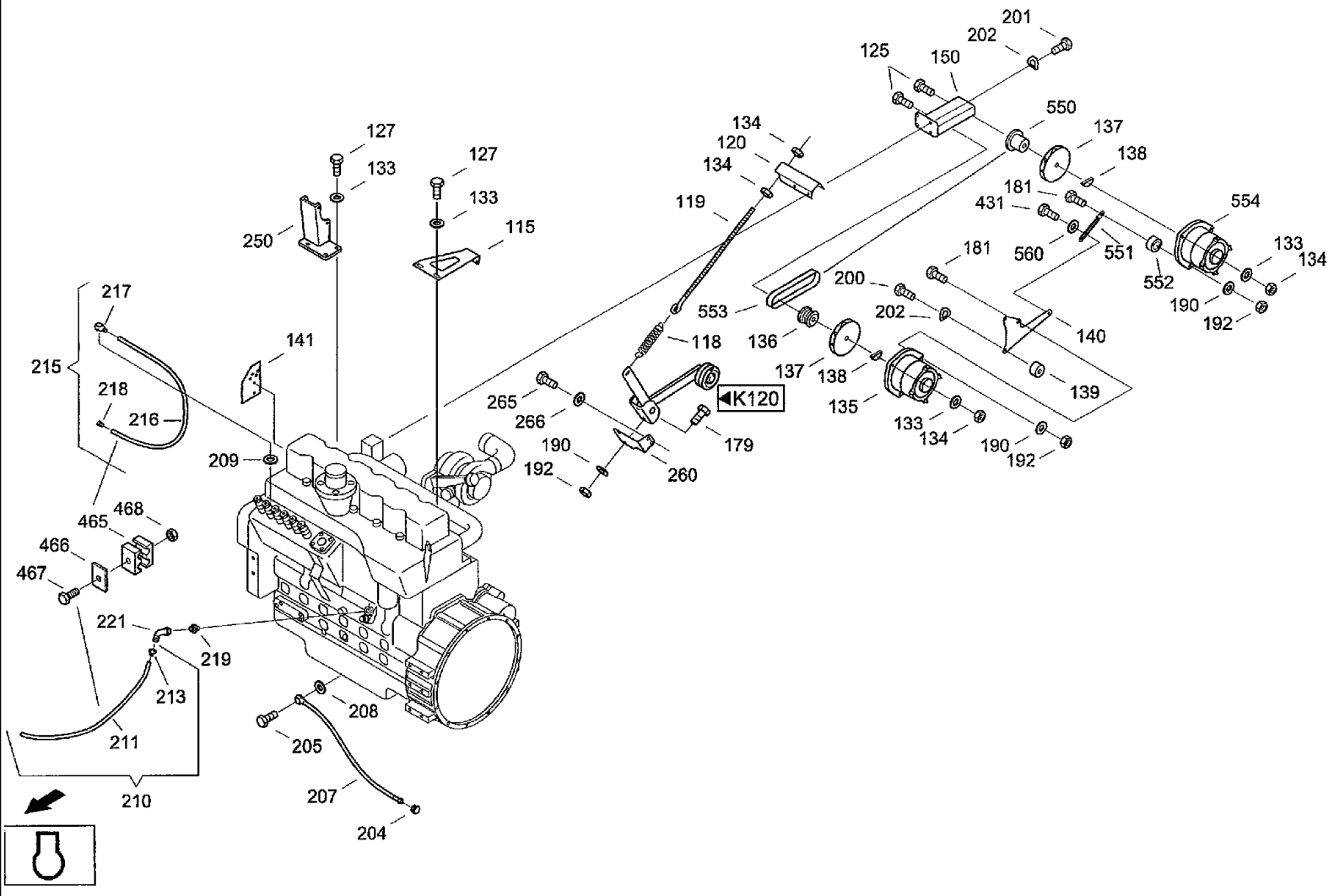
201
202
125
150
550
137
138
134
120
134
119
181
431
554
560
551
552
133
134
190
192
181
200
202
140
553
136
137
138
139
135
133
134
190
192
118
265
266
190
192
260
179
K120
127
133
250
127
133
115
217
215
218
216
209
141
465
468
466
467
221
219
213
211
208
205
207
204
210

CF80 CASE IH CROSS FLOW COMBINE

K020(02) ENGINE- POWER UNIT

Ref	Part Number	Qty	Description
139	061078334	2	SLEEVE, Sleeve
140	31351910	1	SHEET, Supporting plate
141	31303181	1	PLATE, LARGE, Plate
150	31302043	1	SUPPORT, Support LICHTMASCHINE
160	31299407	1	PIPE, Pipe bend к002-06.00.000 колено трубчатое
179	614-12035	2	BOLT, Hex, M12 x 35, 8.8, Full Thd, Hex bolt M12x35ISO40178.8
180	614-12030	20	BOLT, Hex, M12 x 30, 8.8, Hex bolt M12x301SO40178.8
181	614-12045	6	BOLT, Hex, M12 x 45, 8.8, Hex bolt M12x45ISO40178.8
182	814-12130	2	BOLT, Hex, M12 x 130, 8.8, Hex bolt M12x130ISO40148.8
185	001146358	4	WASHER, Rubber spring
186	514-1019	4	BOLT, Hex, M16 x 1.5 x 30, 8.8, Full Thd, Hex, M16 x 1.5 x 30, 8.8, Full Thd, ISO8676
187	06577093	4	WASHER, LOCK, Locking washer M16
188	864-12025	8	SCREW, Hex Soc Hd, M12 x 25, 8.8, Cheese-head screw M12x25DIN9128.8
189	06577132	1	WASHER, Locking washer Z12
190	06577011	41	PLATE, LOCKING, Locking washer M12
192	825-1412	19	NUT, M12, Cl 8, Hex nut M12ISO40328
200	614-8050	2	BOLT, Hex, M8 x 50, 8.8, Full Thd, Hex bolt M8x50 ISO4017 8.8
201	614-8020	2	BOLT, Hex, M8 x 20, 8.8, Hex bolt M8x20ISO40178.8
202	06501380	4	WASHER, CUP, Wave washer spring B8DIN137FST
204	003792994	1	VANEUM GAUGE, Locking screw XROV15-L мм-92994 пробка м20*1,5
205	006106844	1	SCREW, Hollow screw 15DIN7643HSM18X1.5 006106844 пустотелый болт
207	06549520	1	LINE, Hose line PSI113x2500AFLB
208	04101608	2	GASKET, Seal A18X22DIN7603CU
209	04101407	2	GASKET, Seal A14x18DIN7603CU
210	061078391	1	HOSE, Fuel line

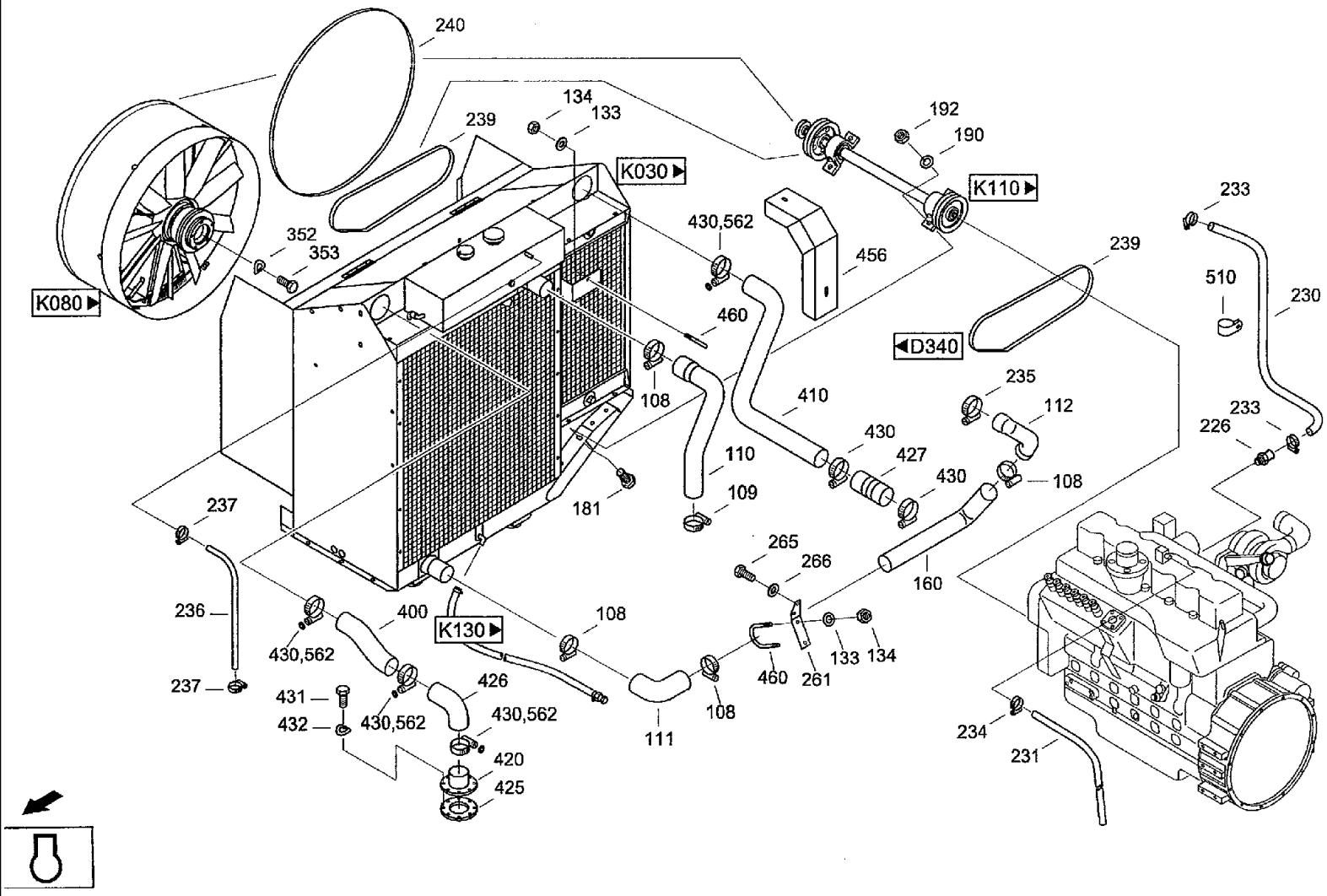
240
239
134
133
K030
192
190
K110
233
352
353
430,562
456
239
510
230
K080
460
D340
108
410
235
112
233
226
430
427
110
430
108
181
109
237
265
266
160
236
400
K130
108
430,562
133
134
237
460
261
426
431
432
430,562
430,562
108
111
234
231
420
425

CF80 CASE IH CROSS FLOW COMBINE

K020(03) ENGINE- POWER UNIT

Ref	Part Number	Qty	Description
211	061078406	1	HOSE, Tube
213	060516357	1	CONNECTOR, HYD., Connection 016x1,5-8
215	31286201	1	HOSE, Fuel line
216	31286218	1	HOSE, Tube 528-50201:216 труба
217	060516340	1	BOLT, BANJO, Ring segment R14-8 мм-92994-01 штуцер
218	060516357	1	CONNECTOR, HYD., Connection 016x1,5-8 штуцер
219	060534053	1	RESTRICTOR, Male connector XGE10-L/1/2NPT
221	060521780	1	FITTING, Threaded elbow joint EW10-L/OMD/A3C
226	31298174	1	FITTING, Male connector
230	061013737	1	LINE, Cooling water hose
231	31298535	1	PIPE, Connecting hose
233	003792777	2	CLAMP, Hose clip AL32-50-W2-1 DIN3017
234	006623236	1	CLAMP, Hose clip AL16-27-W2-1 DIN3017
235	98041560	1	NO DESCRIPTION, Hose clip SGT 60-80/1 3-C7W1
236	31290456	1	HOSE, Connecting hose
237	060505563	2	CLAMP, Hose clip AL12-22-W2-1 DIN3017
239	060206971	2	BELTS, SET OF 2, Narrov v-belt set 2SPAx1600LW+/-15
240	060206988	1	V-BELT, V-belt I, 10x2600+7-8
241	31302076	1	BELT, Drive belt 8 PK 2140 LB +/-8
250	061078414	1	SUPPORT, Support к002-05.00.000 кронштейн
260	31316475	1	ANGLE BAR, Angle к002-00.00.260 уголок
261	061078527	1	ANGLE, Holding angle к002-00.00.261 пластина
265	814-12060	4	BOLT, Hex, M12 x 60, 8.8, Hex bolt M12X60ISO40148.8
266	06577011	4	PLATE, LOCKING, Locking washer M12
270	061076500	1	TUBE, Elbow union
250-1		1	к002-07,00,000 натяжитель
250-2		1	к002-00.00.004 упор

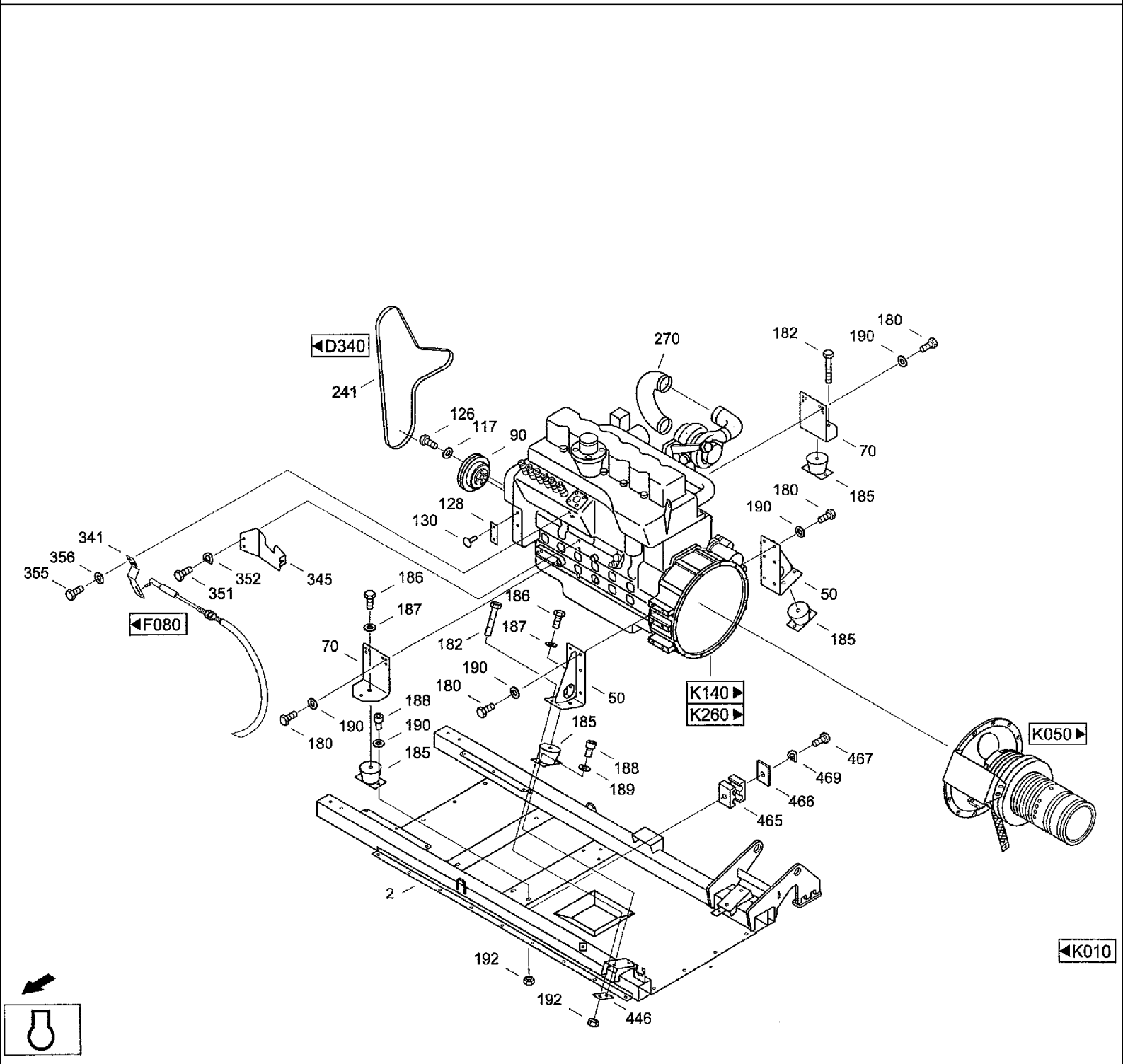
◀D340
241
126
117
90
270
182
190
180
70
185
128
130
180
190
50
185
341
356
355
351
352
345
186
187
◀F080
70
182
186
187
190
180
188
190
180
185
50
K140▶
K260▶
185
188
189
K050▶
467
469
466
465
2
192
192
446
◀K010

CF80 CASE IH CROSS FLOW COMBINE

K020(04) ENGINE- POWER UNIT

Ref	Part Number	Qty	Description
341	31302123	1	LEVER, Adjuster 528-50201:341/01 рычаг регулировочный
345	31302131	1	HOLDER, Holder-up SOOHp
351	614-10020	2	BOLT, Hex, M10 x 20, 8.8, Full Thd,
352	06501428	7	WASHER, SPRING, Wave washer spring B10DIN137FST
353	614-10055	5	BOLT, Hex, M10 x 55, 8.8, Full Thd, Hex bolt M1 0x551304017 8.8
355	614-6016	2	BOLT, Hex, M6 x 16, 8.8,
356	06577036	2	WASHER, SPECIAL, Locking washer M6
400	061076976	1	PIPE, Charge air pipe к002-03.00.000 воздуховод
410	061076968	1	PIPE, Charge air pipe к002-04.00.000 воздуховод
420	061078471	1	RESTRICTOR, Socket
425	061077011	1	GASKET, Seal
426	061069173	1	ELBOW, Manifold
427	01461222	1	AIR FLEXIBLE, Charge air hose
430	06659175	6	CLAMP, Hose clip 01-84x25 DIN3017W2-1
431	614-8025	9	BOLT, Hex, M8 x 25, 8.8,
432	06501380	8	WASHER, CUP, Wave washer spring B8DIN137FST
446	061029865	1	PLATE, Plate 527-50201:446/04 пластина
456	31299392	1	PROTECTION PLATE, Guard
460	072008946	2	SHIN, Bracket 545-50200:135/04 скоба
465	060516486	4	CLAMP, Duoble attaching clip LNG2 10/10PP 525-55797:030 хомут двойной
466	060151538	5	COVER, Cover plate DPL2 525-55797:031 накладка
467	614-6030	4	BOLT, Hex, M6 x 30, 8.8, Full Thd, Hex bolt M6x30iSO40178.8
468	832-10406	1	NUT, M6 x 1, Cl 8, Hex nut M6 DIN982 8
469	06501397	3	WASHER, SPRING, Wave washer spring B6DIN137FST
510	98039906	2	FIXING BRACKET, Pipe clip D1-38x20W1-1 DIN3016

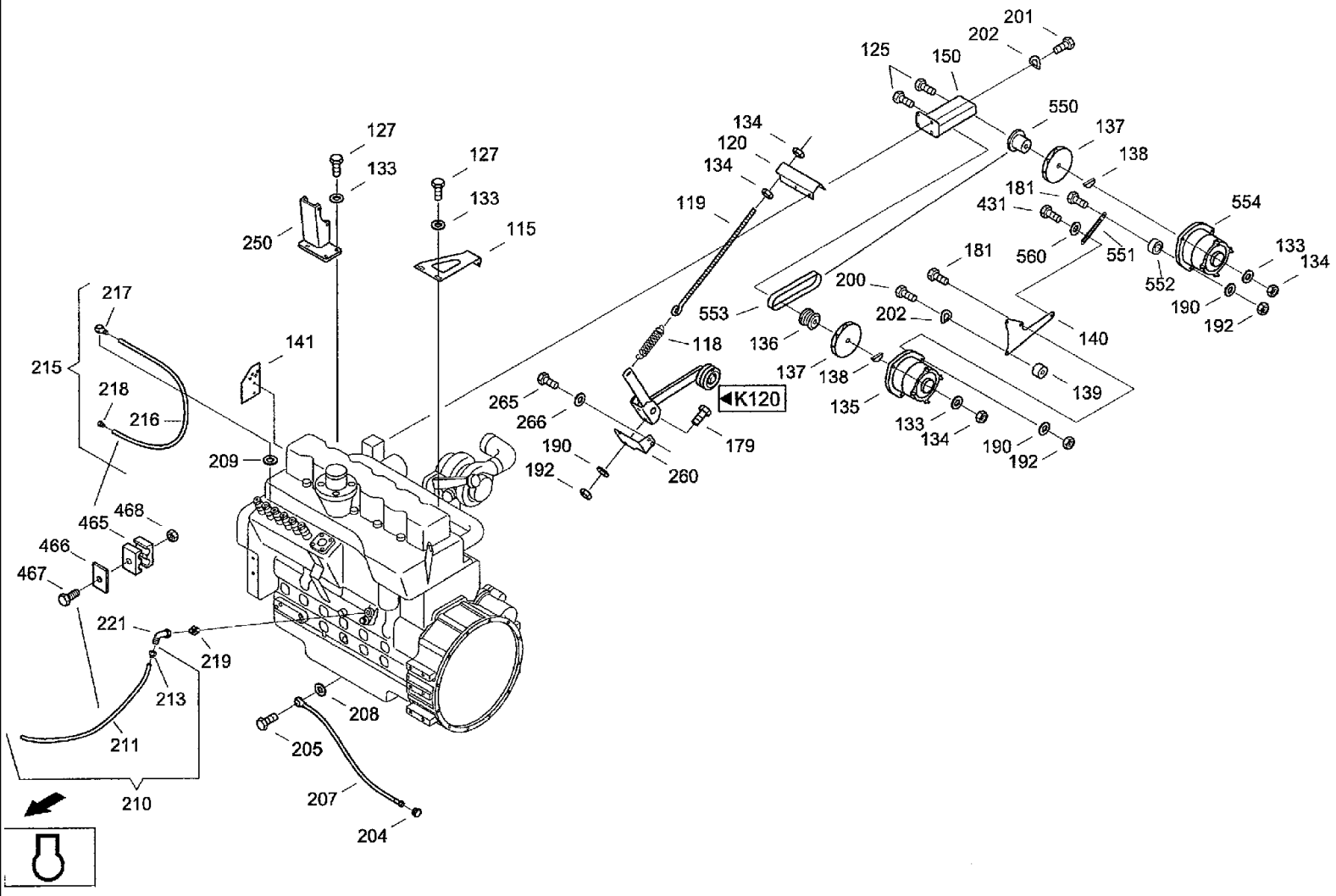
201
202
125
150
550
137
138
134
120
134
119
181
431
554
560
551
552
133
134
190
192
181
200
202
553
136
137
138
135
133
134
190
192
140
139
127
133
250
127
133
115
217
215
218
216
141
209
265
266
190
192
118
179
260
K120
465
468
466
467
221
219
213
211
210
208
205
207
204

CF80 CASE IH CROSS FLOW COMBINE

K020(05) ENGINE- POWER UNIT

Ref	Part Number	Qty	Description
550	31302035	1	PULLEY, V-belt pulley
551	31300974	1	STIRRUP, Bracket
552	31302051	1	BUSHING, Sleeve
553	31302068	1	BELT, Narrow v-belt SPZ 660 LW +/-6mm
554	07078411	1	ALTERNATOR, Alternator 14V29/90A
560	06577044	1	WASHER, SPECIAL, Locking washer B8
562	06577028	4	WASHER, SPECIAL, Locking washer M8

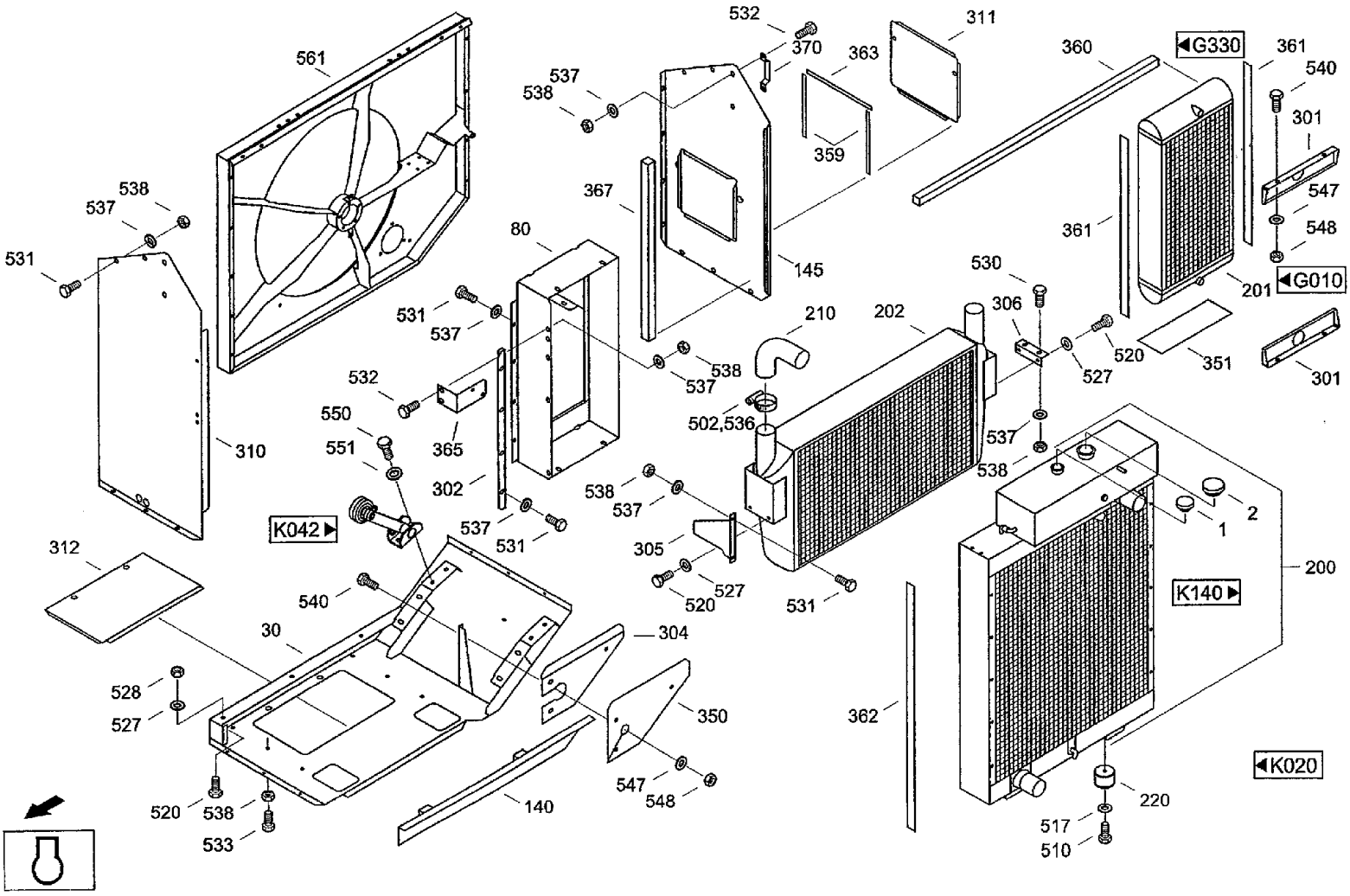
561
538
537
531
310
532
370
363
311
360
G330
361
540
301
547
548
G010
201
351
359
367
80
145
537
538
531
532
550
551
365
302
K042
312
540
30
528
527
520
538
533
140
304
350
547
548
210
202
530
306
520
527
502,536
537
538
305
520
527
531
362
K140
200
1
2
220
517
510
K020

CF80 CASE IH CROSS FLOW COMBINE

K030(01) ENGINE- RADIATOR SYSTEM

Ref	Part Number	Qty	Description
1	02021755	1	PLUG, Radiator filler cap DV57/1.0BAR
2	060511014	1	CAP, RADIATOR, Radiator filler cap V80-OHNEVENTIL
30	061076822	1	PLATE, Base plate к003-01.00.000 пластина основания
50	31316370	1	SHEET, Upper part к003-02.00.000 верхняя часть
70	060205938	1	GUIDE, Duct 525-55603:070/03M воздуховод
80	061076896	1	FRAME, Frame к003-03.00.000 рама
100	061076943	1	COVER, Cap к003-04.00.000 крышка
125	072008464	1	BEARING, Bearing 545-50203:125/04 опора
130	061074878	1	ARM, Clamping arm 528-50203:130 кронштейн
140	061077036	1	RAIL, Rail к003-07.00.000 шина
145	061077060	1	COWL, Side cladding к003-05.00.000 облицовка боковая
200	31342604	1	RADIATOR, Water cooler 1757483
201	31342725	1	COOLER, OIL, Oil cooler
202	061065877	1	VENTILATOR, Aftercooler
205	060043212	1	TIGHTENER SHEAVE, Idler NR. 11
206	072007873	1	BRUSH, Brush
208	060038682	1	BRUSH ASSY., Cleaning brush ST
210	061069173	2	ELBOW, Manifold
220	072007912	2	SPRING, Rubber spring 525-55703:220 амортизатор
225	020510455	2	BUSHING, Sleeve 02051045504/35125 втулка
226	006736236	1	SPRING, TENSION, Tension spring B2,8x25x40AA 524-77801:247/04 пружина
227	006700692	1	SPRING, TENSION, Tension spring A3,2x22x25AA1 5552-1400:209/04пружина
228	060207562	1	THREADED ROD, Capstan 525-55601:119/04 тяговая шпилька
300	061077085	2	SIDE-PLATE, Side panel к003-00.00.001 боковина
301	31342598	2	ORIFICE, Panel 528-50203:301-01 пластина

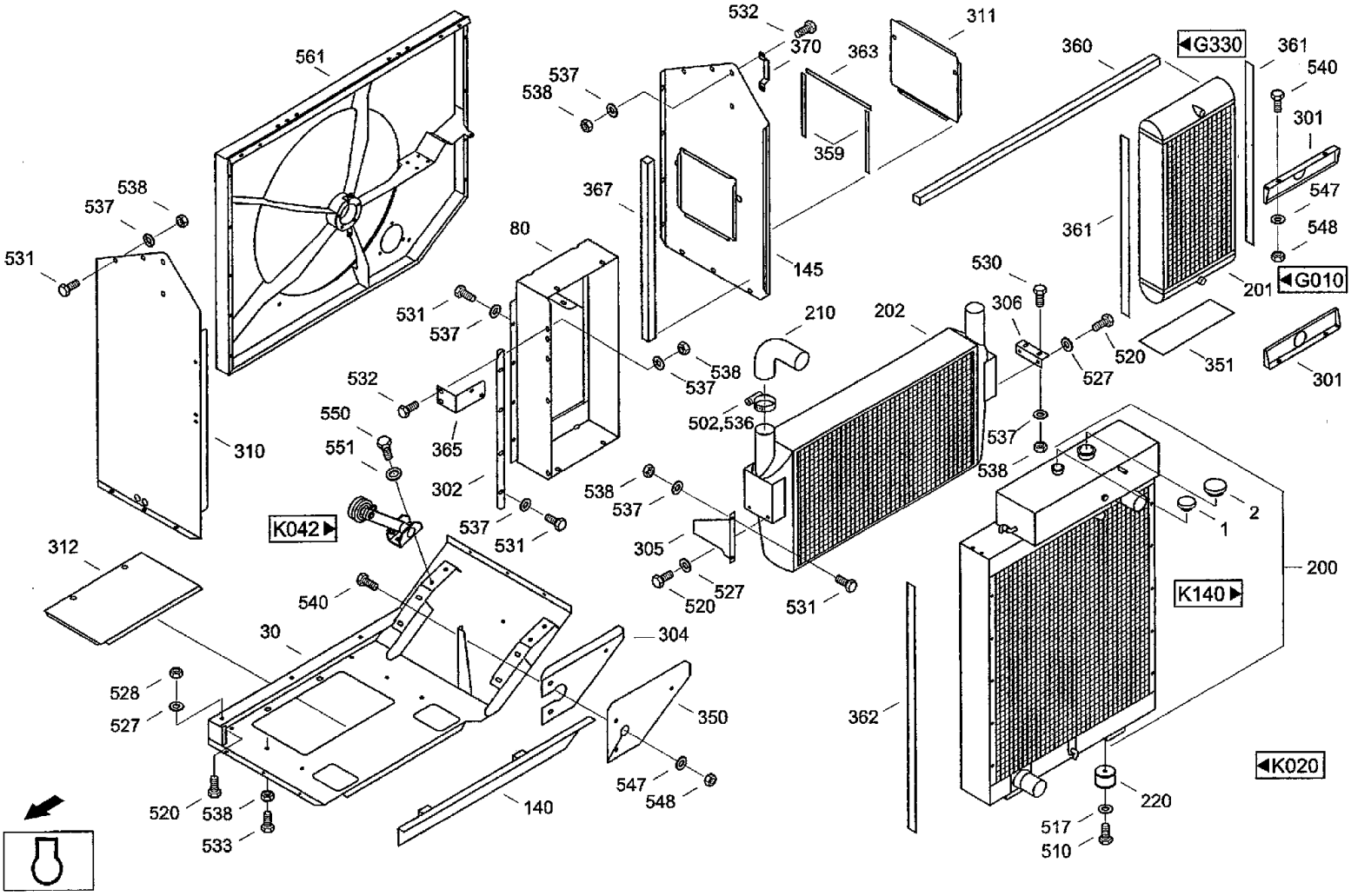
561
532
370
311
363
360
◄G330
361
540
537
538
359
301
547
548
367
80
145
361
201
◄G010
530
531
537
210
202
306
520
527
351
301
532
550
551
365
310
502,536
537
538
302
538
537
537
531
K042►
305
527
520
531
312
540
30
304
528
527
350
362
K140►
200
1
2
547
548
520
538
533
140
220
517
510
◄K020

CF80 CASE IH CROSS FLOW COMBINE

K030(02) ENGINE- RADIATOR SYSTEM

Ref	Part Number	Qty	Description	
302	061077702	1	ANGLE, Angle	528-50203:302 уголок
303	072008657	1	LEVER, Lever	545-50203:303/03 рычаг
304	061077710	1	COVER, PROTECTIVE, Cover	528-50203:304 покрытие
305	061077727	1	BRACKET, Console	к003-00.00.002 кронштейн
306	061077735	1	ANGLE, Angle	к003-00.00.003 уголок
307	061077743	1	COVER, PROTECTIVE, Cover	528-50203:307 покрытие
308	060042148	8	SHAFT, SHORT, Plate with thread	524-50205:011/04 пластина
310	061077751	1	COWL, Side cladding	к003-06.00.000 облицовка боковая
311	061077768	1	COVER, Cap	к003-00.00.006 крышка
312	061077776	1	COVER, Cap	к003-00.00.005 крышка
315	061077784	1	SHROUD, Cover plate	к003-00.00.007 облицовкв
316	061077792	1	SHROUD, Cover plate	к003-00.00.008 облицовка
317	31316395	1	SUPPORT, Rail	к003-00.00.009 планка
318	061077815	1	LINKAGE, Connection	к003-00.00.010 планка
350	061074845	1	PAD, RUBBER, Rubber pad	528-50203:350 коврик резиновый
351	061074861	1	HOLDER, Intermediate shim	528-50203:351 подкладка
352	061074853	1	PAD, RUBBER, Rubber pad	528-50203:352 пластина резиновая
355	061077823	1	STRIP, SEALING, Sealing strip	
356	061077831	2	STRIP, SEALING, Sealing strip	
357	061077848	2	STRIP, SEALING, Sealing strip	
358	061077856	2	STRIP, SEALING, Sealing strip	
359	061077864	2	STRIP, SEALING, Sealing strip	
360	01459076	1	STRIP, SEALING, Sealing strip	1,31M 32x35-1310
361	31343010	2	STRIP, SEALING, Sealing strip	
362	061077897	1	STRIP, SEALING, Sealing strip	

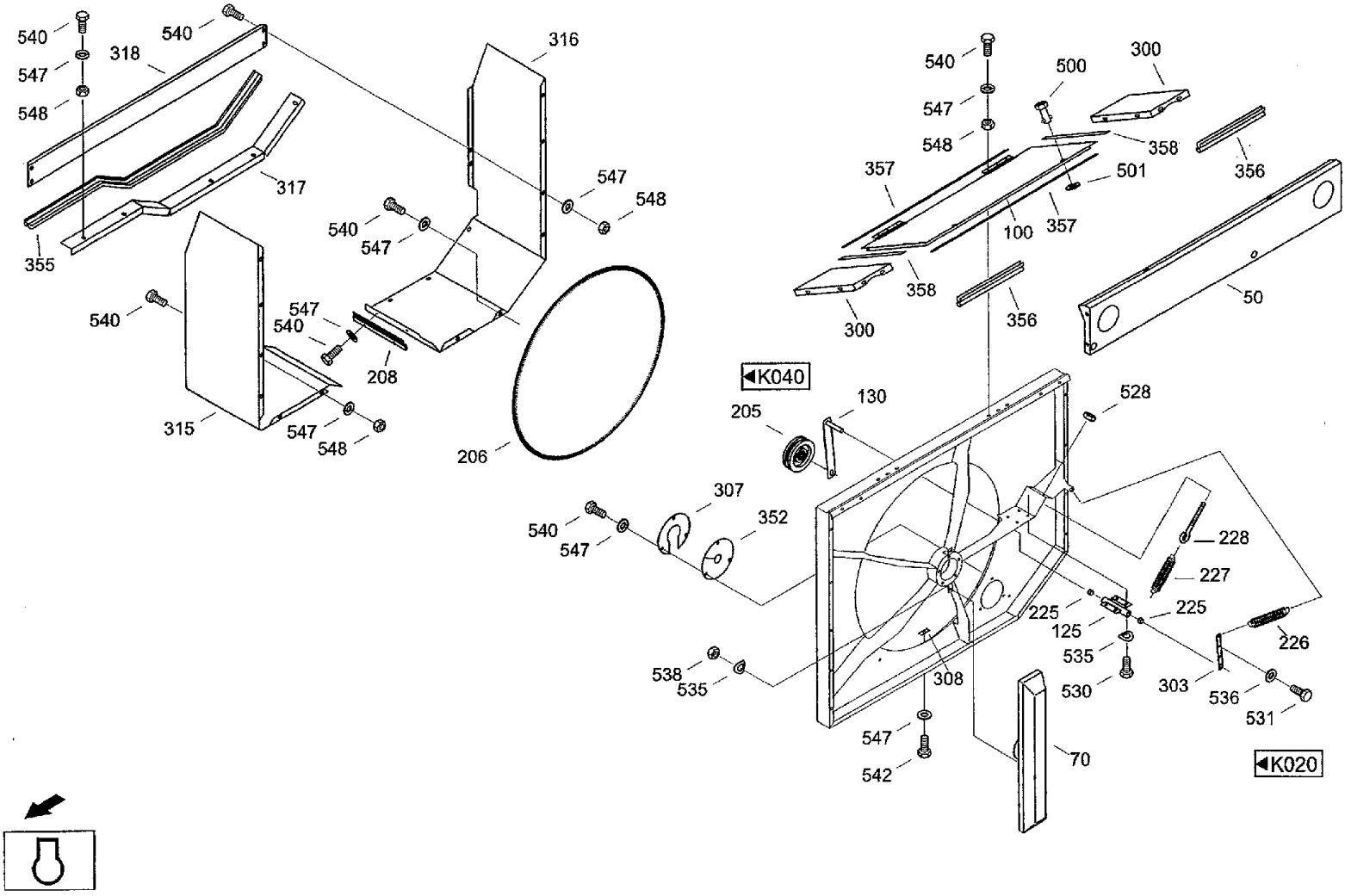
540
547
548
318
540
316
317
355
547
548
540
547
540
547
540
208
315
547
548
206
540
547
500
300
548
358
357
501
356
357
100
358
356
300
50
◄K040
205
130
528
307
352
540
547
228
227
225
225
125
226
535
538
535
308
530
303
536
531
547
542
70
◄K020

CF80 CASE IH CROSS FLOW COMBINE

K030(03) ENGINE- RADIATOR SYSTEM

Ref	Part Number	Qty	Description
363	31291344	1	STRIP, SEALING, Sealing strip
365	31318598	1	ANGLE, Support
367	31298166	1	STRIP, SEALING, Sealing strip
370	31300652	1	HANDLE, Handle
500	060515950	6	PIN, LARGE, Closing bolt
501	03427516	6	DISC, Holding disk 800-VH-NA
502	06659175	2	CLAMP, Hose clip C1-84x25DIN3017W2-1
510	614-12016	4	BOLT, Hex, M12 x 16, 8.8, Full Thd, Hex bolt M12x16ISO40178.8
517	06577011	4	PLATE, LOCKING, Locking washer M12
520	614-10020	14	BOLT, Hex, M10 x 20, 8.8, Full Thd,
527	06577003	14	WASHER, SPECIAL, Locking washer M10
528	825-1410	6	NUT, M10, Cl 8,
530	614-8020	6	BOLT, Hex, M8 x 20, 8.8, Hex bolt M8x20ISO40178.8
531	614-8018	38	SCREW, Hex, M8 x 18, 8.8, Full Thd, Hex bolt M8X18ISO40178.8
532	614-8025	7	BOLT, Hex, M8 x 25, 8.8,
533	614-8040	2	BOLT, Hex, M8 x 40, 8.8, Full Thd, Hex, M8 x 40, 8.8, Full Thd
535	06501380	6	WASHER, CUP, Wave washer spring B8DIN137FST
536	06577044	3	WASHER, SPECIAL, Locking washer B8
537	06577028	54	WASHER, SPECIAL, Locking washer M8
538	825-1408	42	NUT, M8, Cl 8,
540	614-6016	40	BOLT, Hex, M6 x 16, 8.8,
542	614-6010	8	BOLT, Hex, M6 x 10, 8.8, Full Thd, Hex bolt M6x10ISO40178.8
547	06577036	59	WASHER, SPECIAL, Locking washer M6
548	825-1406	23	NUT, M6, Cl 8,
550	614-12030	2	BOLT, Hex, M12 x 30, 8.8, Hex bolt M12x30ISO40178.8

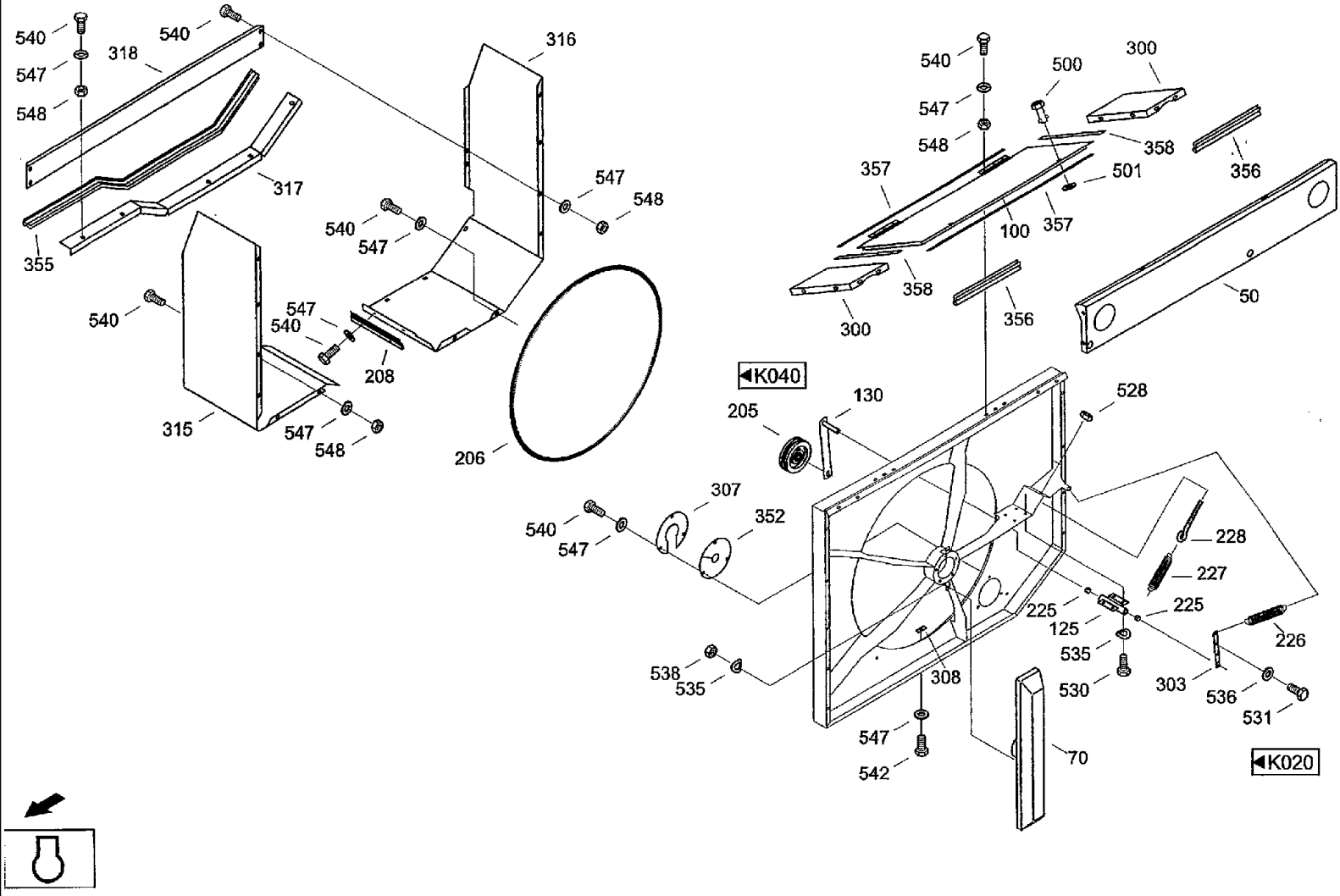
540
547
548
318
540
316
317
355
547
548
540
547
540
547
208
315
547
548
206
540
547
500
300
358
357
501
356
100
357
358
300
356
50
◀K040
205
130
528
307
352
540
547
228
227
225
125
225
226
535
538
535
308
530
303
536
531
547
542
70
◀K020

CF80 CASE IH CROSS FLOW COMBINE

K030(04) ENGINE- RADIATOR SYSTEM

Ref	Part Number	Qty	Description
551	06577011	2	PLATE, LOCKING, Locking washer M12
561	061076767	1	CASE ASSY., Cool, air housing

528-50203:001/01 корпус

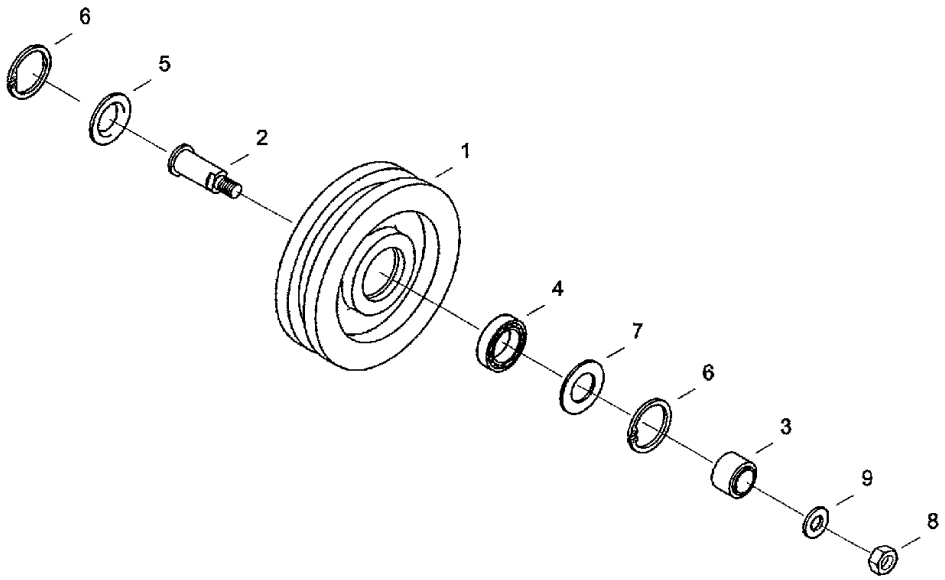

K030

CF80 CASE IH CROSS FLOW COMBINE

K040 ENGINE- IDLER

Ref	Part Number	Qty	Description
1	060043220	1	ROLLER, SHIFTER, Roller 524-50201:001/03 ролик
2	021421084	1	PIN, LARGE, Bolt TGL33857-(65) 021421084 палец
3	020797266	1	BUSHING, Sleeve 5552-4009:003/04 втулка
4	03651878	1	BEARING, Grooved ball bearing 6204-RS DIN625 INA/SKF/SAG
5	03500630	1	COVER, Cap 4733-17127 крышка
6	800-2147	1	RING, SNAP, M47, Int, Snap ring 47x1,75DIN472FST
7	020087255	1	SEAL WASHER, Seal ring 25,5x46,5x0,2 5247-0001:004/04 уплотнительная шайба
8	825-1412	1	NUT, M12, Cl 8, Hex nut M12 1SO4032 8
9	06577060	1	WASHER, Locking washer B12

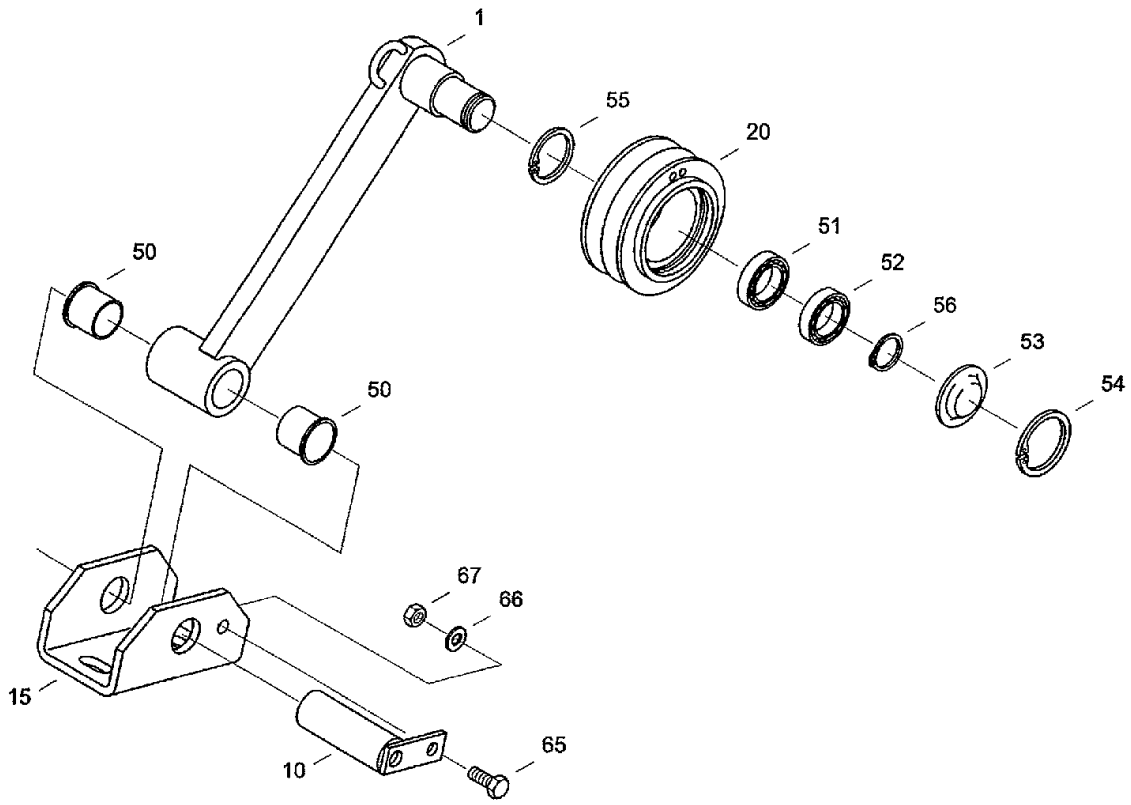

◀K030

CF80 CASE IH CROSS FLOW COMBINE

K042 ENGINE- TENSIONING DEVICE

Ref	Part Number	Qty	Description
1	060204422	1	LEVER, ROCKER, Rocker 525-55615:001/03 балансир
10	061036567	1	PIN, PIVOT, Bearing pin GS66L-2240:000/04 палец опорный
15	061036550	1	CRADLE, Bearing bracket GS66L-2200:003/03 вилка опорная
20	060204430	1	ROLLER, SHIFTER, Roller 525-55615:020/03 ролик
50	060514121	2	HALF BUSH, Bushing GFM-2528-21 подшипник
51	03652034	1	BEARING, Grooved ball bearing 6205-RS DIN625
52	97060305	1	BEARING, Grooved ball bearing 6205 DIN625 SKF/
53	03500542	1	COVER, Cap TGL33-17127-(62) крышка
54	800-2162	1	RING, SNAP, M62, Int, Snap ring 62x2 DIN472 FST
55	800-2152	1	RING, SNAP, M52, Int, Snap ring 52x2 DIN472 FST
56	800-1125	1	RING, SNAP, M25, Ext, Snap ring 25x1,2 DIN471 FST
65	614-8022	1	BOLT, Hex, M8 x 22, 8.8, Full Thd, Hex bolt M8x22 ISO4017 8.8
66	06577028	1	WASHER, SPECIAL, Locking washer M8
67	825-1408	1	NUT, M8, Cl 8,

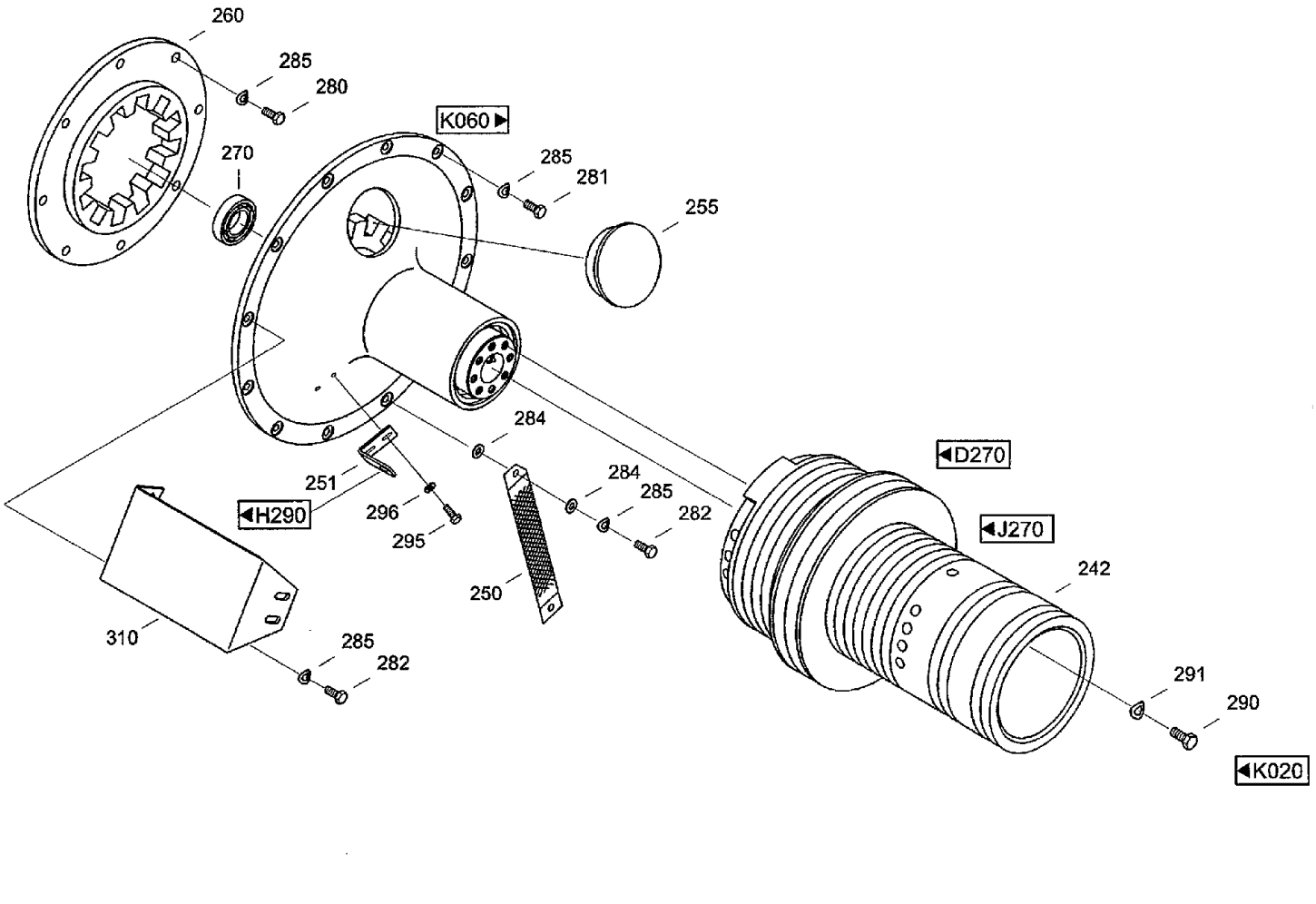
260
285
280
K060
270
285
281
255
284
251
H290
296
295
284
285
282
D270
J270
242
250
310
285
282
291
290
K020

CF80 CASE IH CROSS FLOW COMBINE

K050 ENGINE- OUTPUT MEMBER [1]

Ref	Part Number	Qty	Description
242	31342950		PULLEY, Pulley к005-00.00.007A шкив
250	020253872		CABLE, BATTERY (NEG), Earthing strip
251	061074933		SUPPORT, Support к005-00.00.001 держатель
255	020494992		COVER, Cap 204/50202 крышка
296	06577028	M8	WASHER, SPECIAL, Locking washer
310	31300757		SUPPORT, Support к005-01.00.000 держатель
270		1	к005-00.00.004 втулка

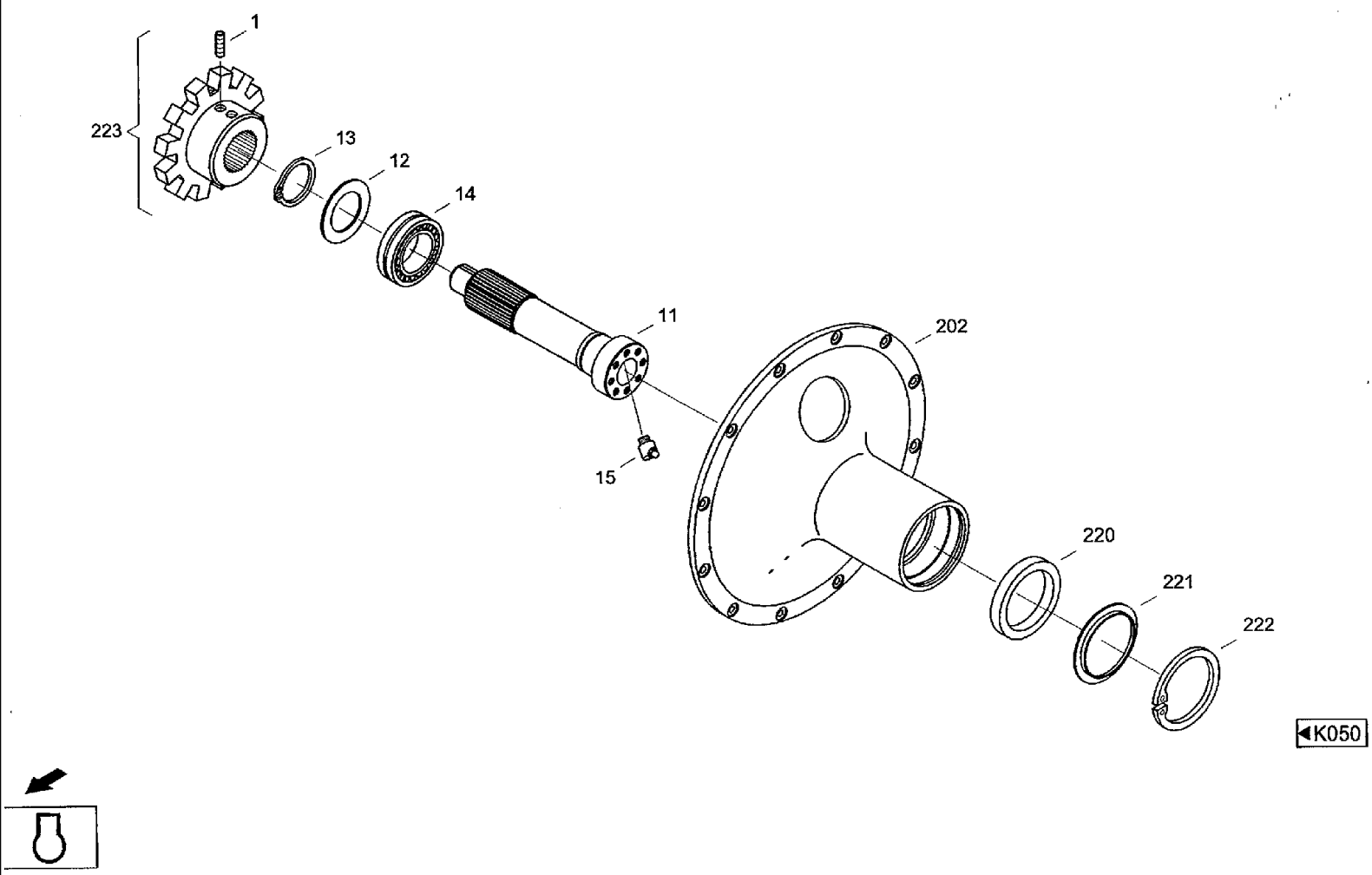
1
223
13
12
14
11
15
202
220
221
222
◀K050

CF80 CASE IH CROSS FLOW COMBINE

K060 ENGINE- OUTPUT MEMBER [2]

Ref	Part Number	Qty	Description
1	02855584	2	PIN, Threaded pin
11	31342967	1	SHAFT, Flange shaft к007-00.00.001 вал
12	061074925	1	SEAL, Seat ring 528-50204:012 уплотнительная шайба
13	800-1170	1	RING, SNAP, M70, Ext, Snap ring 70x2,5 DIN471 FST
14	003680021	1	BEARING, Self-alinging roller bearing 22214 DIN635
15	03640746	1	NIPPLE, LUBE, Grease nippel BM8x1 DIN71412
202	061072601	1	BELL HOUSING, Bell SS-2RZ003799211 528-50204:002A колокол
220	020939465	1	BUSHING, Sleeve 5562-7805:020/01 втулка
221	020213881	1	COVER, Cap 5550-3405:030/04 крышка
222	800-21130	1	RING, SNAP, M130, Int, Snap ring 1 30x4 DIN472 FST
223	060514275	1	PIN, LARGE, Hub star E-CF-K-200-NS-00432- 06

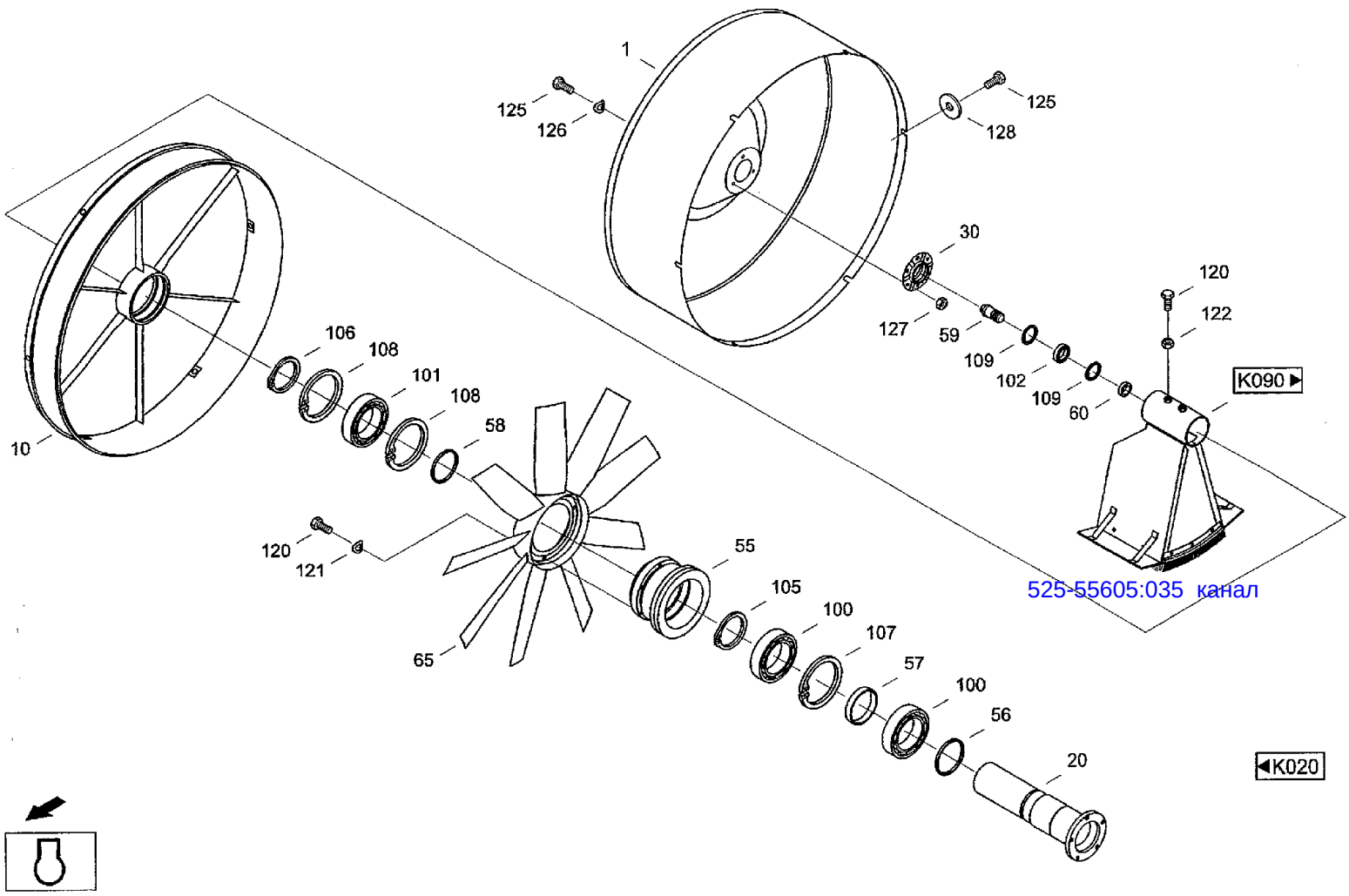

525-55605:035 канал

CF80 CASE IH CROSS FLOW COMBINE

K080(01) ENGINE- SEPARATING DRUM

Ref	Part Number	Qty	Description
1	31289116	1	DRUM, Drum 528-50205:001/02 барабан
10	072000022	1	DISC, Driving ring 545-50205:010/02 приводное кольцо
20	060203928	1	AXLE, Axle 525-55605:020/03 ось
30	060042051	1	HOUSING, BEARING, Bearing housing i ' 524-50205:018/04 корпус подшипника
55	072000055	1	GROOVED PULLEY, V-belt pulley к008-00.00.055 шкив
56	072000063	1	BACK-UP RING, Backup ring
57	072000071	1	BACK-UP RING, Backup ring 545-50205:057/04 опорное кольцо
58	072000088	1	BACK-UP RING, Backup ring
59	072000096	1	SHAFT, CROSS, Pin 545-50205:059 цапфа
60	060042203	1	FERRULE, Pressure plate 524-50205:024/04 нажимная деталь
65	060528914	1	DUCT, Fan 755/6-1 2/6ZL/32.5/ PAG/125 +0, 4035-42600-A0 (0612/202008) вентилятор
100	060514017	2	BEARING, Grooved ball bearing 6017-2RS DIN625
101	060502890	1	BEARING, .Grooved ball bearing 6016-2RS1 DIN625
102	03683258	1	BEARING, BALL, Grooved ball bearing 6005-2RS DIN625 7451 28501
105	800-1185	1	RING, SNAP, M85, Ext, Snap ring 85x3 DIN471 FST
106	800-1180	1	CIRCLIP, M80, Ext, Snap ring 80x2,5 DIN471 FST
107	800-21130	1	RING, SNAP, M130, Int, Snap ring 130x4 DIN472 FST
108	800-21125	2	CIRCLIP, M125, Int, Snap ring 1 25x4 DIN472 FST
109	800-2147	2	RING, SNAP, M47, Int, Snap ring 47x1,75DIN472FST
120	614-8022	8	BOLT, Hex, M8 x 22, 8.8, Full Thd, Hex bolt M8x22IS040178.8
121	06501380	6	WASHER, CUP, Wave washer spring B8DIN137FST
122	825-1408	2	NUT, M8, Cl 8,
125	614-6012	9	BOLT, Hex, M6 x 12, 8.8, Hex bolt M6x12ISO40178.8
126	06501397	3	WASHER, SPRING, Wave washer spring B6 DIN 137 FST
127	825-1406	3	NUT, M6, Cl 8,

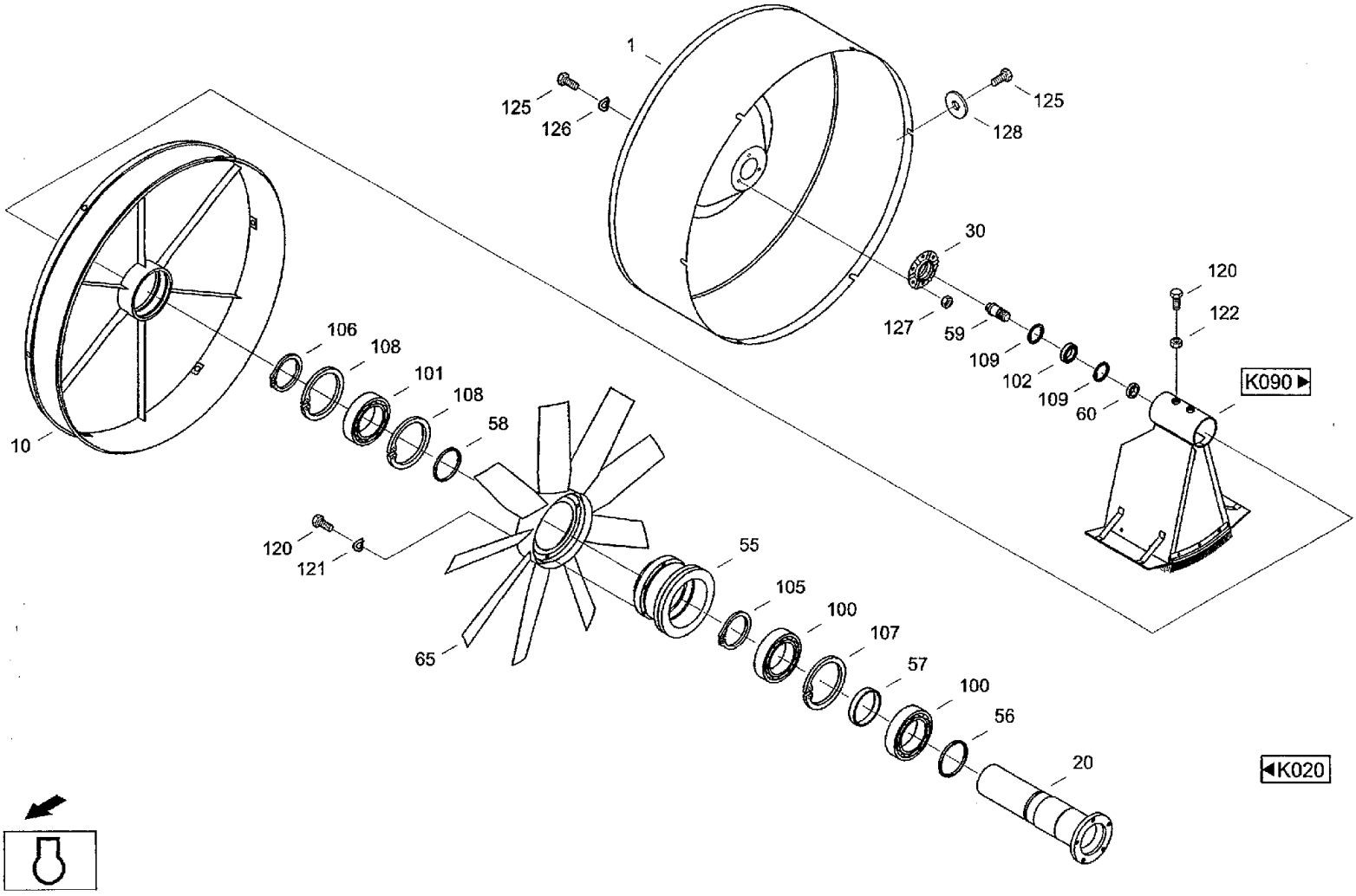
1
125
126
125
128
30
127
59
109
102
109
60
120
122
K090
106
108
101
108
58
10
120
121
55
105
100
107
57
100
56
20
65
K020

CF80 CASE IH CROSS FLOW COMBINE

K080(02) ENGINE- SEPARATING DRUM

Ref	Part Number	Qty	Description
128	895-25006	6	WASHER, M6 x 18 x 1.6, Washer 6,4 DIN9021 646082 шайба 6,4*18*1

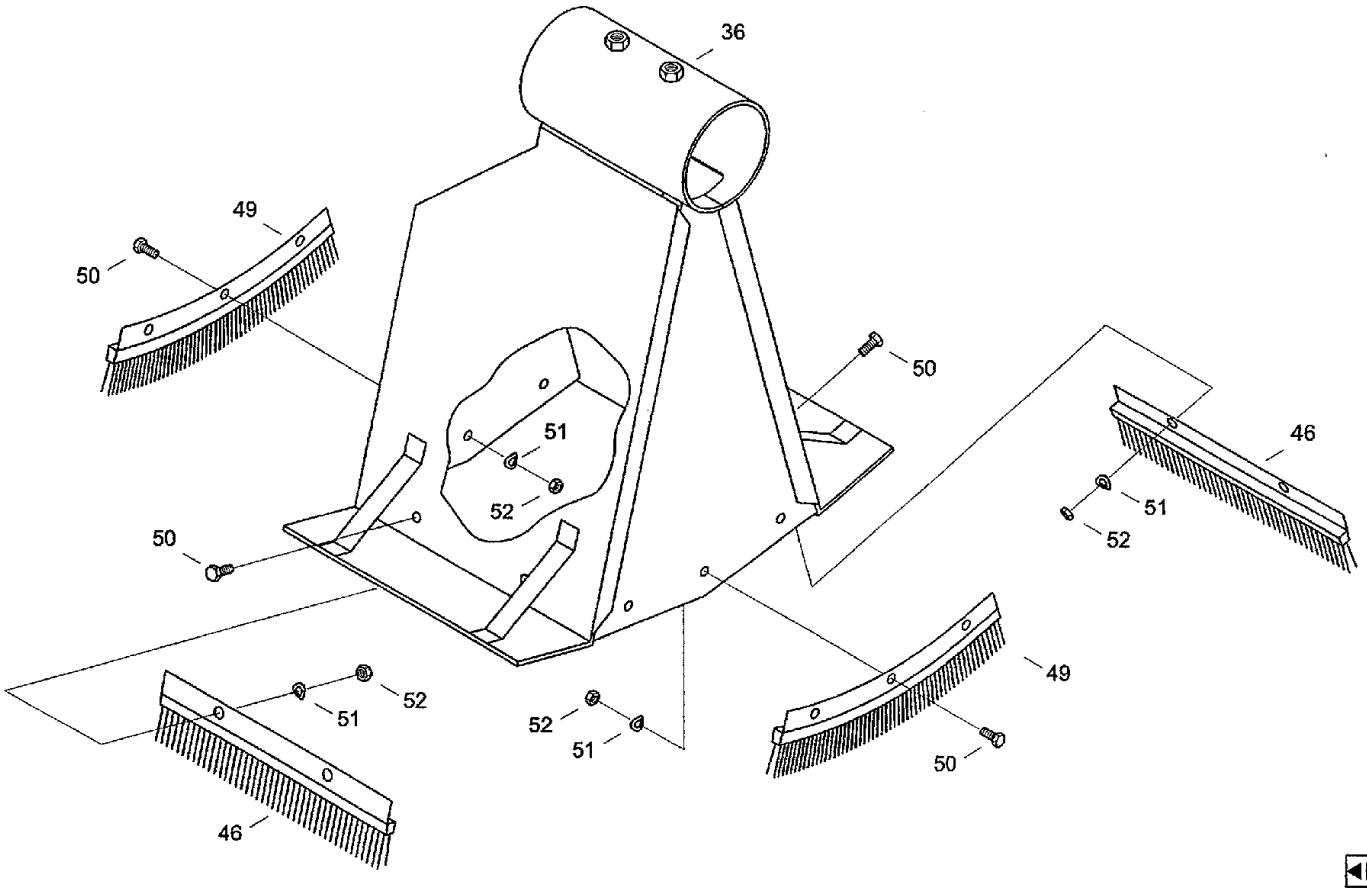
36
49
50
50
51
52
50
46
51
52
52
51
49
50
46
K080

CF80 CASE IH CROSS FLOW COMBINE

K090 ENGINE- SPOUT

Ref	Part Number	Qty	Description
36	060203985	1	CASE, Housing 525-55605:036 корпус
46	072000215	2	BRUSH, Brush
49	072000248	2	BRUSH, Brush
50	614-6010	10	BOLT, Hex, M6 x 10, 8.8, Full Thd, Hex bolt M6x10ISO40178.8
51	06501397	10	WASHER, SPRING, Wave washer spring B6DIN137FST
52	825-1406	10	NUT, M6, Cl 8,

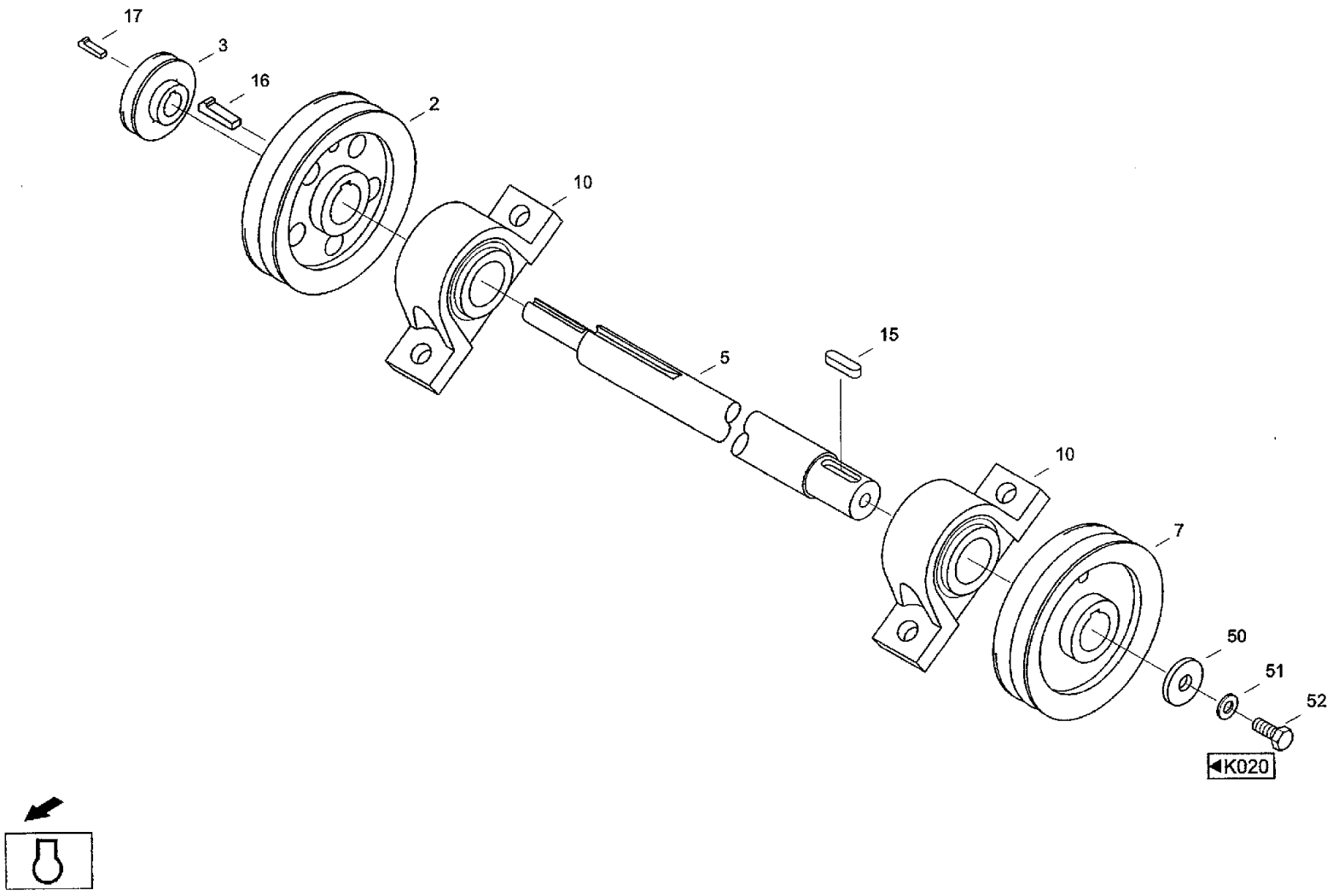
17
3
16
2
10
5
15
10
7
50
51
52
K020

CF80 CASE IH CROSS FLOW COMBINE

K110 ENGINE- TRANSMISSION

Ref	Part Number	Qty	Description
2	060204270	1	GROOVED PULLEY, V-belt pulley 525-55609:002/03 шкив
3	060180575	1	WASHER, Washer 527-50201:126/04 шайба
5	061072634	1	SHAFT, Shaft к011-00.00.001 вал
7	05304955	1	GROOVED PULLEY, V-belt pulley 525-55609:007 шкив
10	03672005	2	CAP CYLINDER END, Pedestal bearing SW35U (SGE207-F23) MIT SCHMIE
15	003791140	1	WASHER, Flat key A1 0x8x45 DIN6885 шпонка
16	003502407	1	KEY, Gib-head key 1 0x8x50 DIN6887 шпонка
17	003503192	1	KEY, Gib-head key 6x6x32 DIN6887 шпонка
50	060162315	1	DISC, End washer TGL17481-(C11x50) шайба концевая
51	06577003	1	WASHER, SPECIAL, Locking washer M10
52	614-10025	1	BOLT, Hex, M10 x 25, 8.8, Full Thd, Hex bolt M10x25ISO40178.8

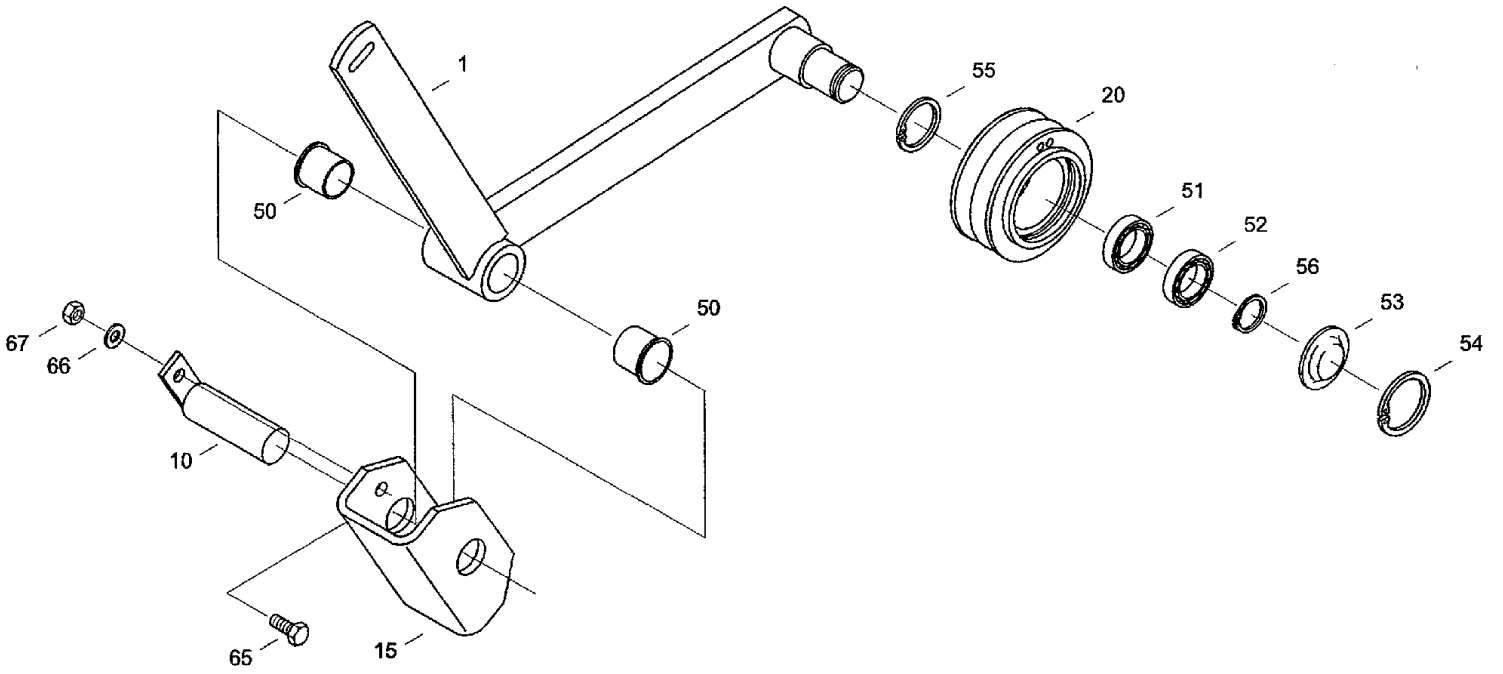

◀K020

CF80 CASE IH CROSS FLOW COMBINE

K120 ENGINE- TENSIONING DEVICE

Ref	Part Number	Qty	Description
1	061076718	1	DIPPER, Rocker 528-50216:/03 балансир
10	061036567	1	PIN, PIVOT, Bearing pin GS66L-2240^000/04 палец опорный
15	061036550	1	CRADLE, Bearing bracket GS66OL-2200^003/03 вилка опорная
20	060204430	1	ROLLER, SHIFTER, Roller 525-55615:020/03 ролик
50	060514121	2	HALF BUSH, Bushing GFM-2528-21 060514121 втулка
51	03652034	1	BEARING, Grooved ball bearing 6205-RS DIN625
52	97060305	1	BEARING, Grooved ball bearing 6205 DIN625 SKF/
53	03500542	1	COVER, Cap TGL33-17127-(62) 003500542 крышка
54	800-2162	1	RING, SNAP, M62, Int, Snap ring 62x2 DIN472 FST
55	800-2152	1	RING, SNAP, M52, Int, Snap ring 52x2 DIN472 FST
56	800-1125	1	RING, SNAP, M25, Ext, Snap ring 25x1,2DIN471 FST
65	614-8022	1	BOLT, Hex, M8 x 22, 8.8, Full Thd, Hex bolt M8x22 ISO401 7 8.8
66	06577028	1	WASHER, SPECIAL, Locking washer M8
67	825-1408	1	NUT, M8, Cl 8,

K130 ENGINE- DRAIN HOSE

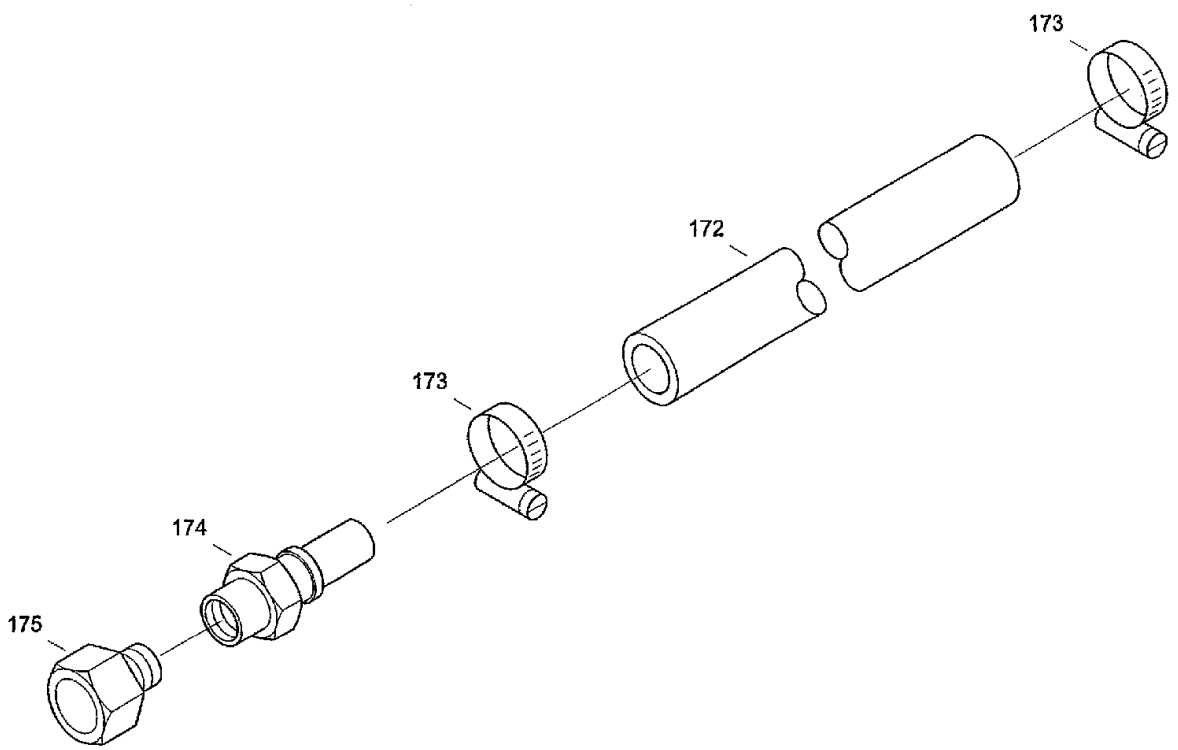

K020

CF80 CASE IH CROSS FLOW COMBINE

K130 ENGINE- DRAIN HOSE

Ref	Part Number	Qty	Description
172	31290095	1	HOSE, Hose
173	06659013	2	CLAMP, Hose clip AL16-27DIN3017W1-1
174	03436486	1	FITTING, REDUCER, Socket PN16HLDIN20078
175	03436494	1	PLUG, Closure nut k, MNW16VKA18-L

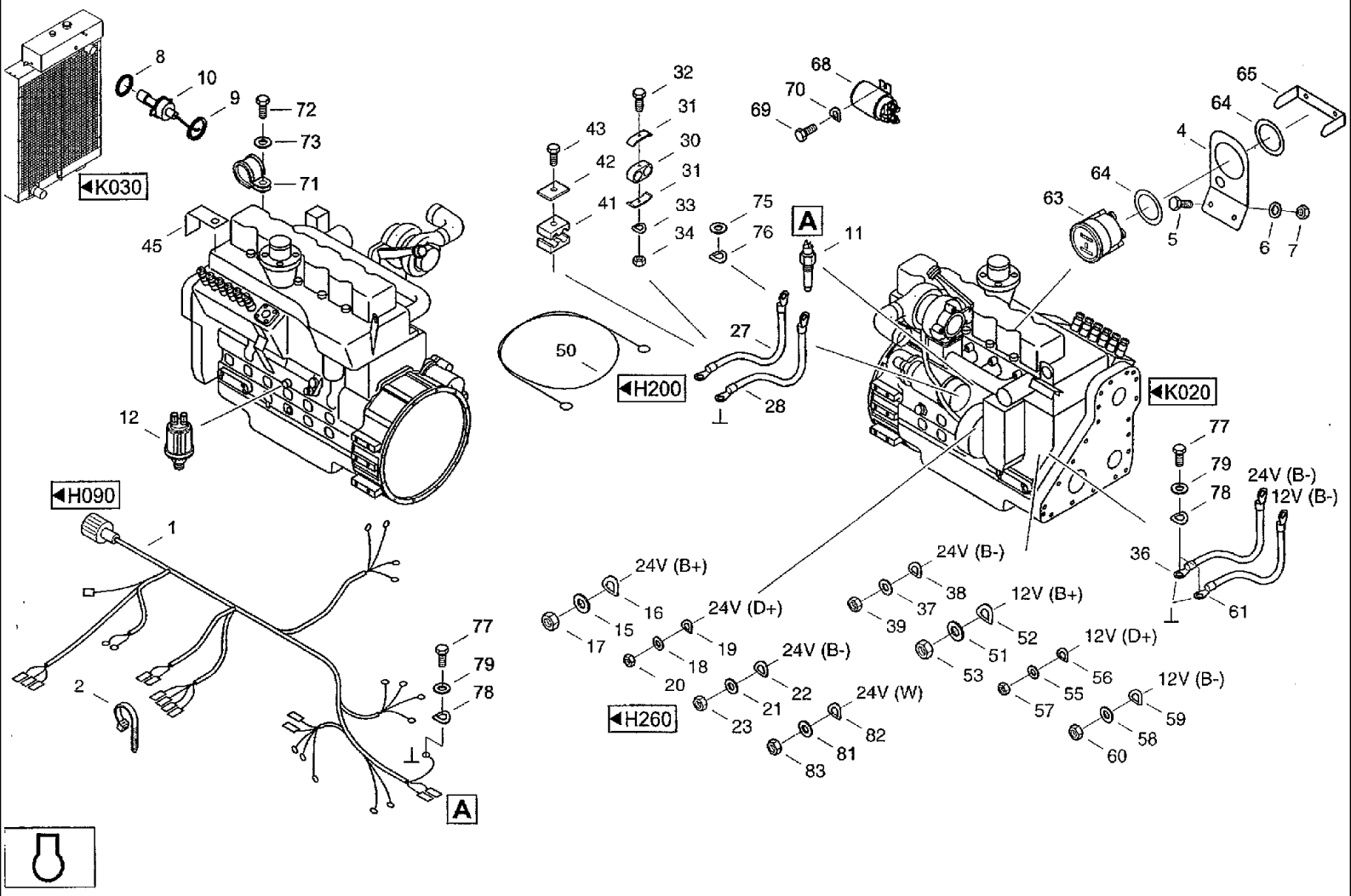
K030
8
10
9
72
73
71
45
12
H090
1
2
77
79
78
A
32
31
30
31
33
34
43
42
41
68
70
69
75
76
A
11
50
H200
27
28
K020
65
64
4
64
63
5
6
7
77
79
78
24V (B-)
12V (B-)
36
61
24V (B+)
16
15
17
24V (D+)
19
18
20
24V (B-)
22
21
23
24V (W)
82
81
83
H260
24V (B-)
38
37
39
12V (B+)
52
51
53
12V (D+)
56
55
57
12V (B-)
59
58
60

CF80 CASE IH CROSS FLOW COMBINE

K140(01) ENGINE- ELECTRICAL EQUIPMENT

Ref	Part Number	Qty	Description
1	07091193	1	HARNESS, Wiring loom MOTOR-CUMMINS
2	07070043	15	CABLE, Cable band 250x4,8 TSL-250-S
4	31302084	1	SUPPORT, Support BH-ZAHLER
5	614-6012	2	BOLT, Hex, M6 x 12, 8.8, Hex bolt M6X12ISO40178.8
6	06577036	2	WASHER, SPECIAL, Locking washer M6
7	825-1406	2	NUT, M6, Cl 8,
8	03253422	1	O-RING, O-ring 14,00x3,00 DIN3771 N-NBR70
9	800-1130	1	RING, SNAP, M30, Ext, Snap ring 30x1,5DIN471 FST
10	03253543	1	SWITCH, Switch
11	060506966	1	SENDOR, TEMPERATURE, Temperature pick-up
12	060509710	1	TRANSMITTER, Pressure probe
15	895-11008	1	WASHER, M8 x 16 x 1.6, Washer 8.4DIN125ST
16	06501380	1	WASHER, CUP, Wave washer spring B8 DIN 137 FST
17	825-1408	1	NUT, M8, Cl 8,
18	895-11004	1	WASHER, M4, Washer 4.3DIN125ST
19	06501268	1	WASHER, SPRING, Wave washer spring B4 DIN 137 FST
20	825-1404	1	NUT, M4, Cl 8,
21	895-11006	1	WASHER, M6, Washer 6.4DIN125ST
22	06501397	1	WASHER, SPRING, Wave washer spring
23	825-1406	1	NUT, M6, Cl 8,
27	07080986	1	CABLE ASSY., Connecting line
28	061071248	1	CABLE, Earth line
30	060504788	3	CLAMP, Duoble attaching clip LNG3 14/14 PA
31	060505387	6	COVER, Cover plate DPL3
32	814-6035	3	BOLT, Hex, M6 x 35, 8.8, Bolt, Hex, M6 x 35, 8.8, ISO 4014

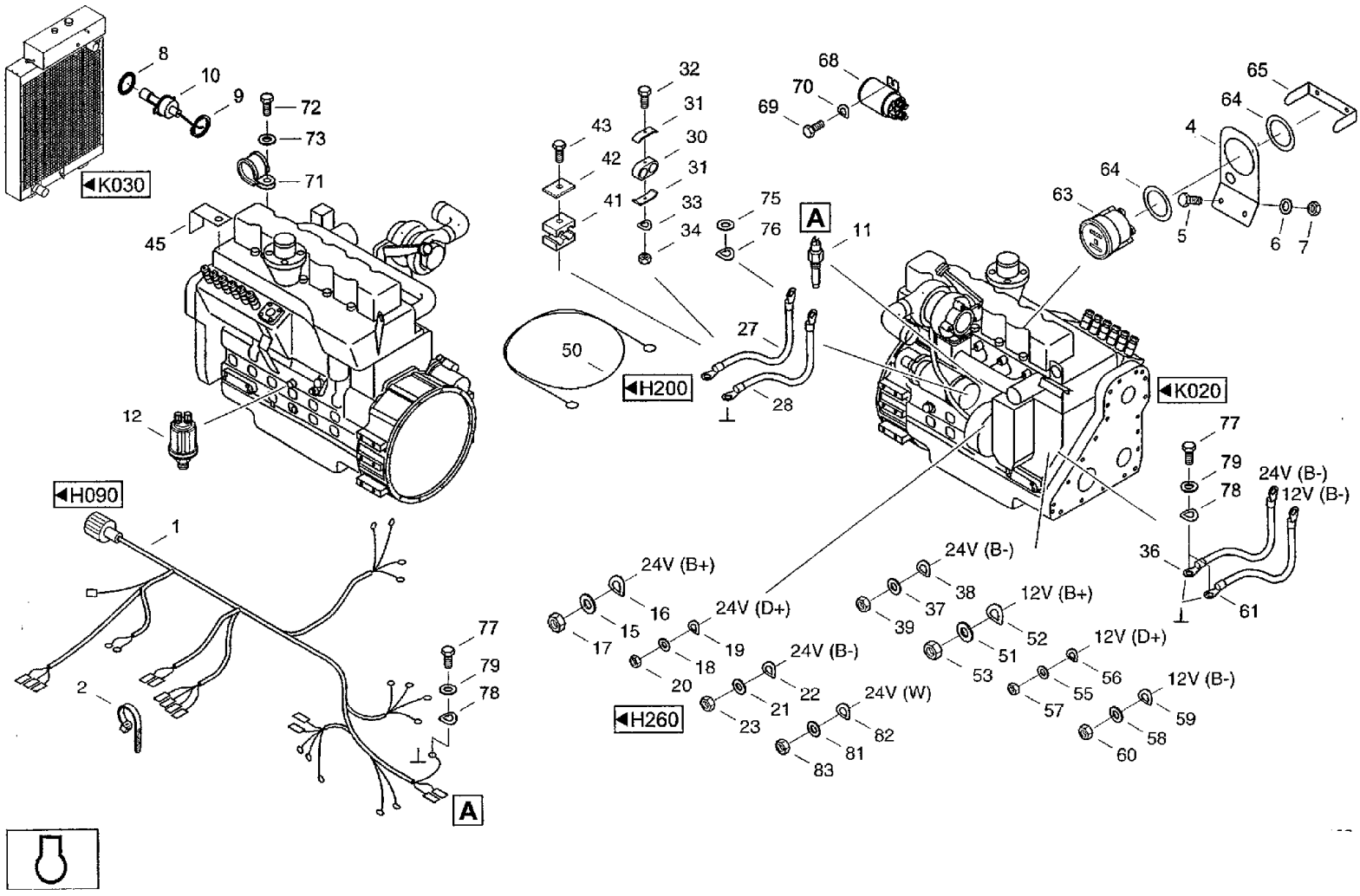
K030
H090
H200
H260
K020
A
24V (B+)
24V (D+)
24V (B-)
24V (W)
12V (B+)
12V (D+)
12V (B-)

CF80 CASE IH CROSS FLOW COMBINE

K140(02) ENGINE- ELECTRICAL EQUIPMENT

Ref	Part Number	Qty	Description
33	06501397	3	WASHER, SPRING, Wave washer spring B6DIN137FST
34	832-46406	3	NUT, LOCK, M6 x 1, Cl 8,
36	07080978	1	CABLE ASSY., Line B-/L=350
37	895-11006	1	WASHER, M6, Washer 6.4DIN125ST
38	06501397	1	WASHER, SPRING, Wave washer spring B6DIN137FST
39	825-1406	1	NUT, M6, Cl 8,
41	060505418	1	CIRCLIP, Clamp body 214/14 PP
42	06647565	1	COVER, Cover plate Z-DP-2DIN3015W1
43	060505426	1	SCREW, External hexagon screw B2 AS-2D
45	31288244	1	ANGLE BAR, Angle
50	07078436	1	HARNESS, Line B+
51	895-11008	1	WASHER, M8 x 16 x 1.6, Washer 8,4 DIN125 ST
52	06501380	1	WASHER, CUP, Wave washer spring B8 DIN137 FST
53	825-1408	1	NUT, M8, Cl 8,
55	895-11004	1	WASHER, M4, Washer 4.3DIN125ST
56	06501268	1	WASHER, SPRING, Wave washer spring B4 DIN 137 FST
57	825-1404	1	NUT, M4, Cl 8,
58	895-11006	1	WASHER, M6, Washer 6.4DIN125ST
59	06501397	1	WASHER, SPRING, Wave washer spring B6 DIN 137 FST
60	825-1406	1	NUT, M6, Cl 8,
61	061052606	1	CABLE, Line B-
63	003785167	1	HOURMETER, Hour meter ER B2 03. 1007 (MOTO
64	060506025	1	HOLDER, Dampening part holder
65	31321013	1	BOW, Clip
68	003790010	1	RELAY, 24V

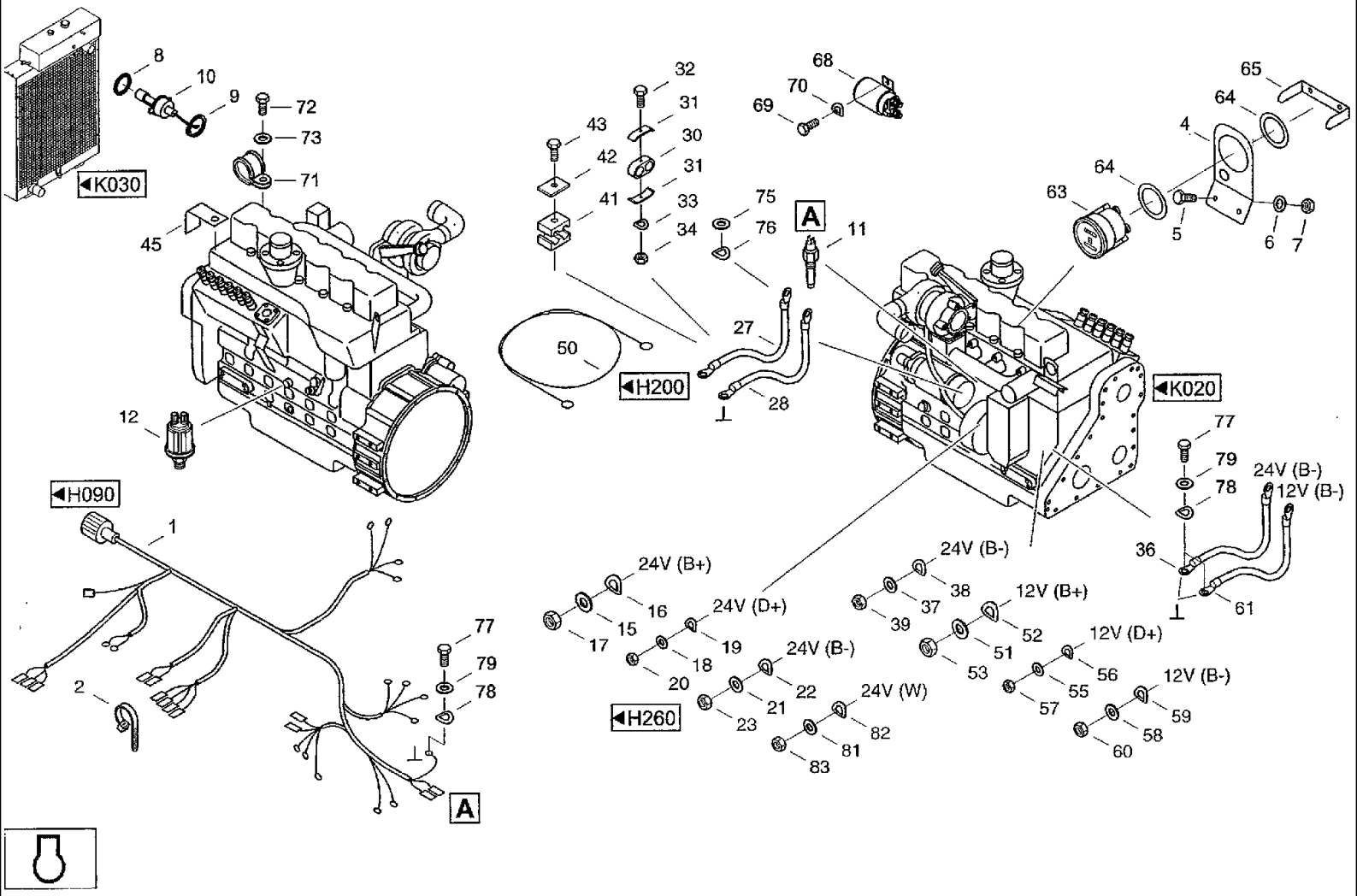
K030
8
10
9
72
73
71
45
12
H090
1
2
77
79
78
A
32
31
30
31
33
34
43
42
41
68
70
69
75
76
A
11
50
H200
27
28
65
64
4
64
63
5
6
7
K020
77
79
78
24V (B-)
12V (B-)
36
61
24V (B+)
16
15
17
24V (D+)
19
18
20
24V (B-)
22
21
23
H260
24V (B-)
38
37
39
12V (B+)
52
51
53
12V (D+)
56
55
57
12V (B-)
59
58
60
24V (W)
82
81
83

CF80 CASE IH CROSS FLOW COMBINE

K140(03) ENGINE- ELECTRICAL EQUIPMENT

Ref	Part Number	Qty	Description
69	614-5012	2	SCREW, Hex, M5 x 12, 8.8, Full Thd, Hex bolt M5x12ISO40178.8
70	06501315	2	WASHER, SPRING, Wave washer spring B5 DIN 137 FST
71	060521723	1	CLAMP, Pipe clip D1-25x20W5 DIN3016
72	614-8025	1	BOLT, Hex, M8 x 25, 8.8,
73	03020206	1	WASHER, Washer A8.4 DIN125 140HV
75	03020214	4	WASHER, Washer A13 DIN 125 140HV
76	97022151	1	WASHER, SPRING, Wave washer spring B12 DIN 137 FST
77	614-8016	2	BOLT, Hex, M8 x 16, 8.8,
78	06501380	2	WASHER, CUP, Wave washer spring B8 DIN 137 FST
79	895-11008	2	WASHER, M8 x 16 x 1.6, Washer 8.4DIN125ST
81	895-11005	1	WASHER, M5 x 10 x 1, Washer 5.3D1N125ST
82	06501315	1	WASHER, SPRING, Wave washer spring B5DIN137FST
83	825-1405	1	NUT, M5, Cl 8, Hex nut M5 ISO4032 8

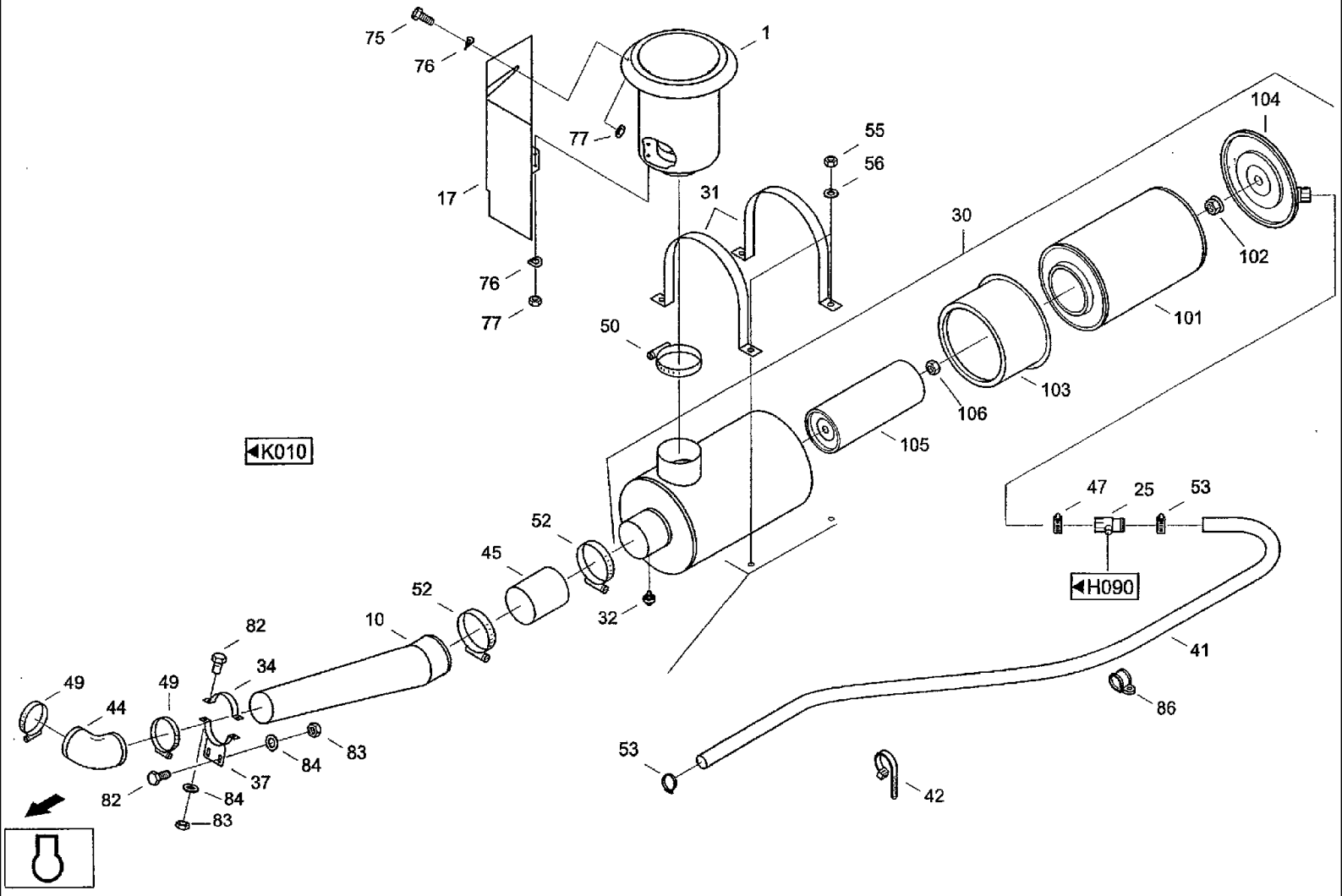
75
76
1
77
55
56
17
31
30
104
102
76
77
50
101
103
106
105
K010
47
25
53
H090
52
45
52
10
32
41
82
34
49
49
44
86
53
42
84
83
37
82
84
83

CF80 CASE IH CROSS FLOW COMBINE

K180(01) ENGINE- AIR FILTER SYSTEM

Ref	Part Number	Qty	Description
1	061014963	1	FILTER, Strainer
10	061076453	1	PIPE, SUCTION, Air intake line
17	31289710	1	DEFLECTOR, Deflector к018-03,00.000 отклонитель
25	060180526	1	SUPPORT, Adapter
30	060533116	1	AIR CLEANER, Dry air filter
31	060503658	2	RETAINER, Support к08-04.00.000 держатель
32	003792808	1	SWITCH, Maintenance switch
34	31300564	1	STIRRUP, Bracket
37	31300548	1	BAIL, Bail
41	061015056	1	HOSE, Ejector hose
42	060509124	2	CABLE, Cable band PLT-3H-30
44	060204166	1	ELBOW, Manifold 39500 25 999
45	061015048	1	SLEEVE, TRANSMISSION, Sleeve
47	060508340	1	CLAMP, Pipe clip G1-45X20W1-1 DIN3016
49	06623398	2	CLAMP, Hose clip AL100-120-W2-1 DIN3017
50	060503666	1	CLAMP, Pipe clip G1-135x30W1-1 DIN3016
52	06659118	2	CLAMP, Hose clip AS130-150DIN3017W2-1
53	06659167	2	CLAMP, Hose clip AL40-60DIN3017W2-1
55	825-1412	4	NUT, M12, Cl 8, Hex nut M12ISO40328
56	06577011	4	PLATE, LOCKING, Locking washer M12
75	614-6012	1	BOLT, Hex, M6 x 12, 8.8, Hex bolt M6x12 ISO4017 8.8
76	06501397	3	WASHER, SPRING, Wave washer spring B6 DIN137 FST
77	825-1406	3	NUT, M6, Cl 8,
82	614-8020	4	BOLT, Hex, M8 x 20, 8.8, Hex bolt M8x20 ISO4017 8.8
83	825-1408	4	NUT, M8, Cl 8,
84		2	0605036585-01 прокладка

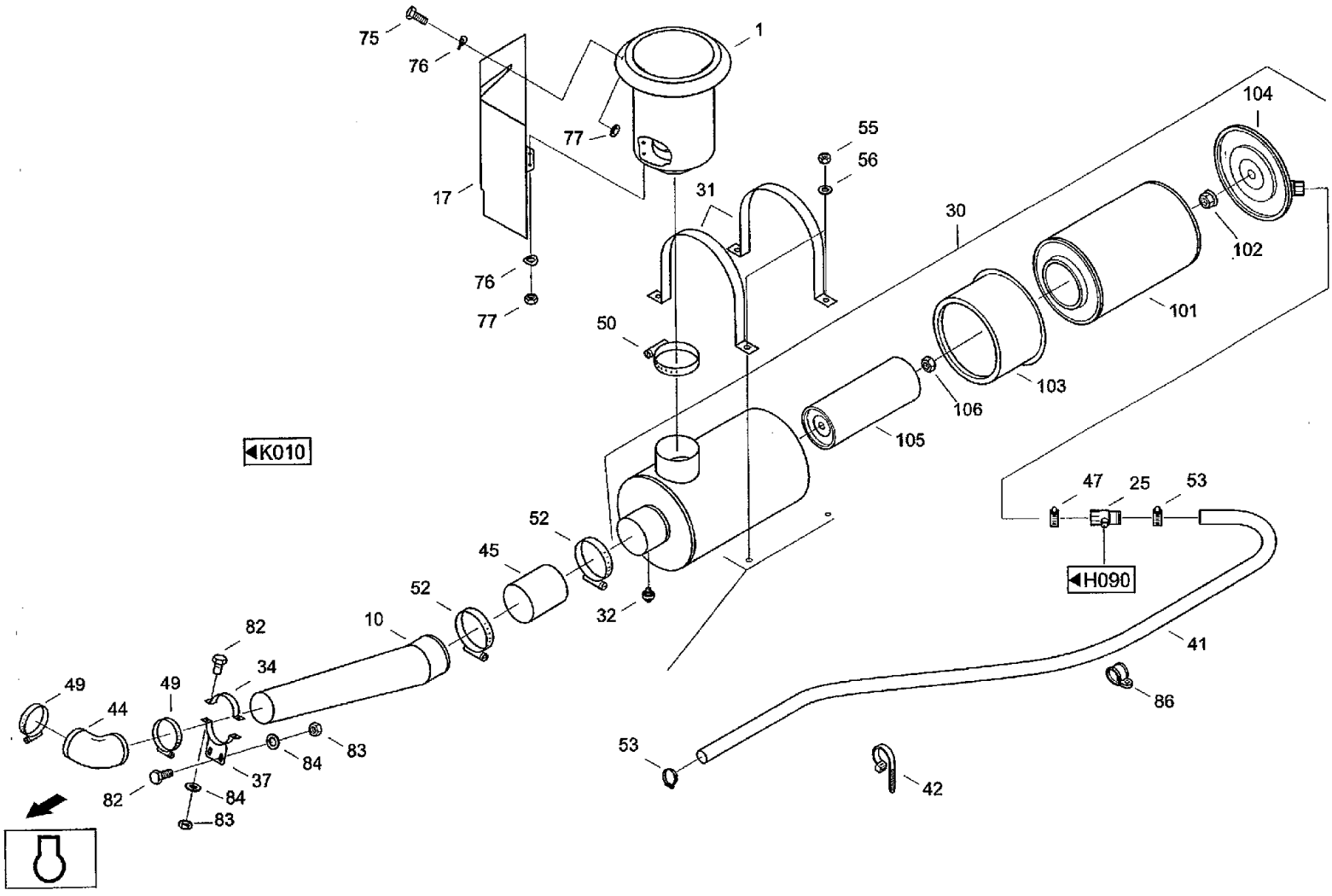
75
76
1
77
55
56
17
31
30
104
102
76
77
50
101
103
106
105
K010
47
25
53
H090
52
45
52
32
10
82
34
41
49
49
44
86
53
42
84
83
37
82
84
83

CF80 CASE IH CROSS FLOW COMBINE

K180(02) ENGINE- AIR FILTER SYSTEM

Ref	Part Number	Qty	Description
84	06577028	4	WASHER, SPECIAL, Locking washer M8
86	060503674	1	CLAMP, Pipe clip 46DIN1596
101	060503834	1	CARTRIDGE, Filter cartridge C24650/1
102	060150168	1	NUT, Flange nut
103	060503842	1	LINE, Guide machinery 29
104	060503850	1	BOTTOM, Floor VSTB2017771
105	060533124	1	AIR CLEANER, Secondary element CF 1300 45 65055 149
106	829-23416	1	NUT, Thin, M16 x 1.5, Cl 05, Hex nut M16x1,5ISO867505

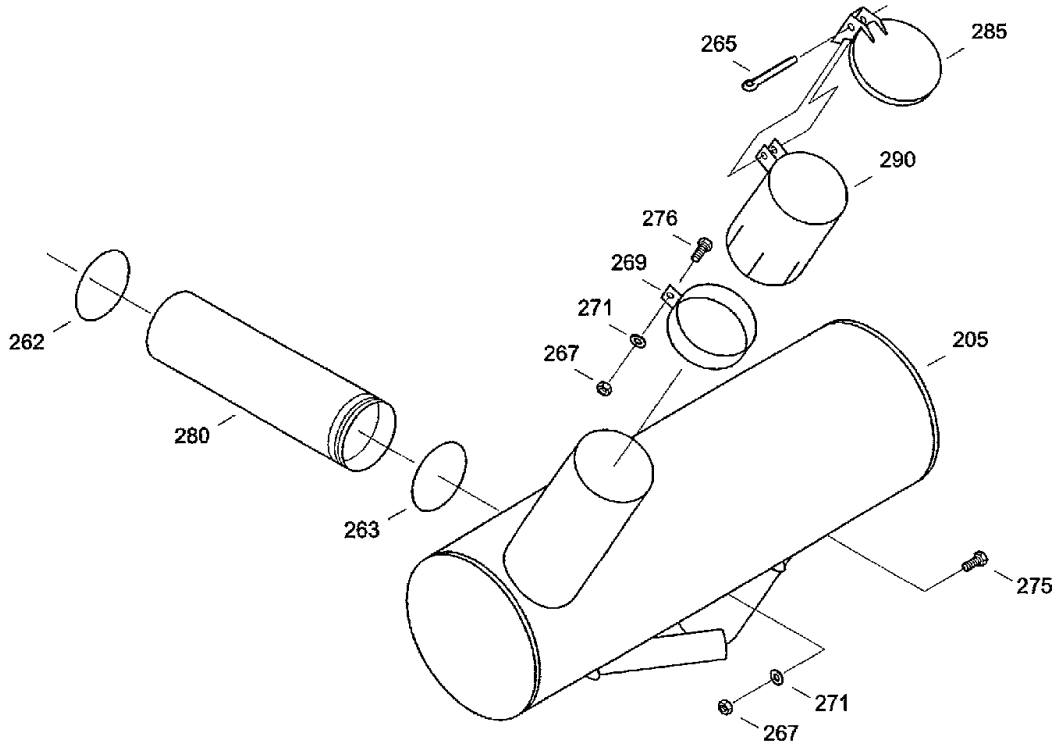

◀K010

CF80 CASE IH CROSS FLOW COMBINE

K200 ENGINE- EXHAUST SYSTEM

Ref	Part Number	Qty	Description
205	31316282	1	MUFFLER, Exhaust silencer
262	003792174	1	BUSHING, LARGE, Rectangular ring 95X3DIN34110
263	060517727	1	BUSHING, LARGE, Ring 105X3DIN34110
265	733-6340	1	PIN, SPLIT (COTTER), M6.3 x 40, Splint pin 6,3x40 DIN94 ST
267	825-1410	5	NUT, M10, Cl 8,
269	02853051	1	CLAMP, Pipe clip 114,5 DIN71555
271	06577003	5	WASHER, SPECIAL, Locking washer M10
275	614-10025	4	BOLT, Hex, M10 x 25, 8.8, Full Thd, Hex bolt M10X25IS040178.8
276	614-10030	1	BOLT, Hex, M10 x 30, 8.8,
280	31303132	1	FITTING, Connection hose
285	072019266	1	COVER, Cover
290	31315980	1	KNOCKER, End pipe
300		1	к020.01.000 колено присоединения
310		1	к020-04.00.000 колено глушителя
320		1	к020-05.00.000 переходник
330		1	к020-09.00.000 гофра
340		1	ям-55707:400 глушитель в сб.
350		1	4270718682A эжектор
360		2	ям-50207:161 уплотнение
370		1	ям-50207:160 уплотнение

CF80 CASE IH CROSS FLOW COMBINE

K240 ENGINE- COWLING

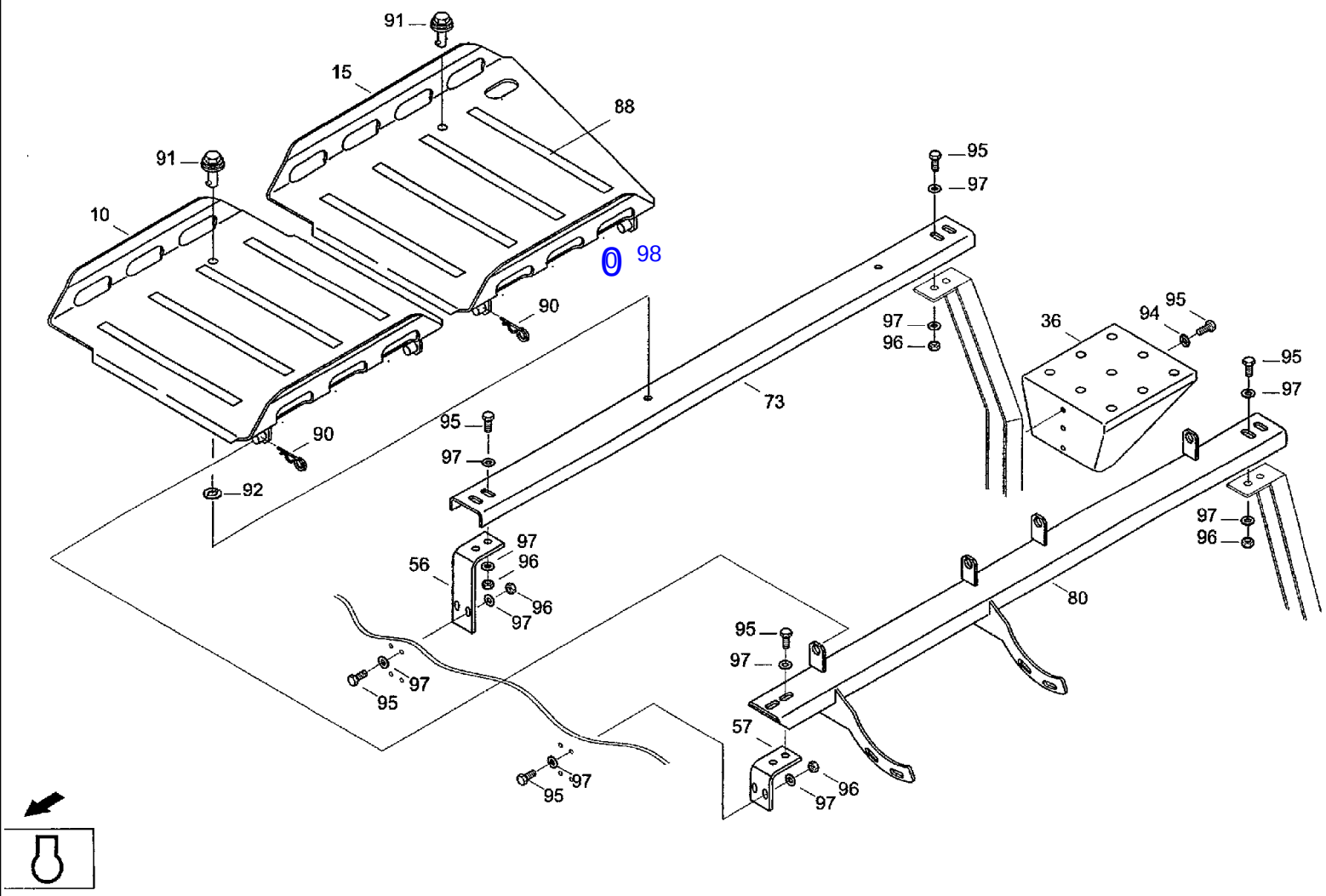

CF80 CASE IH CROSS FLOW COMBINE

K240 ENGINE- COWLING

Ref	Part Number	Qty	Description
10	31302404	1	COVER, PROTECTIVE, Cover к024-01.00.000 крышка
15	31302420	1	COVER, PROTECTIVE, Cover к024-02.00.000 крышка
36	31302478	1	STEP, Stage 528-50208:036/02 ступенька
56	31334508	1	ANGLE, Support к024-00.00.001 уголок
57	31334516	1	ANGLE, Support к024-00.00.002 уголок
73	31333982	1	SUPPORT, Support к024-03.00.000 опора
80	31302494	1	SUPPORT, Support к024-04.00.000 опора
88	01444391	8	LINING, Anti chute lining 25x440 GOSCHU
90	06708843	2	SPLIT PIN/SAFETY PIN, Spring clip 4 DIN 11 024 ST
91	060515950	2	PIN, LARGE, Closing bolt
92	03427516	2	DISC, Holding disk 800-VH-NA
94	614-8020	3	BOLT, Hex, M8 x 20, 8.8, Hex bolt M8x20 ISO4017 8.8
95	614-8025	12	BOLT, Hex, M8 x 25, 8.8,
96	825-1408	10	NUT, M8, Cl 8,
97	06577044	25	WASHER, SPECIAL, Locking washer B8
98		4	спр-13.00.04 шайба

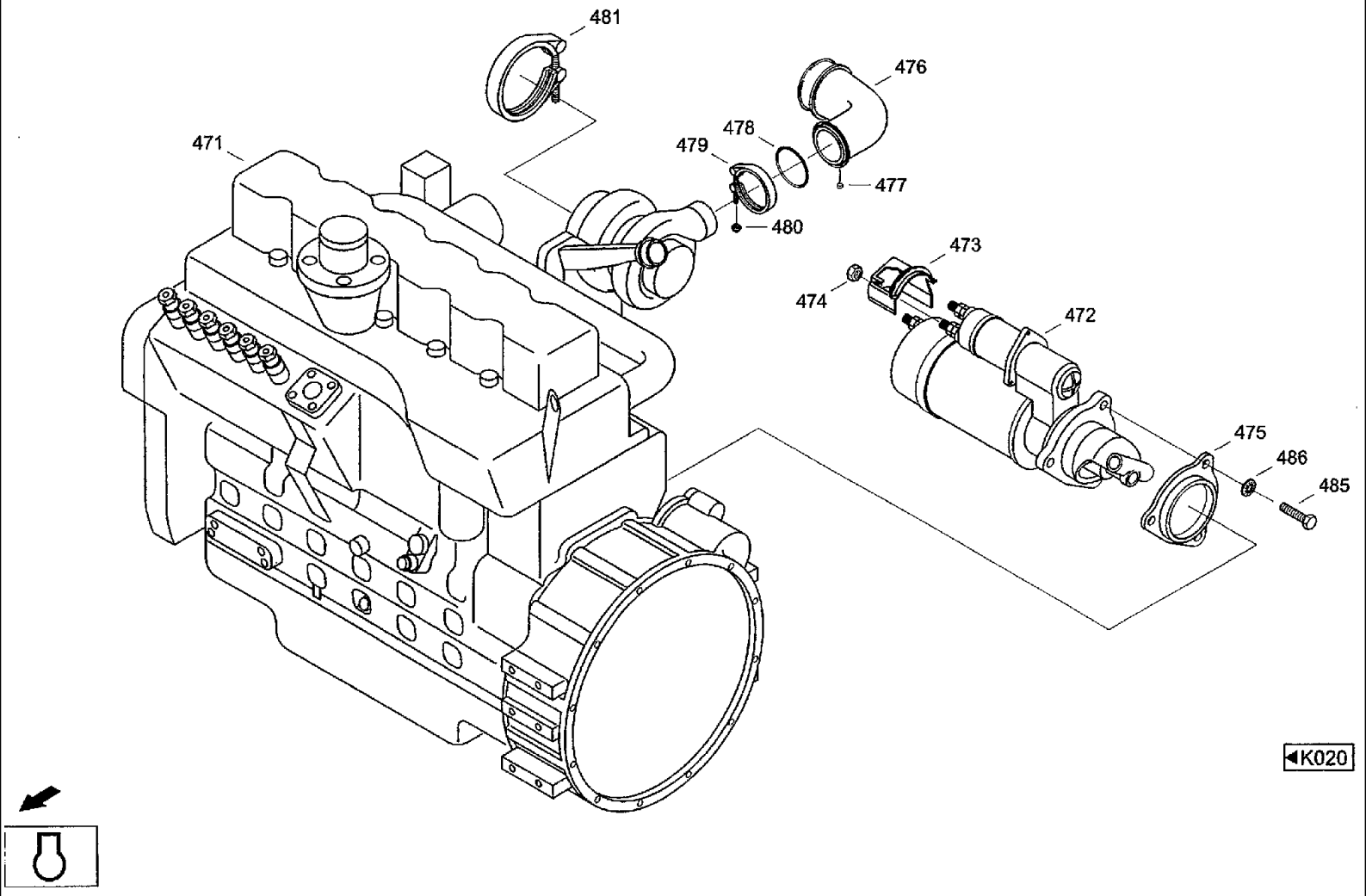
481
476
471
478
479
477
480
473
474
472
475
486
485
K020

CF80 CASE IH CROSS FLOW COMBINE

K260 ENGINE

Ref	Part Number	Qty	Description
471	02059405	1	ENGINE ASSY, Diesel engine 6CTAA-830(300HP) CDC
472	31333941	1	MOTOR, STARTER, Starter
473	31333958	1	SHIELD, Guard
474	225-14210	1	NUT, #10-32, Hex nut 10-32 UNF
475	31333966	1	NUT, SPECIAL, Intermediate flange
476	31328936	1	PIPE, EXHAUST SYSTEM, Air shaft
477	31328911	1	PLUG, Closure
478	31328928	1	SEAL, O-ring 60x2.62 VITON
479	31328952	1	COLLAR CLAMP, Clamp
480	31328944	1	NUT, LOCK, Nut 1/4ZOLL 28UNF-ST
481	02059390	1	CLAMP, Clamp 1 CLAMP V-BA.3905216 OPTION
485	614-12050	3	BOLT, Hex, M12 x 50, 8.8, Full Thd, Hex bolt M12x50ISO40178.8
486	06577011	3	PLATE, LOCKING, Locking washer M12

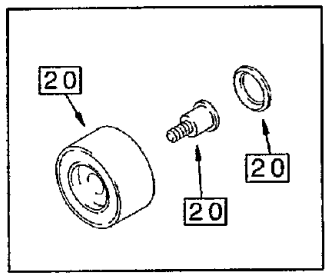
20
20
20

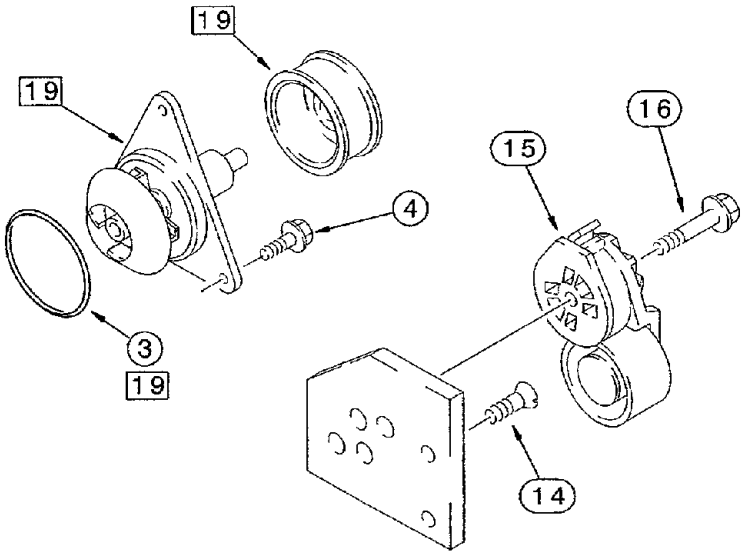
19
19
16
15
4
3
19
14

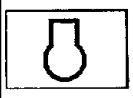

CF80 CASE IH CROSS FLOW COMBINE

K270 ENGINE- WATER PUMP

Ref	Part Number	Qty	Description
3	J902089	1	SEAL, O-ring
4	3934054	3	Bolt M8x28
14	845-8025	2	SCREW, Hex Flg, M8 x 25, 8.8, Hex bolt M8x25 BM-042 8.8-PHC
15	J934817	1	TENSIONER, Tensioner SATZ
16	854-10075	1	BOLT, Hex Flg, M10 x 75, 10.9, Hex bolt M 10x75
19	J802975	1	PUMP, WATER, Water pump SATZ
20	A77817	1	PACKAGE, REPAIR, Tensioner k

K280 ENGINE- GEARBOX COVER, FRONT

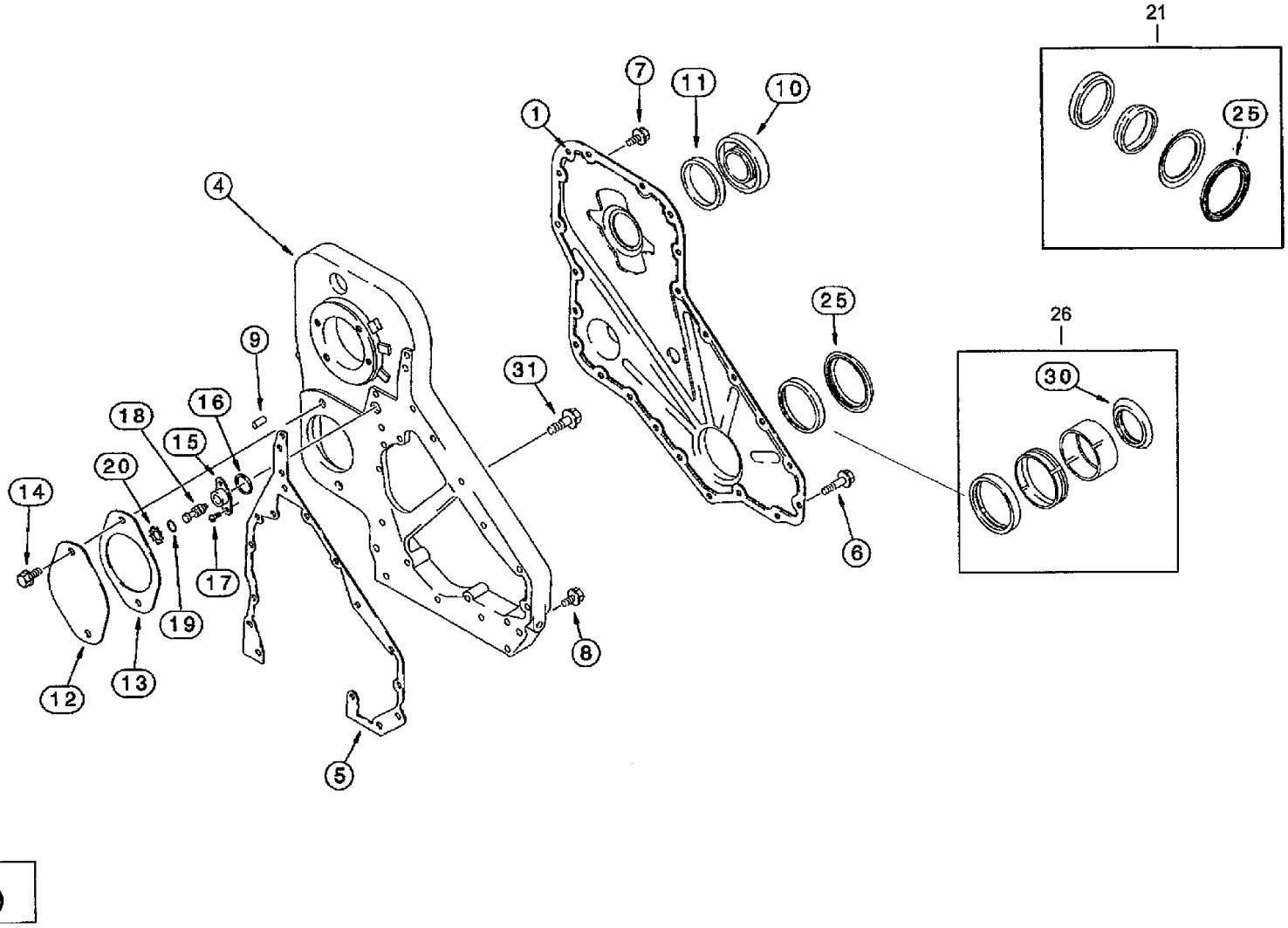

CF80 CASE IH CROSS FLOW COMBINE

K280 ENGINE- GEARBOX COVER, FRONT

Ref	Part Number	Qty	Description
1	J926838	1	COVER ASSY, Cover
4	J929555	1	TRANSMISSION HOUSING, Housing
5	J929253	1	GASKET, Seal F.GEHAUSE
6	J926863	6	BOLT, Flange bolt M8x50
7	J924962	17	BOLT, Flange bolt M8x16
8	J926846	5	BOLT, Flange bolt M8x20
9	J900257	2	PIN, Bolt 16mm
10	J903463	1	COVER, Cover
11	J903475	1	SEAL, Seal
12	J914868	1	COVER, Cap
13	J931608	1	GASKET, Seal F.DECKEL
14	854-12025	2	BOLT, Hex Flg, M12 x 25, 10.9, Hex bolt M 12x25
15	J919683	1	HOUSING, Housing
16	J915772	1	SEALRING, Seal
17	J907998	2	SCREW, Screw M5x17
18	J903924	1	PIN, Bolt
19	J913994	1	O-RING, O-ring
20	100-2587	1	RING, SNAP, 0.875", Int, #87, O-ring 0.804 'xO.078""
21	A77790	1	KIT, SEALS, Seal kit F.KURBELWELLE VORN
25	J918113	1	SHIELD, Shield
26	A77808	1	KIT, SERVICE, Sleeve kit F.KURBELWELLEVORN
30	J924987	1	SHIELD, Shield
31	854-12050	4	BOLT, Hex Flg, M12 x 50, 10.9, Hex bolt M12x50

K290 ENGINE- CPL. PIPE

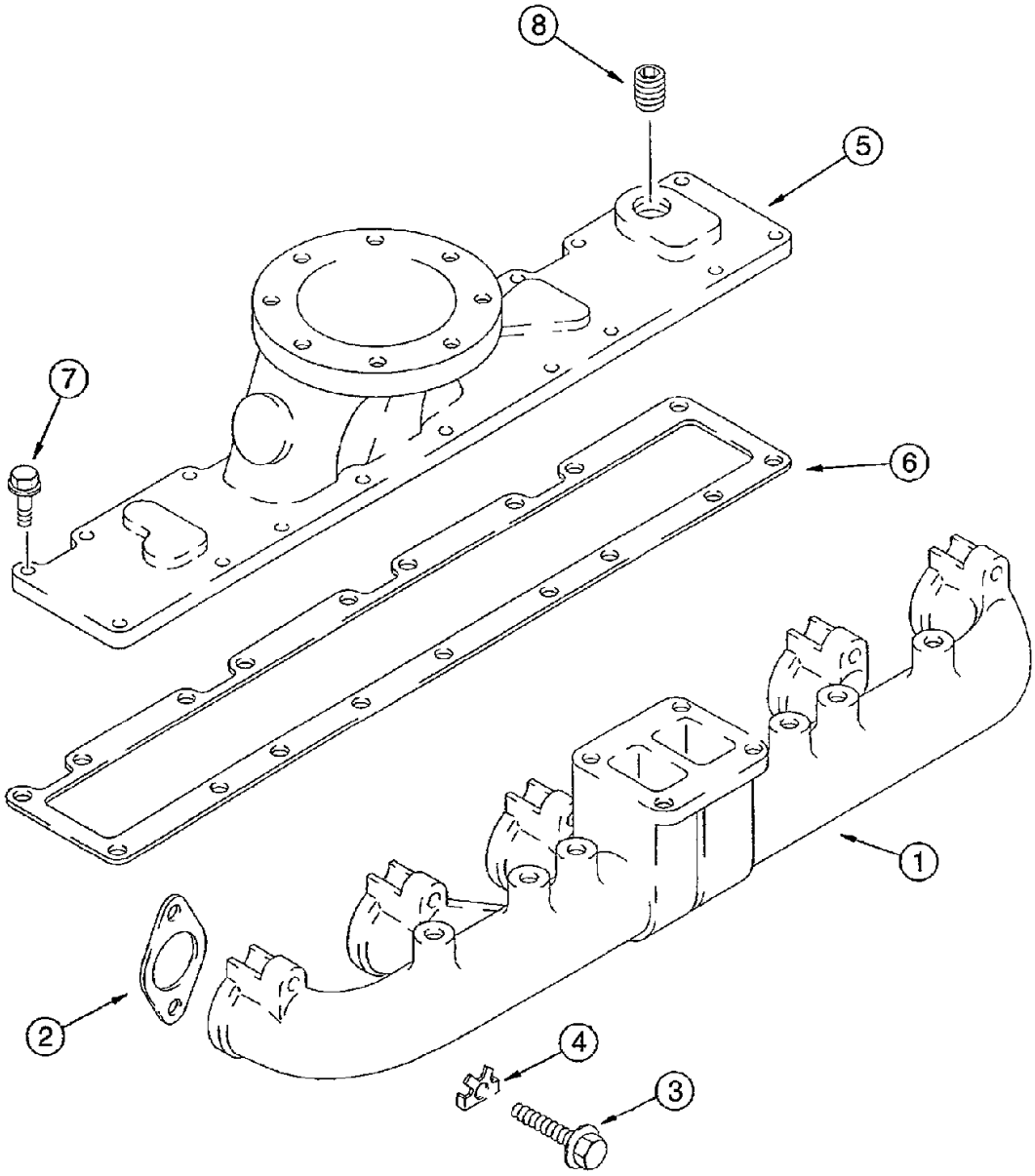

CF80 CASE IH CROSS FLOW COMBINE

K290 ENGINE- CPL. PIPE

Ref	Part Number	Qty	Description
1	J932180	1	MANIFOLD, Manifold
2	J932063	6	GASKET, MANIFOLD, Seal F.KRUMMER
3	J929537	12	BOLT, Bolt
4	J914708	12	PLATE, LOCKING, Plate
5	J926044	1	COVER, Cover
6	J914311	1	GASKET, Seal F.VERTEILER
7	844-8030	18	BOLT, Hex Flg, M8 x 30, 8.8, Full Thd, Hex bolt M8x30
8	A77429	1	PLUG, Plug 1/2 PT

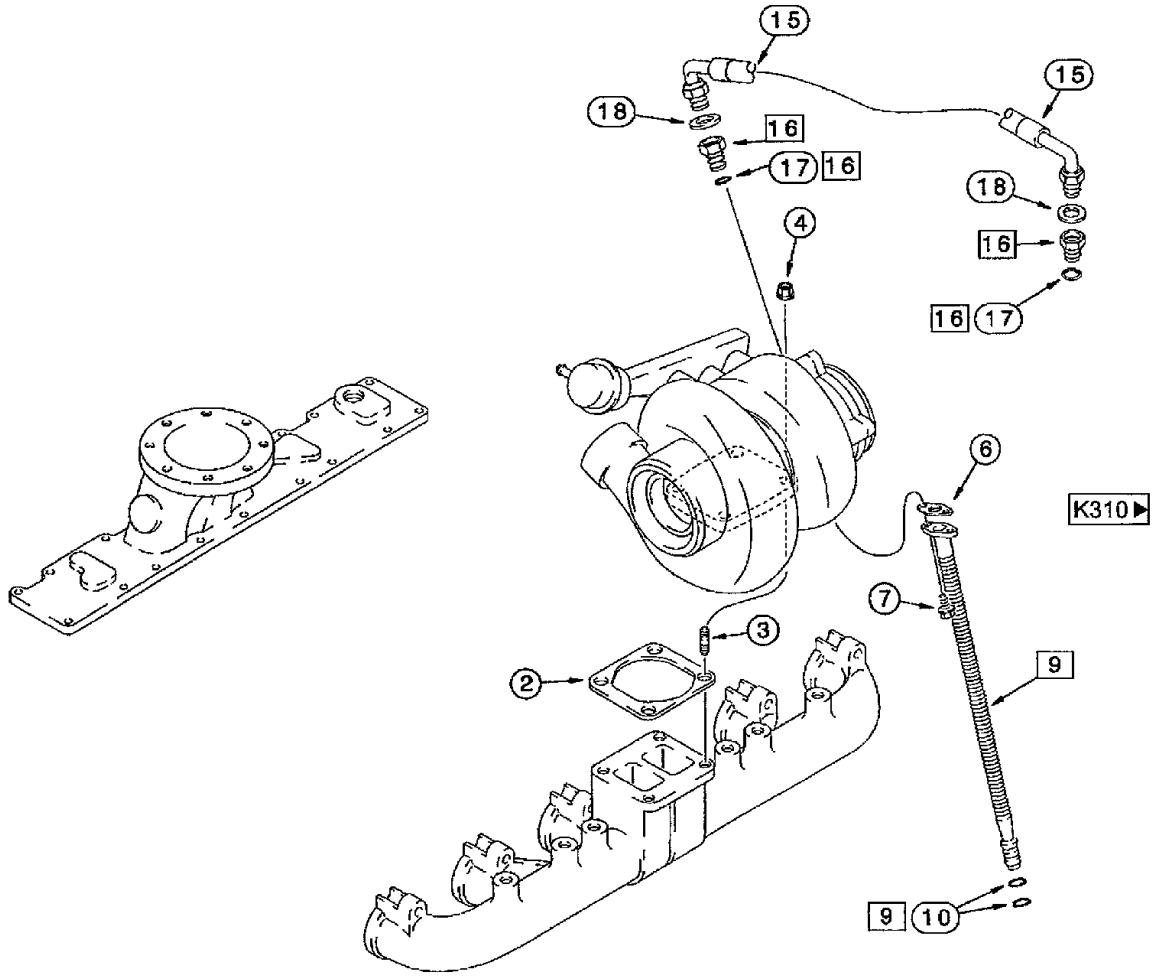
15
15
18
16
17
16
18
16
16
17
4
6
K310▶
7
3
9
2
9
10

CF80 CASE IH CROSS FLOW COMBINE

K300 ENGINE- TURBOCHARGER, VARIOUS COMPONENTS

Ref	Part Number	Qty	Description
2	J911941	1	GASKET, Seal F.KROMMER
3	J818823	4	STUD, Stay bolt
4	J818824	4	NUT, Flange nut M10
6	J942725	11	GASKET, Seal .! '
7	844-8020	2	BOLT, Hex Flg, M8 x 20, 8.8,
9	J928629	1	TUBE, Cpl. pipe
10	238-7115	2	O-RING, -115, Cl 7, .674" ID x .103" Thk, O-ring 0.674 'xO. 103""
15	J918562	1	HOSE, Hose 538mm
16	J919687	2	CONNECTOR, Adapter k
17	238-5013	1	O-RING, -013, 70 Duro, .426" ID x .070" Thk, O-ring 0.426 'xO.070""
18	222-993	2	COPPER SEAL, 3/8 Tube, Fl, Copper, Control device 3/8'

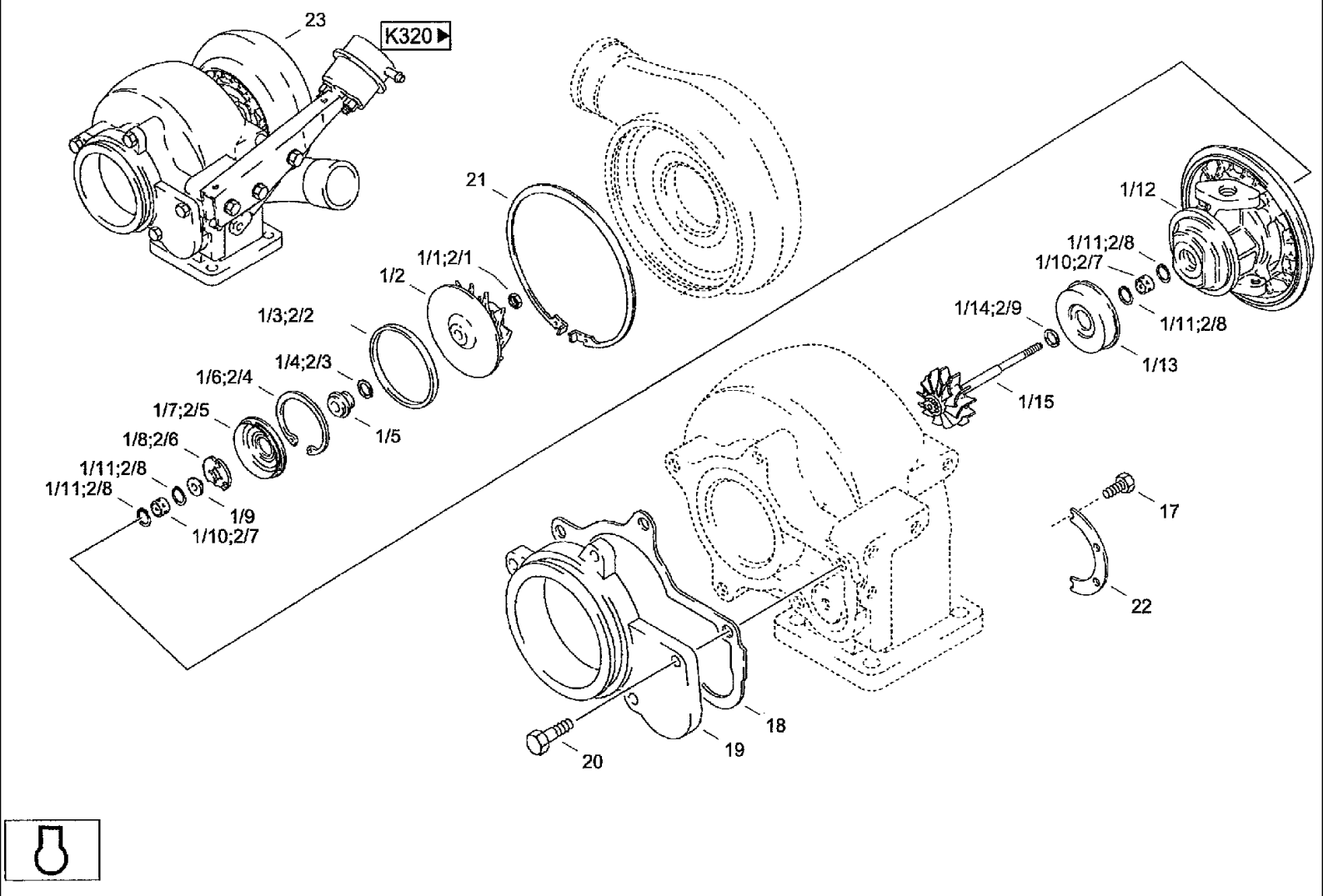
23
K320 ▶
21
1/1;2/1
1/2
1/3;2/2
1/4;2/3
1/6;2/4
1/7;2/5
1/8;2/6
1/11;2/8
1/11;2/8
1/9
1/10;2/7
1/5
1/12
1/11;2/8
1/10;2/7
1/14;2/9
1/11;2/8
1/13
1/15
17
22
18
19
20

CF80 CASE IH CROSS FLOW COMBINE

K310 ENGINE- TURBOCHARGER

Ref	Part Number	Qty	Description
1	J538379	1	HOUSING, Center housing assy k
2	J575169	1	KIT, REPAIR, Repair-kit F.TURBOLADER
17	J759917	6	SCREW, Screw
18	J535243	1	GASKET, Seal F.ADAPTER
19	J528010	1	ADAPTER, Adapter
20	614-8020	5	BOLT, Hex, M8 x 20, 8.8, Hex bolt M8x20ISO40178.8
21	J533163	1	RING, SNAP, Ring
22	J534309	2	PLATE, Plate
23	J802888	1	TURBOCHARGER, Turbocharger SATZ

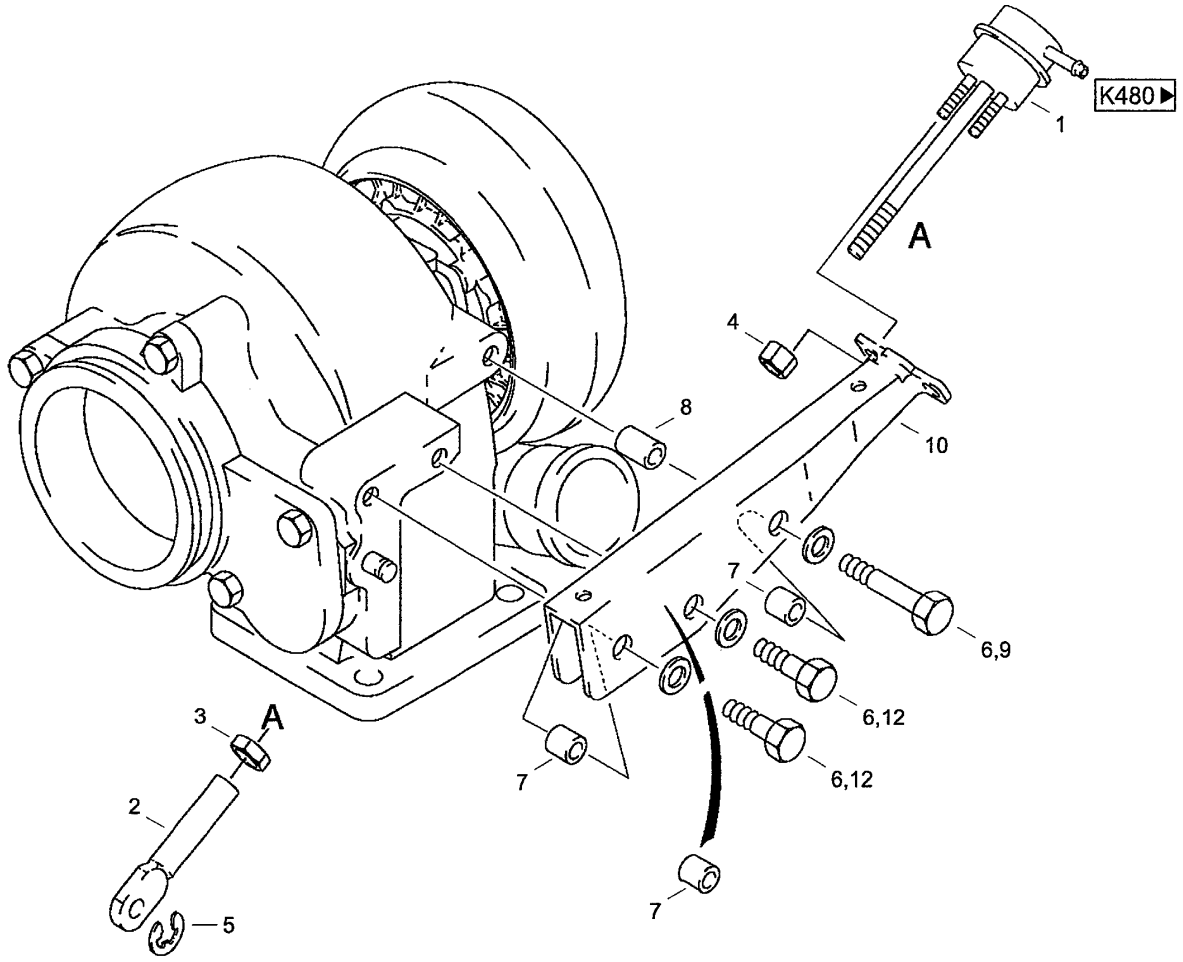
K480
1
A
4
8
10
7
6,9
6,12
6,12
3
A
2
7
7
5
K310

CF80 CASE IH CROSS FLOW COMBINE

K320 ENGINE- WASTEGATE ACTUATOR

Ref	Part Number	Qty	Description
1	J531892	1	ACTUATOR, Actuator
2	J528177	1	LINK, Link
3	425-155	1	NUT, Jam, 5/16"-24, G5, Hexagon clamping nut 5/16ZOLL-24
4	J528204	2	NUT, Lock nut
5	J528221	1	RING, SNAP, Ring
6	895-11008	3	WASHER, M8 x 16 x 1.6, Washer 8.4DIN125ST
7	J532195	3	SPACER, Spacer 13,6mm
8	J532196	1	SPACER, Spacer 19mm
9	814-8055	1	BOLT, Hex, M8 x 55, 8.8, Hex bolt M8x55 ISO4014 8.8
10	J533328	1	SUPPORT, Support
12	814-8035	2	BOLT, Hex, M8 x 35, 8.8, Hex bolt M8x35 ISO4014 8.8

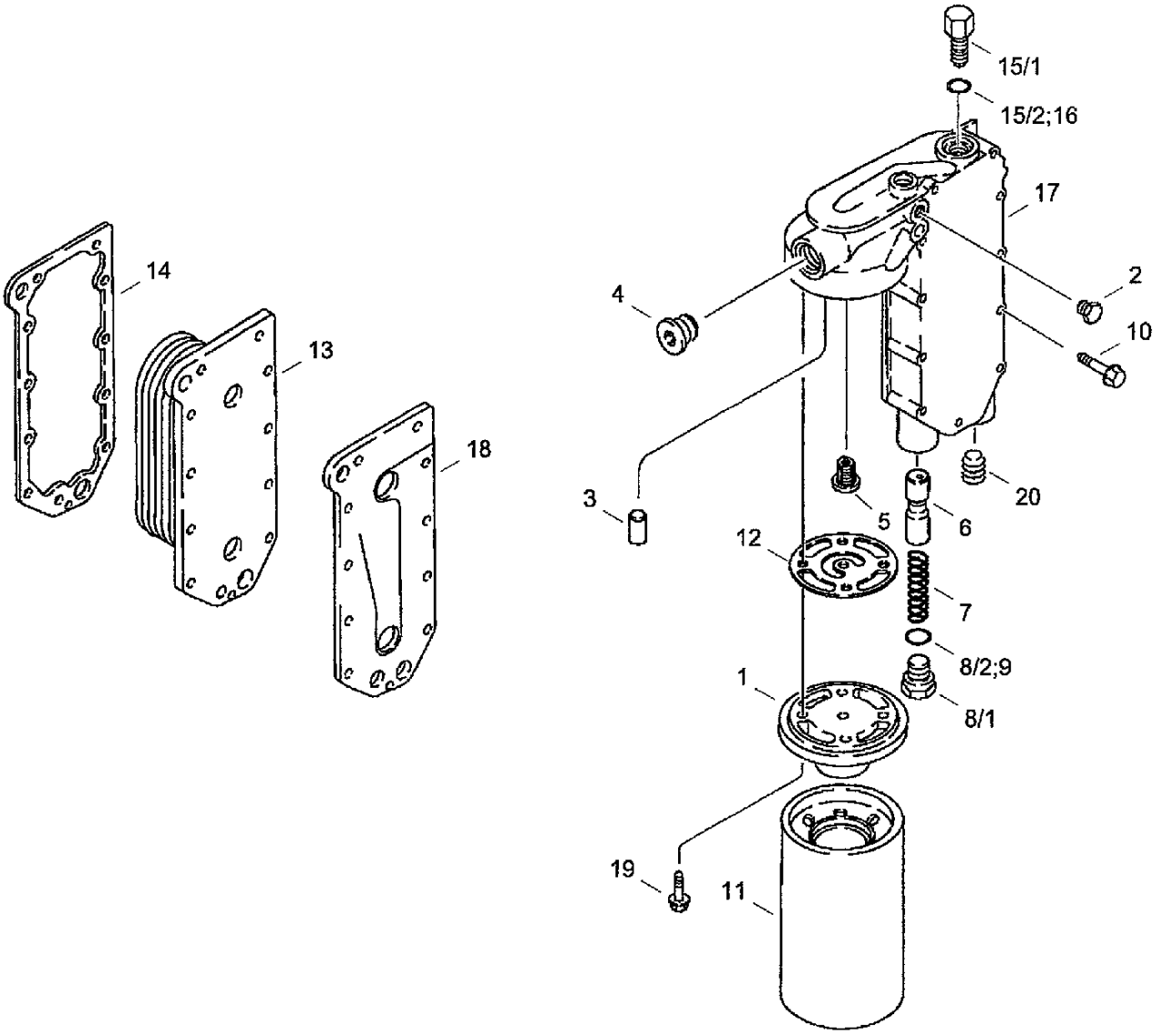
15/1
15/2;16
17
2
10
4
14
13
18
3
5
6
20
12
7
8/2;9
1
8/1
19
11

CF80 CASE IH CROSS FLOW COMBINE

K330 ENGINE- OIL FILTER, OIL COOLER

Ref	Part Number	Qty	Description
1	J918334	1	HEAD, Head
2	J906619	2	PLUG, Hex plug 1/8 PT
3	A77722	1	PIN, Bolt
4	A77505	1	PLUG, Plug 3/4 PT
5	J936365	1	VALVE, PRESSURE RELIEF, Press, relief valve
6	J945967	1	PLUNGER, Plunger
7	A77541	1	SPRING, Pressure spring
8	J931084	1	PLUG, Hex plug 24mm
9	J930911	1	O-RING, O-ring 3/4IDx1/16
10	845-8065	11	BOLT, Hex Flg, M8 x 65, 8.8, Hex bolt M8x65
11	J919562	1	FILTER, ENGINE OIL, Engine oil filter
12	J921605	1	GASKET, Seal F.SOCKEL
13	J918175	1	CORE-OIL COOLER, Core
14	J918174	1	GASKET, Seal F.KERN
15	J934410	1	VALVE, Thermostat k
16	A77724	1	O-RING, O-ring
17	J931077	1	COVER, Cover
18	J929011	1	GASKET, Seal
19	J907860	4	BOLT, Flange bolt M8x25
20	217-439	1	PLUG, Hex Soc, 1/2"-14, Closing plug 1/2ZOLL-14

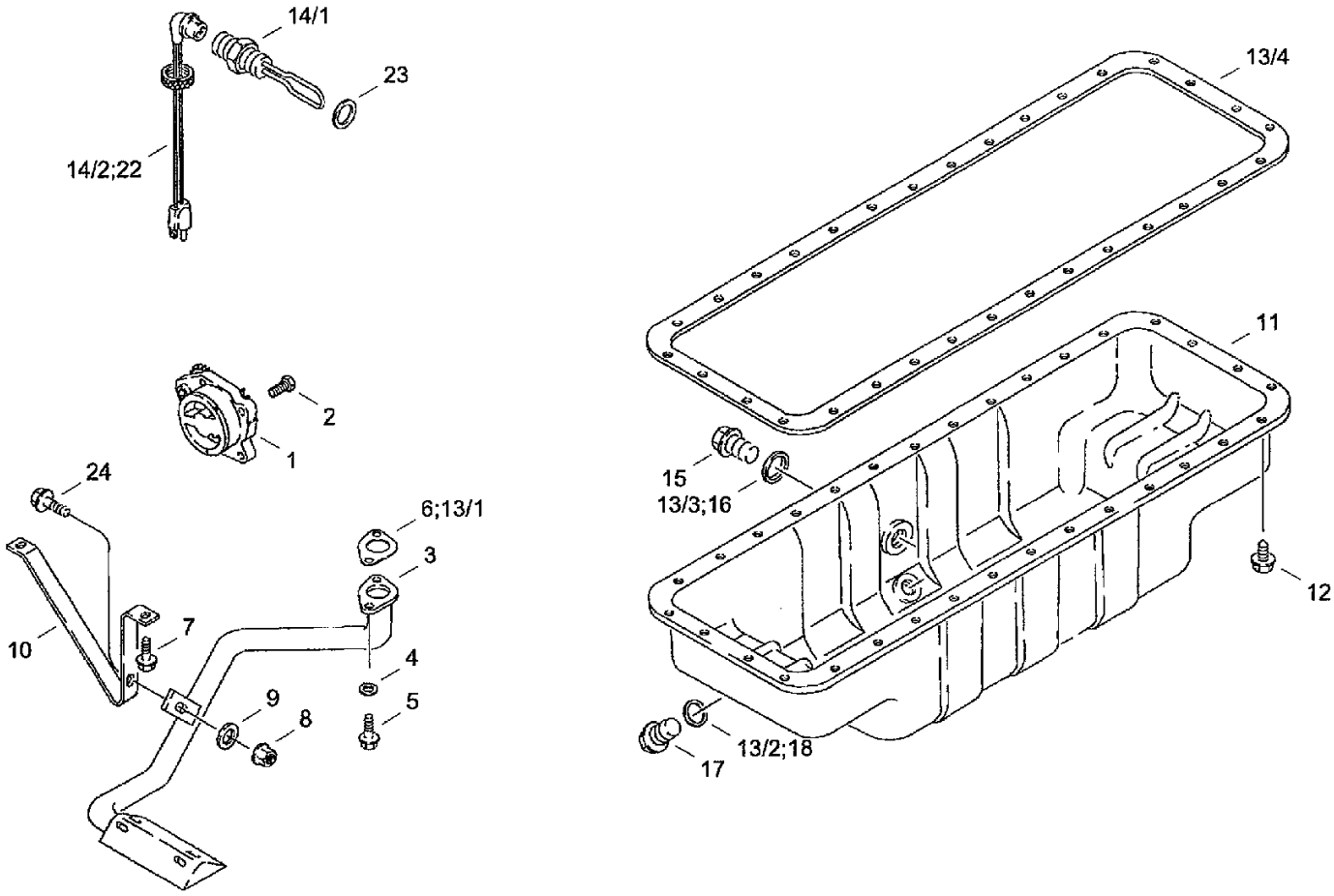
14/1
23
14/2;22
2
1
24
6;13/1
3
10
7
4
9
8
5
13/4
11
15
13/3;16
12
13/2;18
17

CF80 CASE IH CROSS FLOW COMBINE

K340 ENGINE- OIL PUMP, OIL HEATING

Ref	Part Number	Qty	Description
1	J948071	1	PUMP, Oil pump k
2	J900677	4	BOLT, Bolt M8x30
3	J921719	1	TUBE, Cpl. pipe
4	J926865	2	SPACER, Spacer
5	845-6030	2	BOLT, Hex Flg, M6 x 30, 8.8, Hex bolt M6x30
6	J914302	1	GASKET, Seal
7	845-6015	2	BOLT, Hex Flg, M6 x 15, 8.8, Full Thd, Hex bolt M6x15
8	J906216	1	NUT, Flange nut M6
9	J910960	1	WASHER, Washer
10	J927611	1	BRACE, Stay
11	J914015	1	PAN, ENGINE OIL, Oil pan
12	J920400	32	BOLT, Screw M8x25
13	A77679	1	KIT, GASKET, Seal kit
14	A77666	1	KIT, SERVICE, Heating SATZ 240V
15	J924148	1	PLUG, Hex plug M22
16	J902425	1	WASHER, Washer
17	J924147	1	PLUG, Hex plug M18
18	J920773	1	WASHER, SEALING, Washer
22	196466A1	1	CABLE, ELECTRIC, Cable 1829mm
23	J902425	1	WASHER, Washer
24	845-6020	1	BOLT, Hex Flg, M6 x 20, 8.8, Full Thd, Hex bolt M6x20

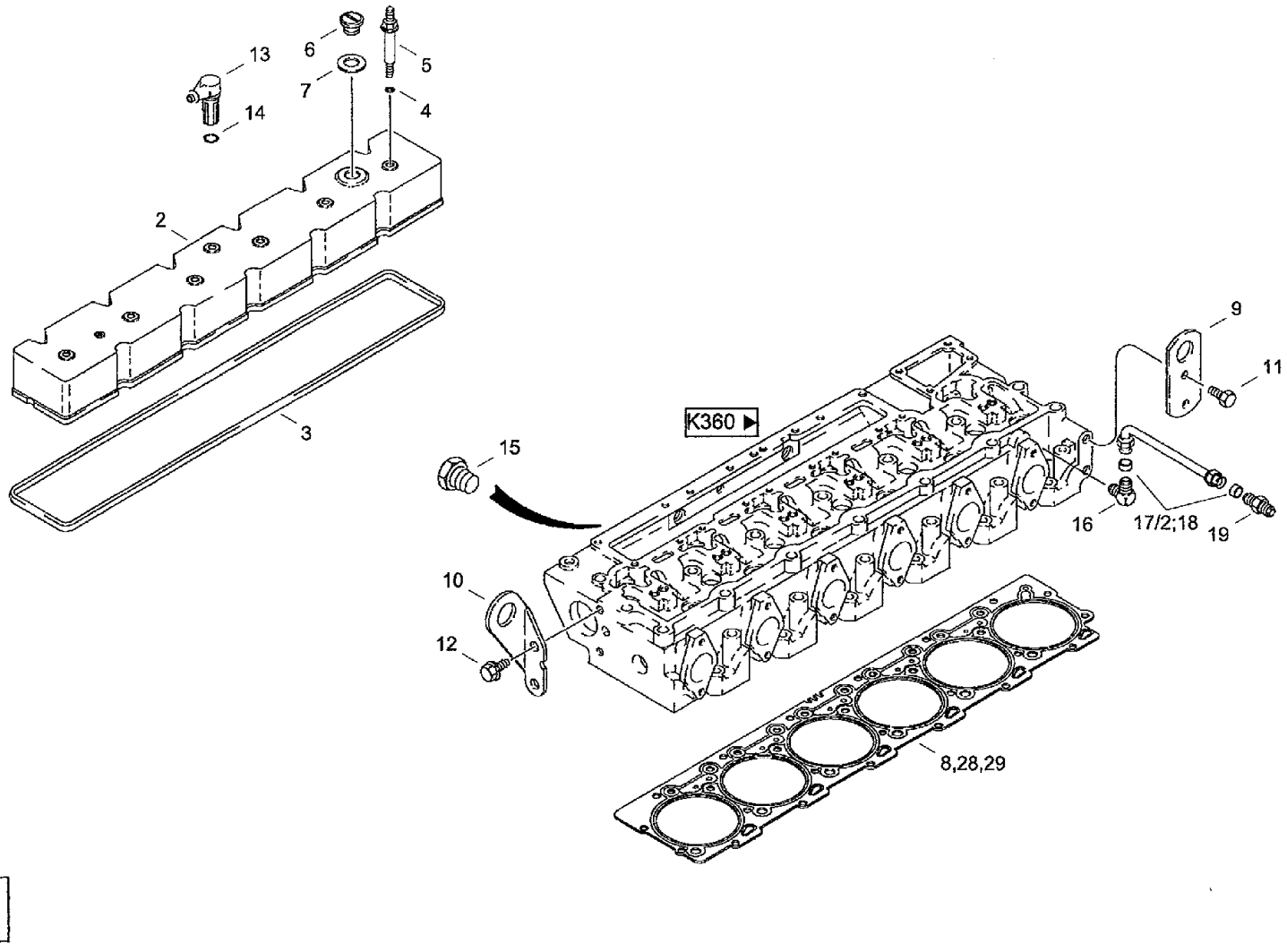
13
6
5
7
4
14
2
3
K360
15
9
11
16
17/2;18
19
10
12
8,28,29

CF80 CASE IH CROSS FLOW COMBINE

K350 ENGINE- CYLINDER HEAD, COVER

Ref	Part Number	Qty	Description
2	J930903	1	COVER, VALVE, Cover
3	J905449	1	SEAL, RUBBER, Seal
4	J910824	6	O-RING, O-ring
5	J922639	6	BOLT, Stay bolt
6	J902468	1	PLUG, Cap
7	J902466	1	SEAL, Ring
8	J935585	1	GASKET, Cyl. head gasket
9	J907861	1	BRACKET, Support
10	J906440	1	BRACKET, Support
11	614-12025	2	BOLT, Hex, M12 x 25, 8.8, Hex bolt M12x25ISO40178.8
12	854-12025	2	BOLT, Hex Flg, M12 x 25, 10.9, Hex bolt M12x25
13	J935113	1	ELBOW, Connector
14	J934865	1	SEAL, O-ring 0.674ZOLL X0.103ZOLL S-002 5
15	J906619	1	PLUG, Hex plug 1/8 PT
16	222-42	1	ELBOW, 90є, 1/2"-24 Fem x 1/8"-27 NPTF, Threaded elbow joint 1/4ZOLL
17	J924589	1	TUBE, Cpl. pipe
18	222-153	2	SLEEVE, 1/4" Tube, Sleeve 1/4ZOLL
19	222-22	1	FITTING, 1/2"-24 x 1/8" NPTF w/Nut, Adapter 1/4ZOLL
28	J935586	1	GASKET, CYLINDER HEAD, Cyl. head gasket 0,25mm
29	J935587	1	GASKET, CYLINDER HEAD, Cyl. head gasket 0,50mm

K360(01) ENGINE- CYLINDER HEAD, ROCKING LEVER

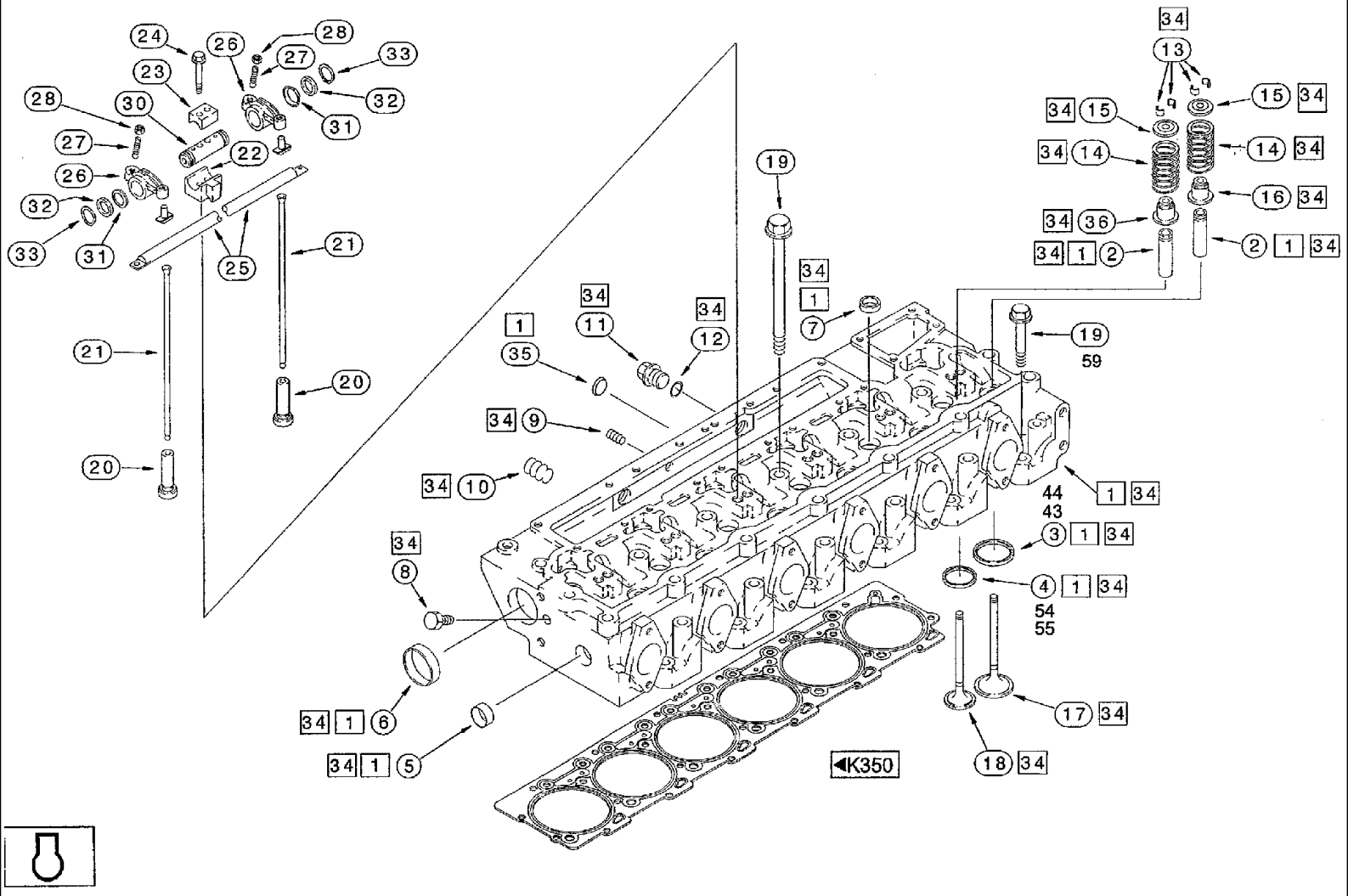

CF80 CASE IH CROSS FLOW COMBINE

K360(01) ENGINE- CYLINDER HEAD, ROCKING LEVER

Ref	Part Number	Qty	Description
1	J922587	1	CYLINDER HEAD, Head k
2	J923564	12	GUIDE, VALVE, Guide
3	J924582	6	INSERT, Insert
4	J929005	6	INSERT, Insert
5	J920443	1	PLUG, Expansion plug 30mm
6	A77782	2	PLUG, Expansion plug 58mm
7	41-1616	5	PLUG, Cup, 1", Stainless, Pot plug 1ZOLL
8	A77534	1	PLUG, Hex plug 1/16 PT
9	A77428	1	PLUG, Plug 1/4 PT
10	A77429	2	PLUG, Plug 1/2 PT
11	J924148	2	PLUG, Hex plug M22
12	J902425	2	WASHER, Washer
13	J901177	24	KEY, Retainer
14	J925272	12	SPRING, VALVE, Pressure spring
15	J925273	12	ROTATOR, Retainer
16	J915707	6	SEAL, Seal
17	J924492	6	VALVE, ENGINE, INLET, STD, Intake valve
18	J921444	6	VALVE, ENG EXHAUST, STD, Return valve
19	J917729	12	SCREW, Bolt 80mm
20	J931623	12	TAPPET, Tappet
21	J905194	12	ROD, PUSH, Rod
22	J905870	6	SUPPORT ASSY., Support
23	J901693	6	CLAMP, Clamp
24	868-10065	12	SCREW, 12 Pt Hd, M10 x 65, 12.9, Bihexagonal head bolt M 10x65
25	J919677	1	MANIFOLD, Manifold

K360(02) ENGINE- CYLINDER HEAD, ROCKING LEVER

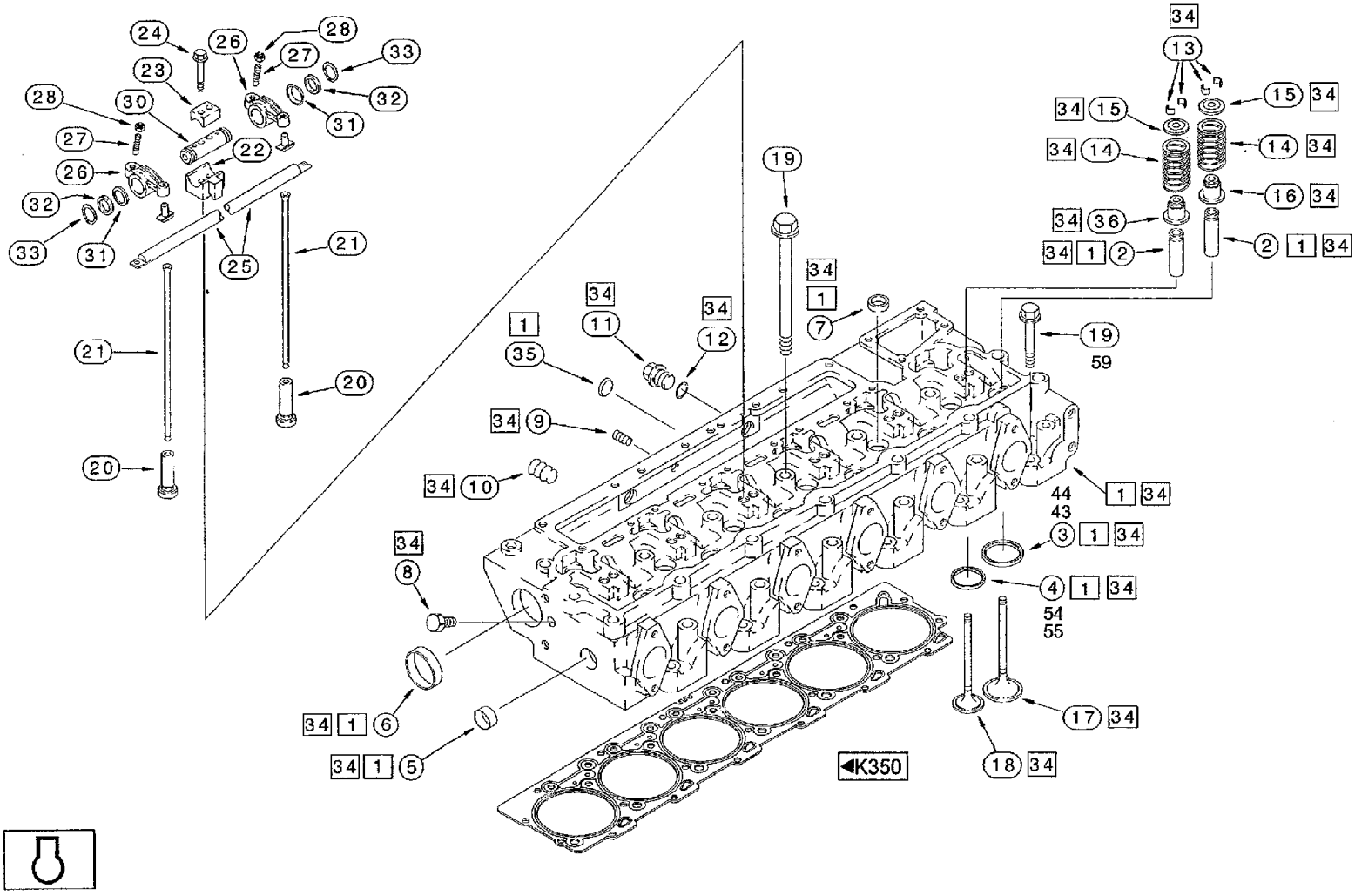

CF80 CASE IH CROSS FLOW COMBINE

K360(02) ENGINE- CYLINDER HEAD, ROCKING LEVER

Ref	Part Number	Qty	Description
26	J901717	12	ROCKER, Arm k
27	J900706	1	SCREW, Screw
28	425-116	1	NUT, 3/8"-24, G5, Hex nut 1ZOLL-14
30	J919435	6	SHAFT, Shaft
31	J906100	12	CUP, SPRING, Wave washer spring
32	J907206	12	WASHER, Washer
33	100-1187	12	RING, SNAP, #87, Ext, Ring, Snap, #87, Ext
34	J931923	1	CYLINDER HEAD, Head k
35	J912900	1	PLUG, Expansion plug 24mm
36	J927642	6	SEAL, Seal
43	J925468	6	SEAT, VALVE, Insert +0,25mm
44	J925470	6	SEAT, VALVE, Insert +0,50mm
54	J929006	6	INSERT, Insert +0,25mm
55	J929007	6	INSERT, Insert +0,50mm
59	J917728	12	BOLT, Bolt 160mm

K370 ENGINE- FILTER, WATER, THERMOSTAT

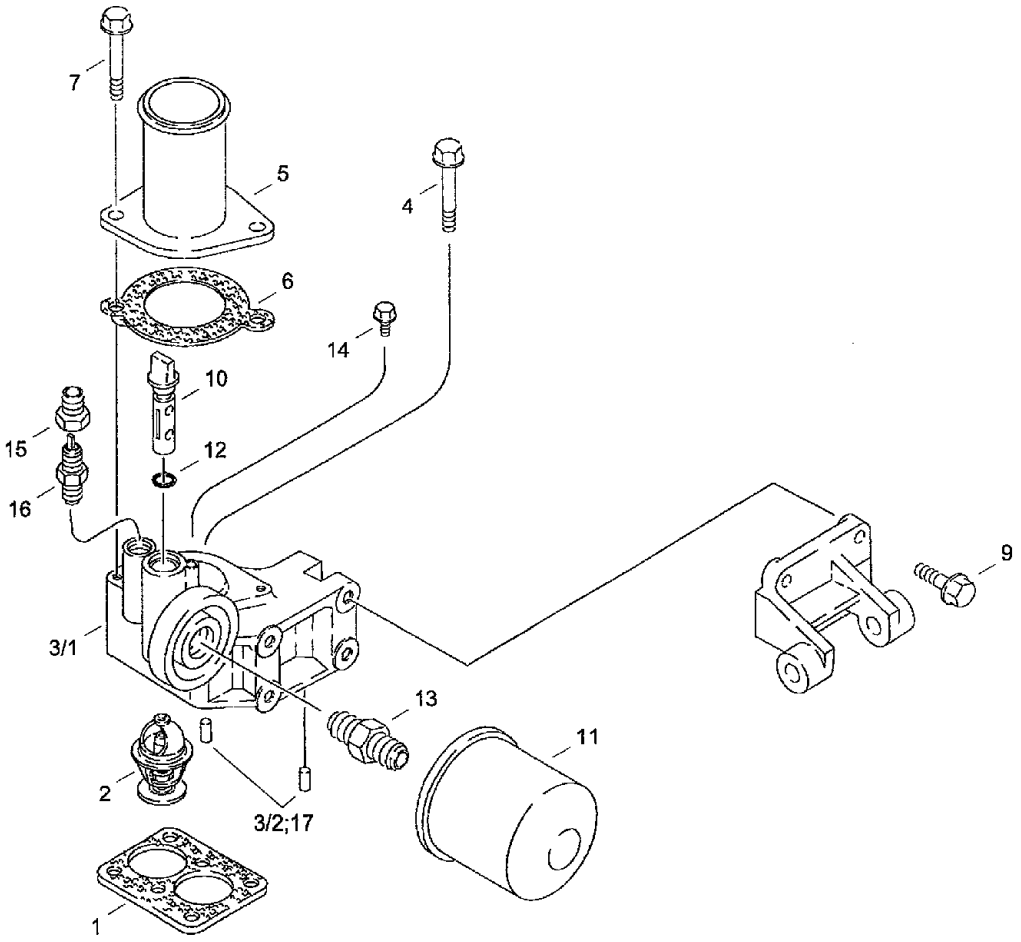

CF80 CASE IH CROSS FLOW COMBINE

K370 ENGINE- FILTER, WATER, THERMOSTAT

Ref	Part Number	Qty	Description
1	J914310	1	GASKET, Seal F.GEHAUSE
2	J928639	1	THERMOSTART, Thermostat
3	J926509	1	HOUSING, Housing
4	845-8080	2	BOLT, Hex Flg, M8 x 80, 8.8, Hex bolt M8x80
5	J912800	1	CONNECTION, Flange
6	J918779	1	GASKET, Seal F.FLANSCH
7	845-8095	2	BOLT, Hex Flg, M8 x 95, 8.8, Hex bolt M8x95
9	845-8025	4	SCREW, Hex Flg, M8 x 25, 8.8, Hex bolt M8x25 BM-042 8.8-PHC
10	294926A1	1	VALVE, SHUT-OFF, Shut-off valve
11	A77544	1	FILTER, Filter BW 5071
12	238-5111	1	O-RING, -111, 70 Duro, .424" ID x .103" Thk, O-ring 0.424ZOLLx0.103ZOLL
13	A77623	1	ADAPTER, Adapter
14	845-6010	1	BOLT, Hex Flg, M6 x 10, 8.8, Full Thd, Hex bolt M6x10
15	J911925	1	COUPLING, Coupling
16	J911901	1	VALVE, CHECK, Valve check
17	180811A1	2	PIN, ROLL, Roll pin

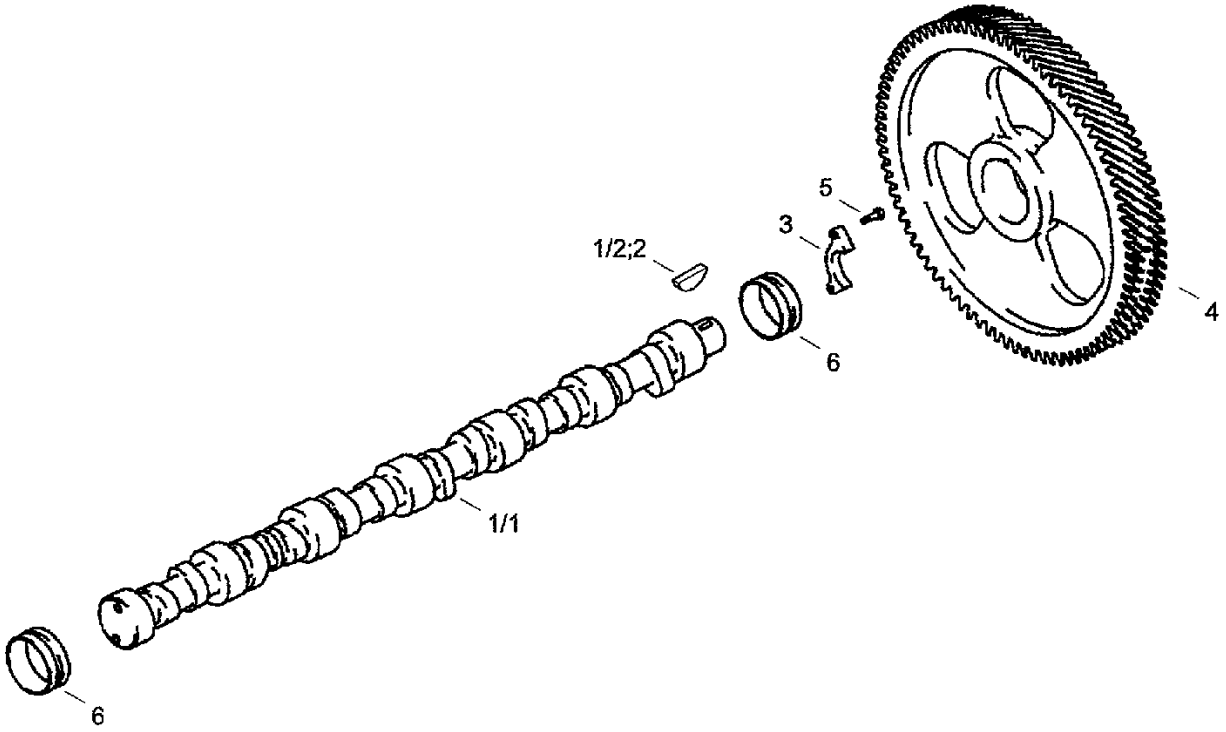
5
3
1/2;2
4
6
1/1
6

CF80 CASE IH CROSS FLOW COMBINE

K380 ENGINE- CAMSHAFT

Ref	Part Number	Qty	Description
1	J923478	1	CAMSHAFT, Camshaft
2	836-4065	1	WOODRUFF KEY, Woodruff key 4x6,5 DIN6888
3	J927155	1	SUPPORT, Support
4	J918777	1	PINION, Pinion
5	J900227	2	BOLT, Special bolt M8x22
6	J945329	7	BUSHING, Bushing

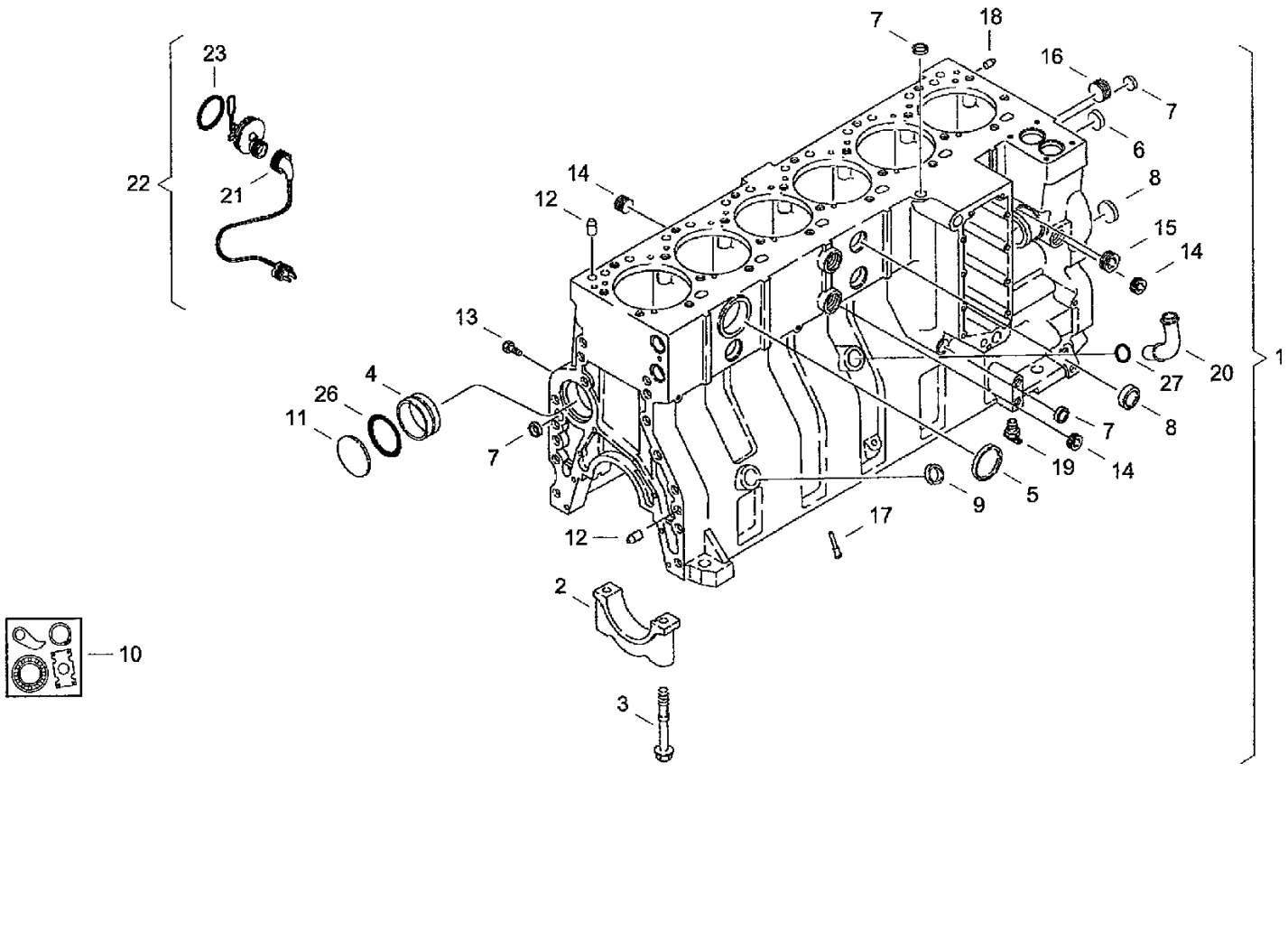
1
2
3
4
5
6
7
8
9
10
11
12
13
14
15
16
17
18
19
20
21
22
23
26
27

CF80 CASE IH CROSS FLOW COMBINE

K390 ENGINE- CYLINDER BLOCK

Ref	Part Number	Qty	Description
1	J934900	k	ENGINE, SHORT, Block
2	J917313		CAP, Cap
4	J945329		BUSHING, Bushing
5	A77782	58mm	PLUG, Expansion plug
6	A77586	43mm	PLUG, Expansion plug
7	A77506	34mm	PLUG, Expansion plug, 21 mm
8	J905401	35mm	PLUG, Expansion plug
9	A77530	30mm	PLUG, Expansion plug
10	A77885		PACKAGE, REPAIR, Repair-kit
11	41-3044	70mm	PLUG, Exp, 2 3/4", Expansion plug
12	J901846		PIN, Bolt
16	A77533	1 PT	PLUG, Plug
17	J928031		NOZZLE, Nozzle
18	J900257	16mm	PIN, Bolt
20	J931973		TUBE, Cpl. pipe
23	J910517		O-RING, O-ring
26	J926048	66mm	O-RING, O-ring
27	J931824		GASKET, O-ring

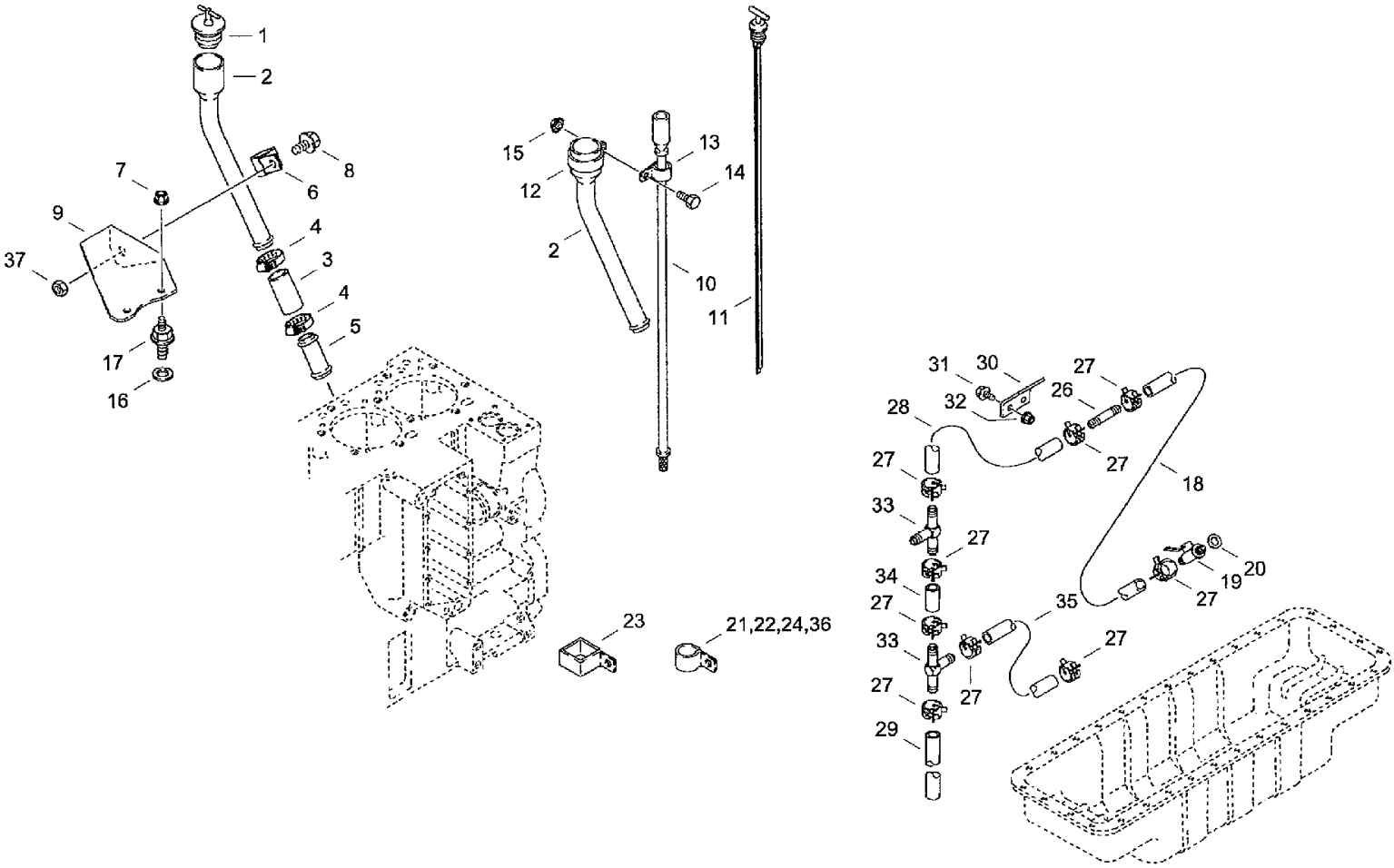
1
2
7
8
6
9
4
37
3
4
5
17
16
15
13
12
14
2
10
11
31
30
27
32
26
28
27
27
18
27
33
27
34
19
20
27
27
35
33
27
27
27
27
29
23
21,22,24,36

CF80 CASE IH CROSS FLOW COMBINE

K400(01) ENGINE- OIL SYSTEM

Ref	Part Number	Qty	Description
1	A77424	1	PLUG, Cap
2	J914019	1	TUBE, Cpl. pipe
3	A77661	1	HOSE ASSY., Hose 64mm
4	003792777	2	CLAMP, Hose clip AL32-50-W2-1 DIN3017
5	J914163	1	TUBE, Cpl. pipe
6	J914022	1	PIPE CLAMP, Clamp
7	825-2406	2	NUT, M6 x 1, Flg, Cl 8,
8	845-8025	1	SCREW, Hex Flg, M8 x 25, 8.8, Hex bolt M8x25 BM-042 8.8-PHC
9	J932598	1	SUPPORT, Support
10	J931265	1	TUBE, Cpl. pipe
11	J931266	1	DIPSTICK, Oil dip stick
12	118788A1	1	CLAMP, Clamp
13	A77508	1	CLAMP, Clamp 7/16ZOLL
14	844-8016	1	BOLT, Hex Flg, M8 x 16, 8.8, Hex bolt M8x16 DIN6921 8.8
15	829-1408	1	NUT, M8, Cl 10, Hex nut M8ISO403210
16	J918189	2	RING, PACKING, Washer
17	J931061	2	SCREW, Stay bolt
18	1329978C3	1	HOSE, Hose 430mm
19	1330429C1	1	VALVE, DRAIN, Drain cock
20	J920773	1	WASHER, SEALING, Washer
21	515-23317	1	CLAMP, 1 1/4", Insul, 3/8" Bolt, Clamp 31,7
22	515-23381	1	CLAMP, 1 1/2", Insul, 3/8" Bolt, Clamp 38,1
23	1301387C2	2	CLIP, Clamp 2ZOLL
24	515-25476	3	CLAMP, 1 7/8", Insul, 1/2" Bolt, Clamp 47,6
26	1301342C1	1	FITTING, Adapter

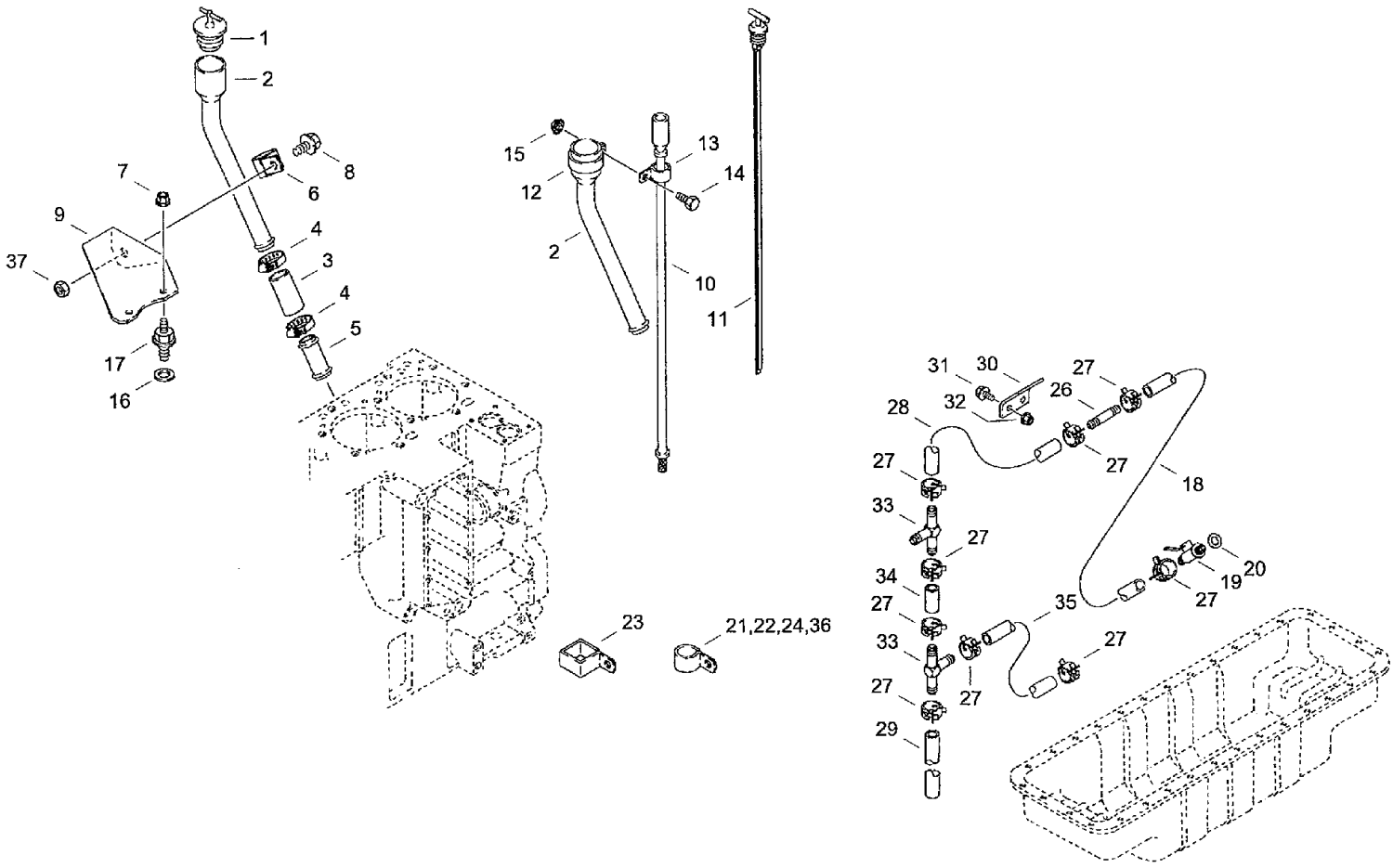
1
2
7
8
6
9
4
37
3
4
5
17
16
15
13
12
14
2
10
11
23
21,22,24,36
31
30
27
26
32
28
27
27
18
33
27
34
27
35
19
20
27
33
27
27
27
29

CF80 CASE IH CROSS FLOW COMBINE

K400(02) ENGINE- OIL SYSTEM

Ref	Part Number	Qty	Description
27	1954736C1	11	CLAMP, Clamp NR.24
28	293339A1	1	HOSE, Hose 1100mm
29	293339A1	1	HOSE, Hose 1100mm
30	1977212C1	1	ANGLE, Support
31	409-7616	2	BOLT, Hex Flg, 3/8"-16 x 1", Serr, Hex bolt 3/8ZOLL-16x1ZOLL
32	231-5146	2	NUT, Flg, USR, 3/8"-16, Hex nut 3/8ZOLL-16
33	1977169C1	2	TEE, Piece
34	1977294C3	1	HOSE, LARGE, Hose 580mm
35	29338A1	1	Hose 185mm
36	97249C1	1	CLIP, Clip
37	829-1408	2	NUT, M8, Cl 10, Hex nut M8 ISO4032 10

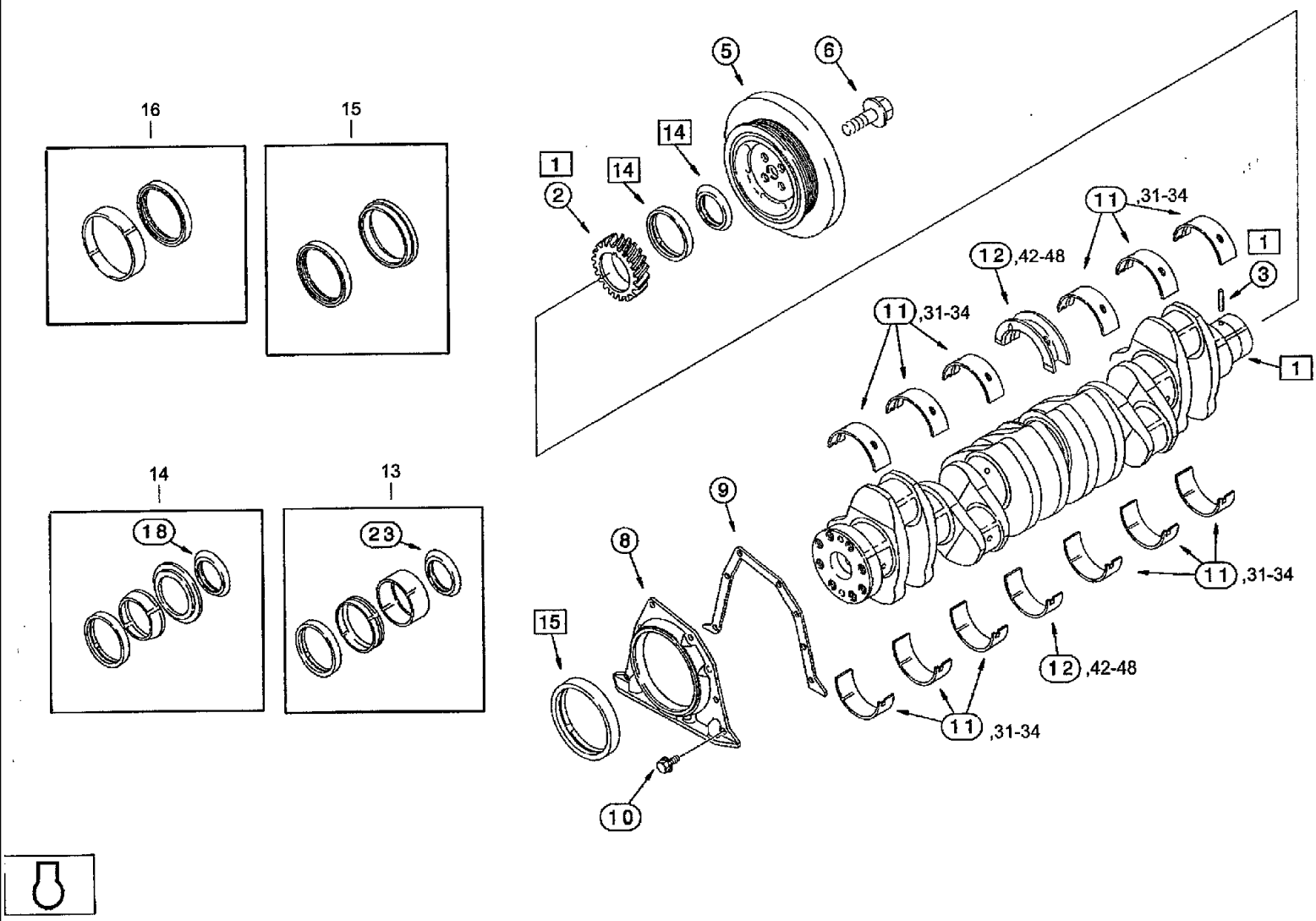
16
15
14
13
18
23
5
6
14
1
14
2
11 ,31-34
1
12 ,42-48
3
11 ,31-34
1
9
8
15
11 ,31-34
12 ,42-48
11 ,31-34
10

CF80 CASE IH CROSS FLOW COMBINE

K410(01) ENGINE- CRANKSHAFT

Ref	Part Number	Qty	Description
1	J918986	1	CRANKSHAFT, Crankshaft k
2	J918776	1	GEAR, Pinion
3	J904483	1	PIN, Dowel pin
5	J925568	1	DAMPER, Pulley
6	J906733	4	BOLT, Flange bolt M14x35
8	J933384	1	COVER, REAR, Retainer
9	J914301	1	GASKET, Seal
10	845-6015	8	BOLT, Hex Flg, M6 x 15, 8.8, Full Thd, Hex bolt M6x15
11	A77711	6	BEARING LINER, Bearing STANDARD
12	A77843	1	BEARING LINER, Bearing STANDARD
13	A77808	1	KIT, SERVICE, Sleeve kit F.KURBELWELLE VORN
14	A77790	1	KIT, SEALS, Seal kit F.KURBELWELLE VORN
15	J353978	1	PACKAGE, SEALS, Seal kit F.KURBELWELLE HINTEN
16	A77810	1	KIT, SERVICE, Sleeve kit F.KURBELWELLE HINTEN
18	J918113	1	SHIELD, Shield
23	J924987	1	SHIELD, Shield
31	A77712	6	BEARING LINER, Bearing -0,25mm
32	A77713	6	BEARING LINER, Bearing -0,50mm
33	A77714	6	BEARING LINER, Bearing -0,75mm
34	A77715	6	BEARING LINER, Bearing -1,00mm
42	A77844	1	BEARING LINER, Bearing -0,25mm
43	A77845	1	BEARING LINER, Bearing -0,50mm
44	A77846	1	BEARING LINER, Bearing -0,75mm
45	A77847	1	BEARING LINER, Bearing -1,00mm
46	A77848	1	BEARING, CRANKSHAFT, Bearing +0,25mm

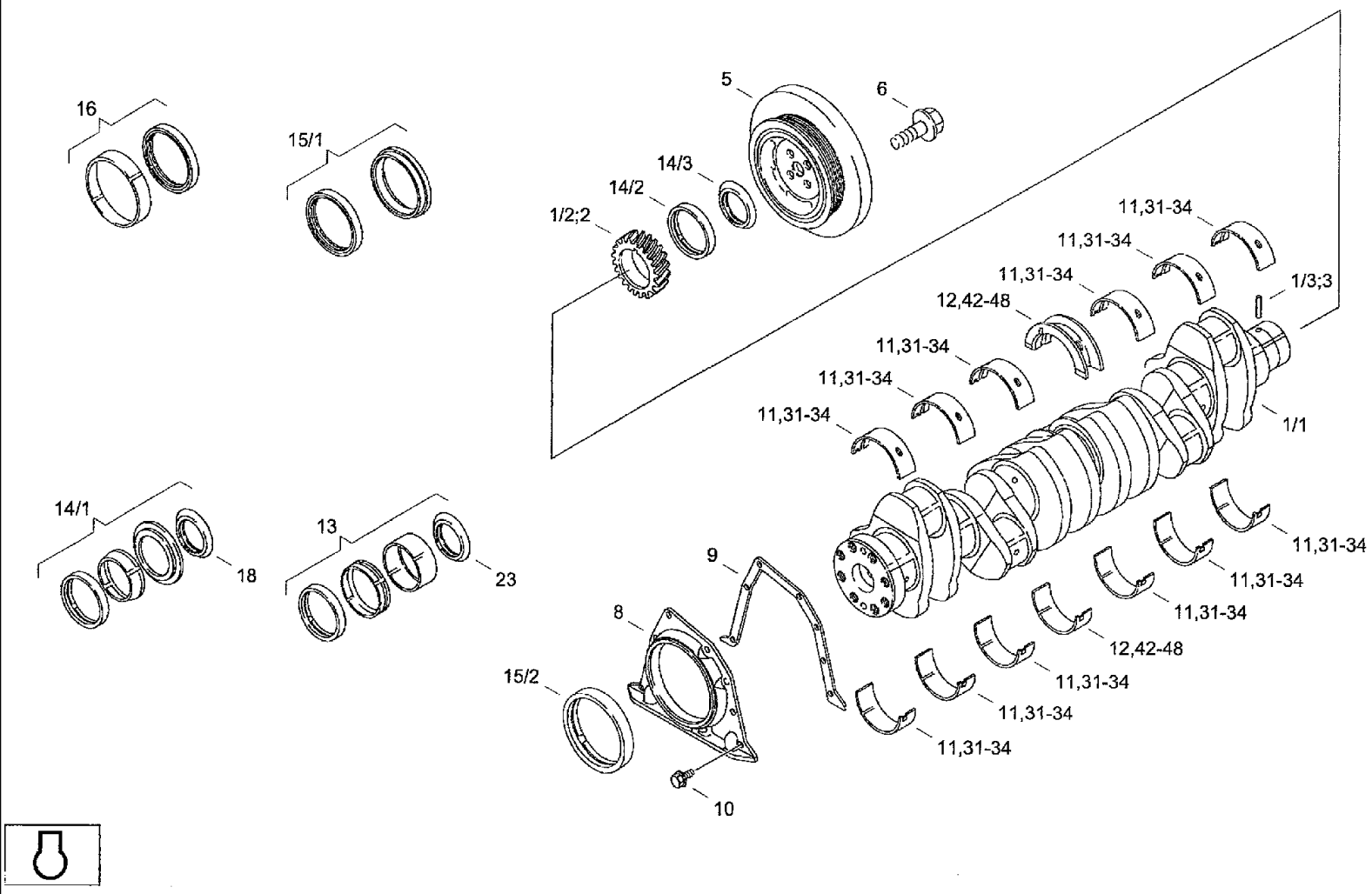
16
15/1
5
6
14/3
14/2
1/2;2
11,31-34
11,31-34
11,31-34
12,42-48
1/3;3
11,31-34
11,31-34
11,31-34
1/1
14/1
18
13
23
9
8
15/2
10
11,31-34
11,31-34
11,31-34
12,42-48
11,31-34
11,31-34
11,31-34
11,31-34

CF80 CASE IH CROSS FLOW COMBINE

K410(02) ENGINE- CRANKSHAFT

Ref	Part Number	Qty	Description

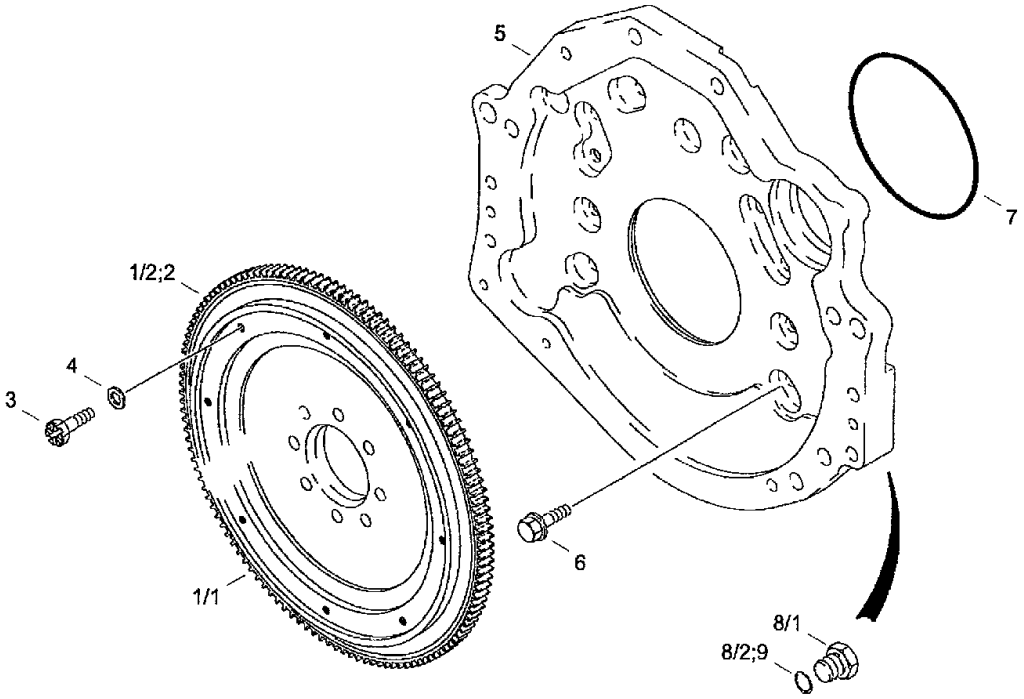
5
7
1/2;2
4
3
6
1/1
8/1
8/2;9

CF80 CASE IH CROSS FLOW COMBINE

K420 ENGINE- FLYWHEEL, BACKING PLATE

Ref	Part Number	Qty	Description
1	J906809	1	FLYWHEEL, Flywheel k
2	J902127	1	FLYWHEEL, Pinion
3	J901395	8	SCREW, Bolt M 12x32
4	J900269	8	WASHER, Special washer
5	J906689	1	HOUSING, Flywheel housing
6	854-12040	10	BOLT, Hex Flg, M12 x 40, 10.9, Hex bolt M 12x40 BM-042 10.9-PHC
7	J912473	1	O-RING, O-ring
8	J910248	1	PLUG, Plug
9	238-5212	1	O-RING, -212, 70 Duro, .859" ID x .139" Thk, O-ring 0.859ZOLLxd.139ZOLL

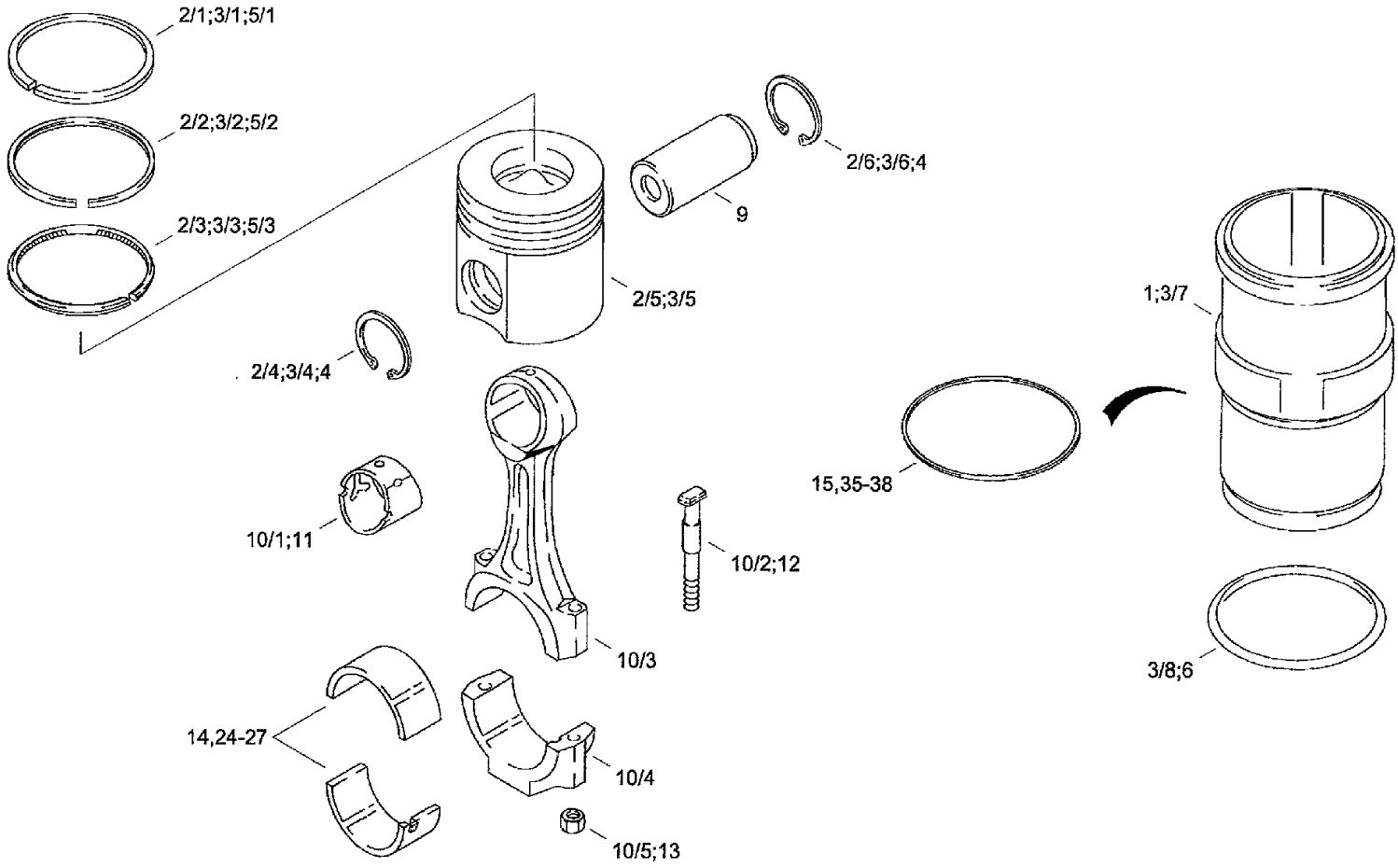
2/1;3/1;5/1
2/2;3/2;5/2
2/3;3/3;5/3
2/6;3/6;4
9
2/5;3/5
1;3/7
2/4;3/4;4
15,35-38
10/1;11
10/2;12
10/3
3/8;6
14,24-27
10/4
10/5;13

CF80 CASE IH CROSS FLOW COMBINE

K430 ENGINE- PISTON, CONNECTING ROD

Ref	Part Number	Qty	Description
1	J944344	1	SLEEVE CYLINDER, Sleeve
2	A77853	1	KIT, PISTON & RINGS, Piston ring SATZ
3	A77912	6	PACKAGE, REPAIR, Piston SATZ
4	100-21175	2	RING, SNAP, 1.75", Int, #175, 1.75", Int, #175, 0.706ZOLL X0.62ZOLL
5	J802429	1	KIT, PISTON RINGS, Piston ring SATZ
6	J907177	1	O-RING, O-ring
9	J901597	6	PIN, Bolt
10	J901383	6	ROD, CONNECTING, Rod assy
11	J913990	1	BEARING, Bushing
12	J928870	2	BOLT, Bolt
13	J934864	2	NUT, Nut
14	A77563	6	BEARING LINER, Con. rod bearing STANDARD
15	J924445	1	SHIM, Shim 0,254mm
24	A77564	6	BEARING LINER, Con. rod bearing -0,25mm
25	A77565	6	BEARING LINER, Con. rod bearing -0,50mm
26	A77566	6	BEARING LINER, Con. rod bearing -0,75mm
27	A77567	6	BEARING LINER, Con. rod bearing -1,00mm
35	J924446	1	SHIM, Shim 0,381mm
36	J924447	1	SHIM, Shim 0,508mm
37	J924448	1	SHIM, Shim 0,762mm
38	J924449	1	SHIM, Shim 1,016mm

K440 ENGINE- SEAL KIT [1]

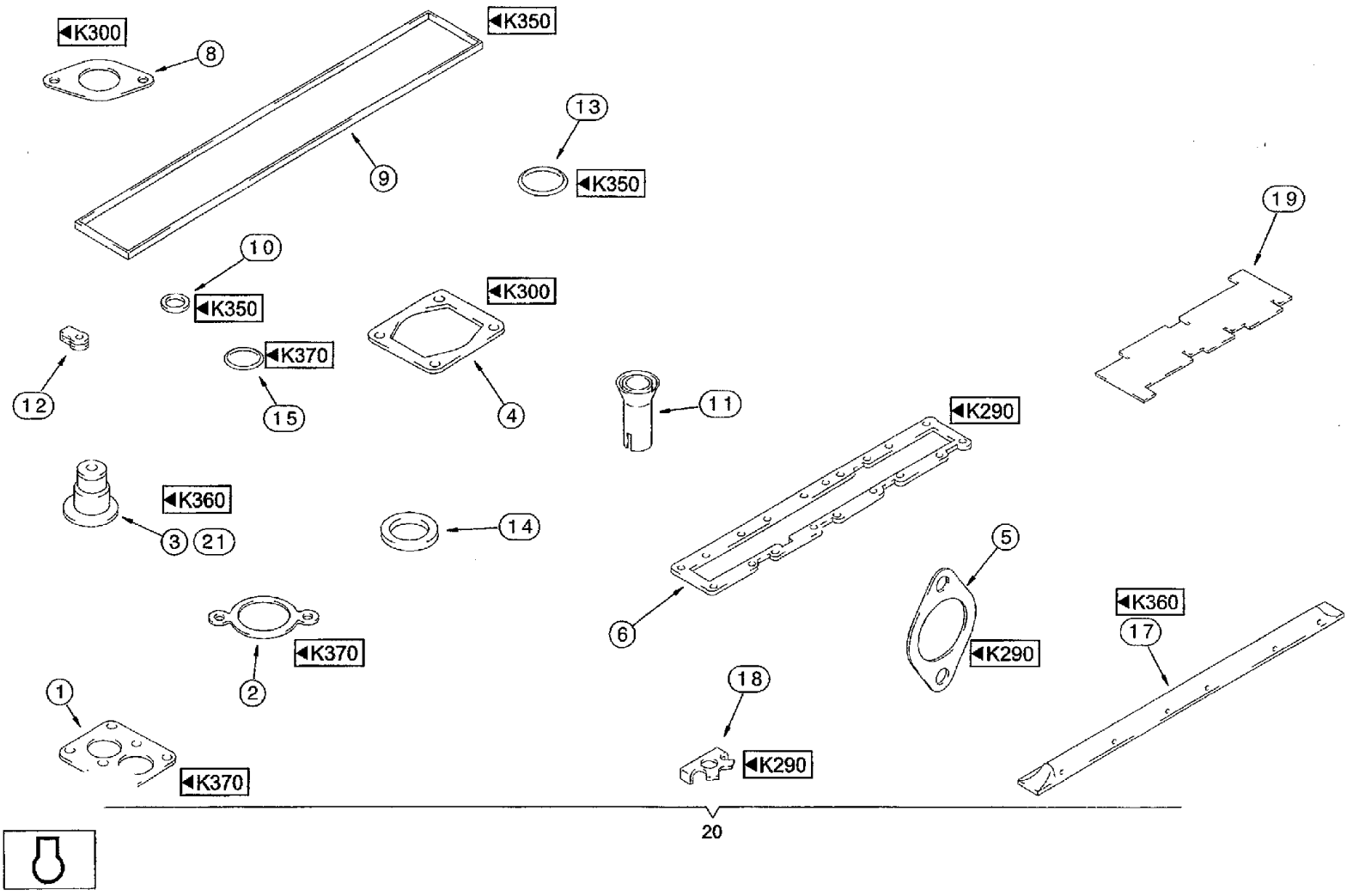

CF80 CASE IH CROSS FLOW COMBINE

K440 ENGINE- SEAL KIT [1]

Ref	Part Number	Qty	Description
1	J914310	1	GASKET, Seal F.GEHAUSE
2	J918779	1	GASKET, Seal F.FLANSCH
3	J915707	6	SEAL, Seal
4	J911941	1	GASKET, Seal F.KROMMER
5	J932063	1	GASKET, MANIFOLD, Seal F.KRUMMER
6	J914311	1	GASKET, Seal F.VERTEILER
8	J942725	1	GASKET, Seal
9	J905449	1	SEAL, RUBBER, Seal
10	J910824	6	O-RING, O-ring
11	J909886	6	SEAL, Sleeve
12	J903380	7	SEAL, Seal
13	238-5115	1	O-RING, -115, 70 Duro, .674" ID x .103" Thk, O-ring 0,674ZOLLxO,103ZOLL
14	J923261	6	WASHER, Seal 2,5mm
15	238-5111	1	O-RING, -111, 70 Duro, .424" ID x .103" Thk, O-ring 0,424ZOLLxO,103ZOLL
17	J919677	1	MANIFOLD, Manifold
18	J914708	12	PLATE, LOCKING, Plate
19	J823921	1	GAUGE, Gauge
20	A77872	1	KIT, GASKET, Seal kit
21	J927642	6	SEAL, Seal

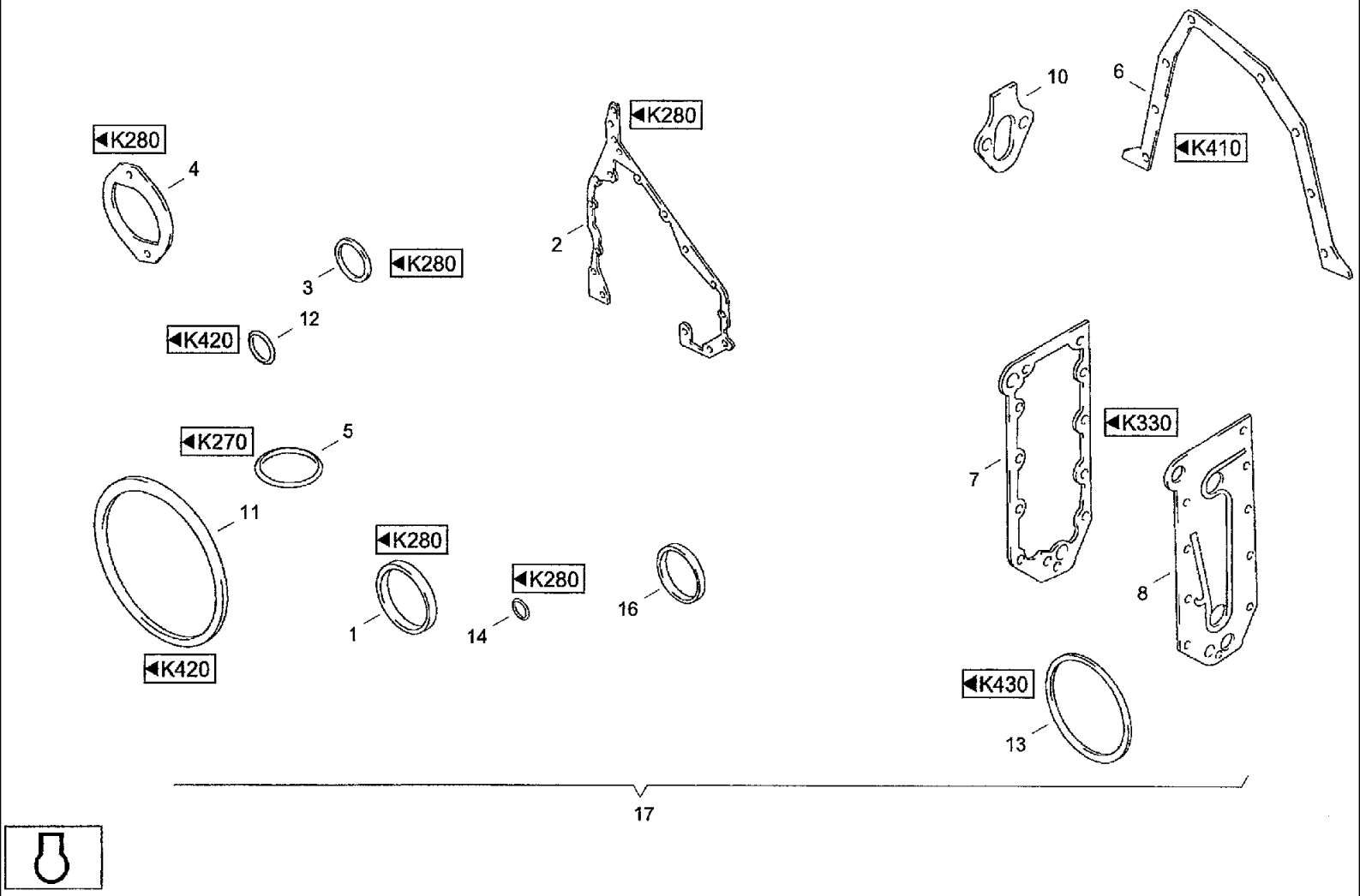
K280
4
K280
3
K420
12
K280
2
10
6
K410
K270
5
11
K420
K280
1
K280
14
16
K330
7
8
K430
13
17

CF80 CASE IH CROSS FLOW COMBINE

K450 ENGINE- SEAL KIT [2]

Ref	Part Number	Qty	Description
1	J903475	1	SEAL, Seal
2	J929253	1	GASKET, Seal F.GEHAUSE
3	J915772	1	SEALRING, Seal
4	J931608	1	GASKET, Seal F.DECKEL
5	J902089	1	SEAL, O-ring
6	J914301	1	GASKET, Seal
7	J918174	1	GASKET, Seal F.KERN
8	J929011	1	GASKET, Seal F.ABDECKUNG
10	J931348	1	GASKET, Seal
11	J912473	1	O-RING, O-ring
12	238-5212	1	O-RING, -212, 70 Duro, .859" ID x .139" Thk, O-ring 0.859 'xO. 139""
13	J907177	6	O-RING, O-ring
14	J913994	1	O-RING, O-ring
16	J926722	1	SEAL, Ring
17	A77855	1	KIT, Seal kit

CF80 CASE IH CROSS FLOW COMBINE

K460 ENGINE- FUEL FILTER, FUEL PUMP

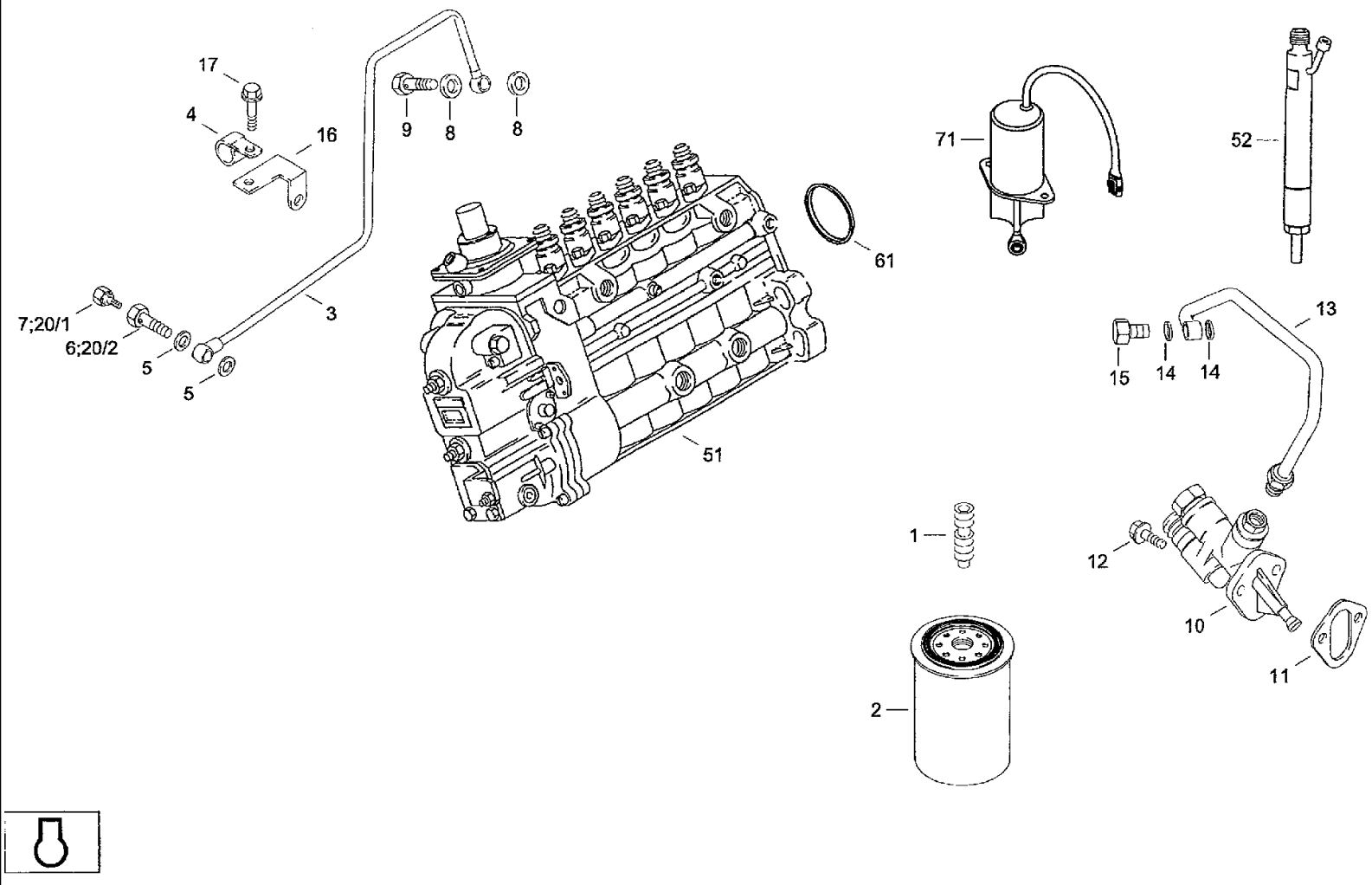

CF80 CASE IH CROSS FLOW COMBINE

K460 ENGINE- FUEL FILTER, FUEL PUMP

Ref	Part Number	Qty	Description
1	J925955	1	ADAPTER, Adapter
2	J903640	1	FILTER, FUEL, Fuel filter DGM/K23
3	J930766	1	PIPE, Cpl. pipe
4	J914711	1	CLIP, Clamp
5	J918191	2	RING, PACKING, Washer 12x18x1
6	J911446	1	SCREW, Bolt M 12x24
7	J905403	1	SCREW, Screw
8	J918192	2	RING, PACKING, Washer 14x20x1
9	J924725	1	BOLT, BANJO, Bolt
10	J933253	1	PUMP, FEED, Pump F.KRAFTSTOFF
11	J931348	1	GASKET, Seal
12	844-8020	2	BOLT, Hex Flg, M8 x 20, 8.8,
13	J918539	1	TUBE, Cpl. pipe
14	J918191	2	RING, PACKING, Washer 12x18x1
15	J916361	1	BOLT, Bolt M 12x24
16	J930375	1	BRACE, Stay
17	J924962	2	BOLT, Flange bolt M8x16
20	J905860	1	SCREW, Bolt k
51	J936829	1	PUMP, FUEL INJECTION, Injection pump 300HP
52	J931945	6	INJECTOR ASSY., Injection nozzle k, 300HP
61	J924605	1	SEAL, Seal
71	31339883	1	SOLENOID, Stop magnet F.EINSPRITZPUMPE